© Siemens 2022

SIEMENS

Catalog
D 32

Edition
February
2022

MOTION CONTROL DRIVES

SINAMICS S210
Servo Drive System

siemens.com/d32

© Siemens 2022

Related catalogs

Motion Control Drives D 31.1
SINAMICS Converters for Single-Axis Drives
Built-In Units

PDF (E86060-K5531-A111-A2-7600)

Motion Control Drives D 31.2
SINAMICS Converters for Single-Axis Drives
Distributed Converters

PDF (E86060-K5531-A121-A2-7600)

Motion Control Drives D 31.5
SINAMICS Converters for Single-Axis Drives
SINAMICS G120X infrastructure converters
for HVAC/Water/Wastewater

PDF (E86060-K5531-A151-A3-7600)

Motion Control Drives D 34
SIMATIC MICRO-DRIVE
Servo Drive System

PDF (E86060-K5534-A101-A2-7600)

SINAMICS S120 D 21.3
Chassis Format Converter Units
Chassis-2 Format Converter Units
Cabinet Modules, Cabinet Modules-2
SINAMICS S150
Converter Cabinet Units
E86060-K5521-A131-A7-7600

Motion Control Drives D 21.4
SINAMICS S120 and SIMOTICS

E86060-K5521-A141-A1-7600

SIMOTICS S-1FG1 D 41
Servo geared motors
Helical, Parallel shaft, Bevel and
Helical worm geared motors

PDF (E86060-K5541-A101-A5-7600)

SIMOTICS GP, SD, XP, DP D 81.1
Low-Voltage Motors
Type series 1FP1, 1LE1, 1LE5, 1MB1, 1MB5, 1PC1
Frame sizes 63 to 450
Power range 0.09 to 1000 kW
PDF (E86060-K5581-A111-B5-7600)

SIMOGEAR D 50.1
Geared Motors
Helical, parallel shaft, bevel, helical worm
and worm geared motors

PDF (E86060-K5250-A111-A8-7600)

Motion Control System PM 21
SIMOTION
Equipment for Production Machines

E86060-K4921-A101-A4-7600

Industrial Controls IC 10
SIRIUS

PDF (E86060-K1010-A101-B3-7600)

Industrial Controls IC 10 AO
SIRIUS Classic

PDF (E86060-K1010-A191-A5-7600)

Low-Voltage Power Distribution and LV 10
Electrical Installation Technology
SENTRON • SIVACON • ALPHA
Protection, Switching, Measuring and Monitoring
Devices, Switchboards and Distribution Systems
PDF (E86060-K8280-A101-B4-7600)

SIMATIC ST 70
Products for
Totally Integrated Automation

PDF (E86060-K4670-A101-B8-7600)

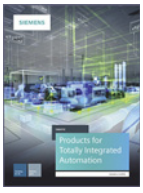

SIMATIC HMI / ST 80/ST PC
PC-based Automation
Human Machine Interface Systems
PC-based Automation

PDF (E86060-K4680-A101-C9-7600)

Industrial Communication IK PI
SIMATIC NET

E86060-K6710-A101-B8-7600

Industry Mall
Information and Ordering Platform
on the internet:

www.siemens.com/industrymall

© Siemens 2022

SIEMENS

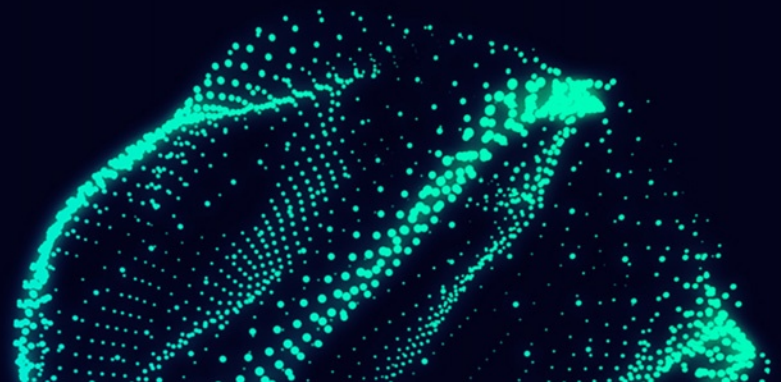

Catalog
D 32

Edition
February
2022

MOTION CONTROL DRIVES

SINAMICS S210

Servo Drive System

siemens.com/d32

Dear Customer,

We are pleased to present you with the new Catalog D 32 · February 2022. The catalog provides a comprehensive overview of the SINAMICS S210 servo drive system.
The SINAMICS S210 servo drive system consists of a SINAMICS S210 servo converter, a SIMOTICS S servomotor and a matching One Cable Connection (OCC).

The single-axis AC/AC servo converter system stands out due to its high performance and dynamic response for mid-range Motion Control applications. In addition to updates and technical modifications, the new edition of the catalog has also been supplemented with the SIMOTICS S-1FT2 servo planetary geared motors, individual variants of the SIMOTICS S-1FK2 and S-1FT2 servomotors and with the SIMOTICS S-1FS2 servomotors shaft height 80.

The products listed in this catalog are also included in the Industry Mall. Please contact your local Siemens office for additional information.

Up-to-date information about SINAMICS S210 is available on the internet at: www.siemens.com/sinamics-s210

You can access our Industry Mall online at: www.siemens.com/industrymall

Your personal contact will be happy to receive your suggestions and recommendations for improvement.
You can find your representative in our Personal Contact database at: www.siemens.com/automation-contact

We hope that you will often enjoy using Catalog D 32 · February 2022 as a selection and ordering reference document and wish you every success with our products and solutions.

With kind regards

Frank Golüke
Vice President
General Motion Control
Siemens AG, Digital Industries, Motion Control

© Siemens 2022

© Siemens 2022

SINAMICS S210 Servo Drive System

Motion Control Drives

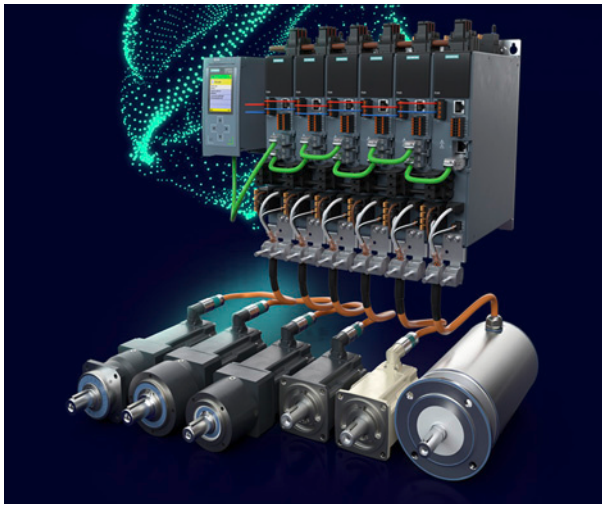

Catalog D 32 · February 2022

Supersedes:
Catalog D 32 · July 2021

Refer to the Industry Mall for current updates of this catalog:
www.siemens.com/industrymall

Please contact your local Siemens branch.

© Siemens 2022

Click on an Article No. in the catalog PDF to call it up in the Industry Mall and to obtain all the information.

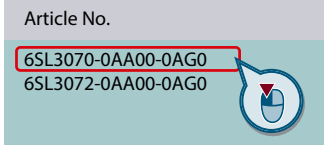

Or directly on the Internet, e.g.
www.siemens.com/product?6SL3070-0AA00-0AG0

The products and systems described in this catalog are manufactured/distributed under application of a certified quality management system in accordance with EN ISO 9001. The certificate is recognized by all IQNet countries.

System overview 1

SINAMICS S210 servo drive 2

SIMOTICS S servomotors and servo planetary geared motors for SINAMICS S210 3

MOTION-CONNECT connection systems 4

Engineering tools 5

Services and documentation 6

Appendix 7

© Siemens 2022

Integrated Drive Systems

Faster on the market and in the black with Integrated Drive Systems

Integrated Drive Systems are Siemens' trendsetting answer to the high degree of complexity that characterizes drive and automation technology today. The world's only true one-stop solution for entire drive systems is characterized in particular by its threefold integration: Horizontal, vertical, and lifecycle integration ensure that every drive system component fits seamlessly into the whole system, into any automation environment, and even into the entire lifecycle of a plant.

The outcome is an optimal workflow – from engineering all the way to service that entails more productivity, increased efficiency, and better availability. That's how Integrated Drive Systems reduce time to market and time to profit.

Horizontal integration

Integrated drive portfolio: The core elements of a fully integrated drive portfolio are frequency converters, motors, couplings, and gear units. At Siemens, they're all available from a single source. Perfectly integrated, perfectly interacting. For all power and performance classes. As standard solutions or fully customized. No other player in the market can offer a comparable portfolio. Moreover, all Siemens drive components are perfectly matched, so they are optimally interacting.

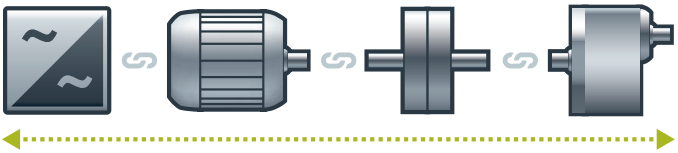

You can boost the availability of your application or plant to up to

99 %*

*e.g., conveyor application

Vertical integration

Thanks to **vertical integration**, the complete drive train is seamlessly integrated in the entire automation environment – an important prerequisite for production with maximum value added. Integrated Drive Systems are part of Totally Integrated Automation (TIA), which means that they are perfectly embedded into the system architecture of the entire industrial production process. This enables optimal processes through maximum communication and control.

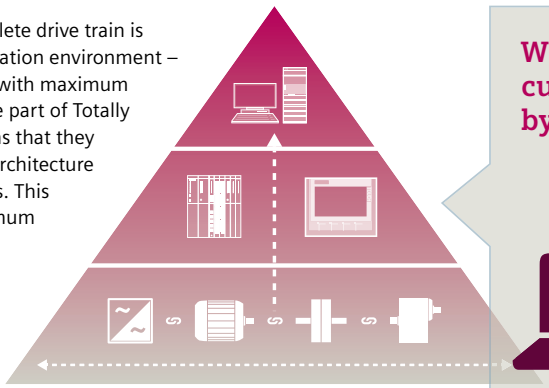

With TIA Portal you can cut your engineering time by up to

30 %

Lifecycle integration

Lifecycle integration adds the factor of time: Software and service are available for the entire lifecycle of an Integrated Drive System. That way, important optimization potential for maximum productivity, increased efficiency, and highest availability can be leveraged throughout the system's lifecycle – from planning, design, and engineering to operation, maintenance, and all the way even to modernization.

With Integrated Drive Systems, assets become important success factors. They ensure shorter time to market, maximum productivity and efficiency in operation, and shorter time to profit.

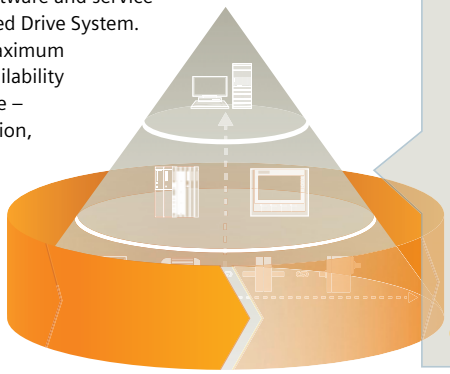

With Integrated Drive Systems you can reduce your maintenance costs by up to

15 %

www.siemens.com/ids

© Siemens 2022

1/2	**The SINAMICS converter family**
1/6	**Drive selection**
1/7	**SINAMICS S210 servo drive system**
1/13	Order overview
1/13	with SIMOTICS S-1FK2 servomotors
1/18	with SIMOTICS S-1FT2 servomotors
1/23	with SIMOTICS S-1FS2 servomotors
1/24	with SIMOTICS S-1FK2 and 1FT2 servo planetary geared motors
1/25	Accessories
1/28	**SINAMICS S210 starter kit**

© Siemens 2022

Overview

Integration in automation

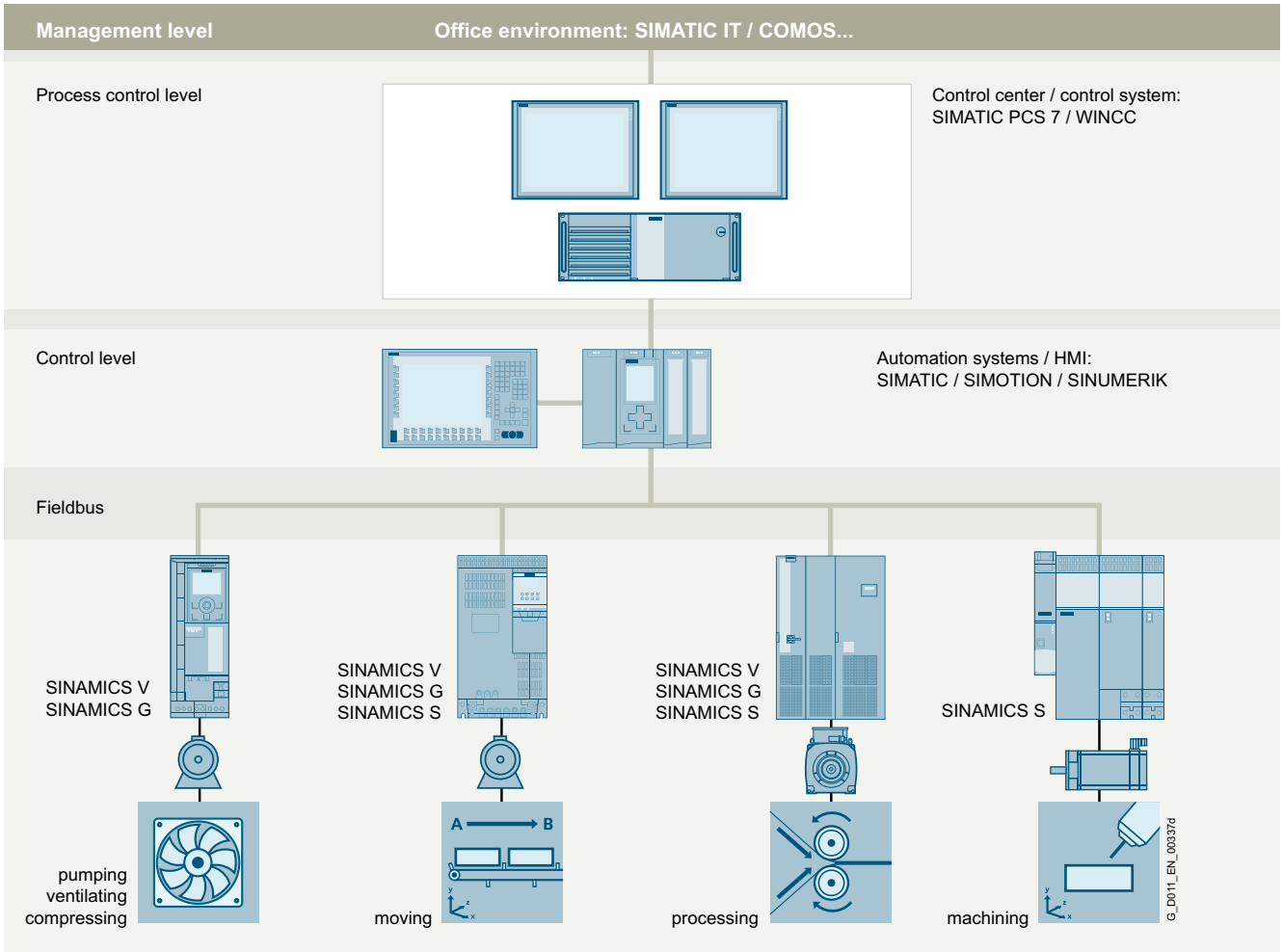

Totally Integrated Automation and communication

SINAMICS is an integral component of the Siemens "Totally Integrated Automation" concept. Integrated SINAMICS systems covering configuration, data storage, and communication at automation level ensure low-maintenance solutions with the SIMATIC, SIMOTION and SINUMERIK control systems.

Depending on the application, the appropriate variable frequency drives can be selected and incorporated in the automation concept. With this in mind, the drives are clearly subdivided into their different applications. A wide range of communication options (depending on the drive type) are available for establishing a communication link to the automation system:

- PROFINET
- PROFIBUS
- EtherNet/IP
- Modbus TCP
- Modbus RTU
- AS-Interface
- BACnet MS/TP

Applications

SINAMICS is the comprehensive converter family from Siemens designed for machine and plant engineering applications. SINAMICS offers solutions for all drive tasks:

- Simple pump and fan applications in the process industry
- Demanding single drives in centrifuges, presses, extruders, elevators, as well as conveyor and transport systems
- Drive line-ups in textile, plastic film, and paper machines as well as in rolling mill plants
- Highly dynamic servo drives for machine tools, as well as packaging and printing machines

© Siemens 2022

Overview

SINAMICS as part of the Siemens modular automation system

Innovative, energy-efficient and reliable drive systems and applications as well as services for the entire drive train

The solutions for drive technology place great emphasis on the highest productivity, energy efficiency and reliability for all torque ranges, performance and voltage classes.

Siemens offers not only the right innovative variable frequency drive for every drive application, but also a wide range of energy-efficient low-voltage motors, geared motors, explosion-protected motors and high-voltage motors for combination with SINAMICS.

Furthermore, Siemens supports its customers with global pre-sales and after-sales services, with over 295 service points in 130 countries – and with special services e.g. application consulting or motion control solutions.

Energy efficiency

Energy management process

Efficient energy management consultancy identifies the energy flows, determines the potential for making savings and implements them with focused activities.

Almost two thirds of the industrial power requirement is from electric motors. This makes it all the more important to use drive technology permitting energy consumption to be reduced effectively even in the configuration phase, and consequently to optimize plant availability and process stability. With SINAMICS, Siemens offers powerful energy efficient solutions which, depending on the application, enable a significant reduction in electricity costs.

© Siemens 2022

Overview

Up to 70 % potential for savings using variable-speed operation

SINAMICS enables great potential for savings to be realized by controlling the motor speed. In particular, huge potential savings can be recovered from pumps, fans and compressors which are operated with mechanical throttle and valves. Here, changing to variable-speed drives brings enormous economic advantages. In contrast to mechanical control systems, the power consumption at partial load operation is always immediately adjusted to the demand at that time. So energy is no longer wasted, permitting savings of up to 60 % – in exceptional cases even up to 70 %. Variable-speed drives also offer clear advantages over mechanical control systems when it comes to maintenance and repair. Current spikes when starting up the motor and strong torque surges become things of the past – and the same goes for pressure waves in pipelines, cavitation or vibrations which cause sustainable damage to the plant. Smooth starting and ramp-down relieve the load on the mechanical system, ensuring a significantly longer service life of the entire drive train.

Regenerative feedback of braking energy

In conventional drive systems, the energy produced during braking is converted to heat using braking resistors. Energy produced during braking is efficiently recovered to the supply system by versions of SINAMICS G and SINAMICS S drives with regenerative feedback capability and these devices do not therefore need a braking resistor. This permits up to 60 % of the energy requirement to be saved, e.g. in lifting applications. Energy which can be reused at other locations on a machine. Furthermore, this reduced power loss simplifies the cooling of the system, enabling a more compact design.

Energy transparency in all configuration phases

Early on, in the configuration phase, the SIZER for Siemens Drives engineering tool (integrated into TIA Selection Tool) provides information on the specific energy requirement. The energy consumption across the entire drive train is visualized and compared with different plant concepts.

SINAMICS in combination with energy-saving motors

Engineering integration stretches beyond the SINAMICS converter family to higher-level automation systems, and to a broad spectrum of energy-efficient motors with a wide range of performance classes, which, compared to previous motors, are able to demonstrate up to 10 % greater efficiency.

Variants

Depending on the application, the SINAMICS converter family offers the ideal variant for any drive task.

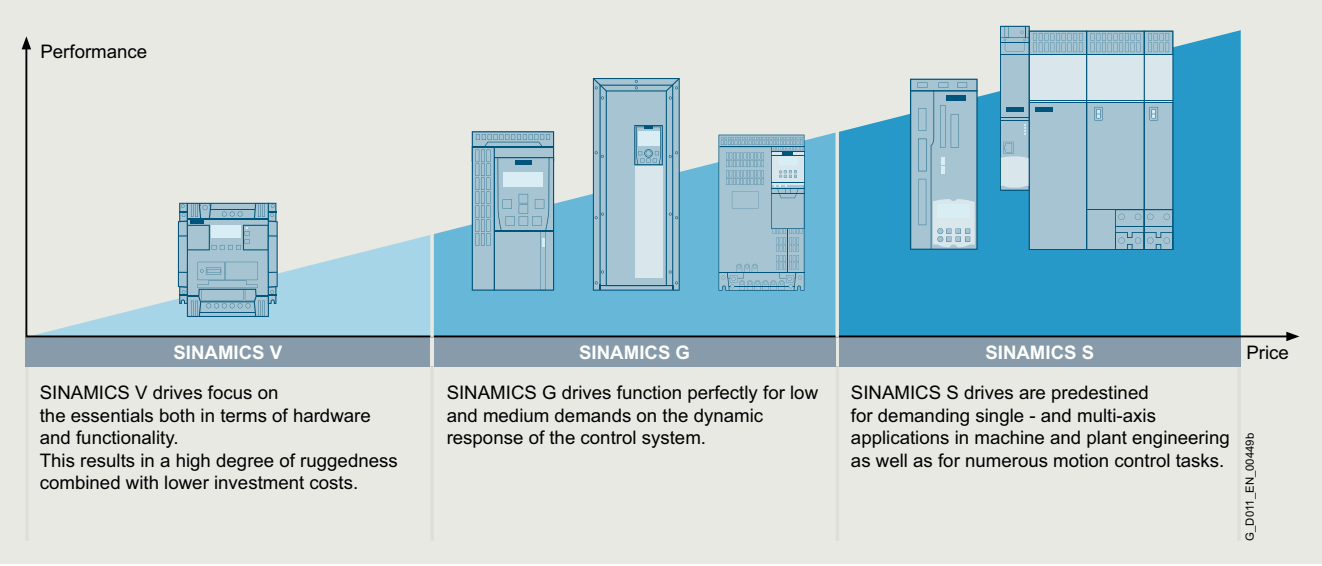

© Siemens 2022

Overview

Platform concept

All SINAMICS variants are based on a platform concept. Joint hardware and software components, as well as standardized tools for dimensioning, configuration, and commissioning tasks ensure high-level integration across all components. SINAMICS handles a wide variety of drive tasks with no system gaps. The different SINAMICS variants can be easily combined with each other.

Quality management according to EN ISO 9001

SINAMICS conforms to the most exacting quality requirements. Comprehensive quality assurance measures in all development and production processes ensure a consistently high level of quality.

Of course, our quality management system is certified by an independent authority in accordance with EN ISO 9001.

IDS – Integration at its very best

The Siemens Integrated Drive Systems (IDS) solution offers perfectly matched drive components with which you can meet your requirements. The drive components reveal their true strengths as an Integrated Drive System over the full range from engineering and commissioning through to operation: Integrated system configuration is performed using the Drive Technology Configurator: Just select a motor and a converter and design them with the SIZER for Siemens Drives engineering tool (integrated into TIA Selection Tool). The STARTER and SINAMICS Startdrive commissioning tools integrate the motor data and at the same time simplify efficient commissioning. Integrated Drive Systems are incorporated in the TIA Portal – this simplifies engineering, commissioning and diagnostics.

Low voltage										Direct voltage	Medium voltage
Standard performance frequency converters		Distributed frequency converters	Industry-specific frequency converters		Servo drives			High performance frequency converters		DC converters	Converters for applications with high outputs
SINAMICS V20 G120C G120	SINAMICS G130 G150	SINAMICS G115D G120D SIMATIC ET 200pro FC-2	SINAMICS G120X	SINAMICS G180	SINAMICS V90	SINAMICS S110	SINAMICS S210	SINAMICS S120 S120M	SINAMICS S150	SINAMICS DCM DCP [1]	SINAMICS GH150 GH180 GM150 SM150 GL150 SL150 SH150
0.12 kW to 250 kW	75 kW to 2700 kW	0.37 kW to 7.5 kW	0.75 kW to 630 kW	2.2 kW to 6600 kW	0.05 kW to 7 kW	0.55 kW to 132 kW	0.05 kW to 7 kW	0.55 kW to 5700 kW	75 kW to 1200 kW	6 kW to 30 MW	0.15 MW to 85 MW
Pumps, fans, compressors, conveyor belts, mixers, mills, spinning machines, textile machines, refrigerated display counters, fitness equipment, ventilation systems, single-axis positioning applications in machine and plant engineering	Pumps, fans, compressors, conveyor belts, mixers, mills, extruders	Conveyor technology, single-axis positioning applications (G120D)	Pumps, fans, compressors, building management systems, process industry, HVAC, water/waste water industries	Pumps, fans, compressors, conveyor belts, extruders, mixers, mills, kneaders, centrifuges, separators	Handling machines, packaging machines, automatic assembly machines, metal forming machines, printing machines, winding and unwinding units	Single-axis positioning applications in machine and plant engineering	Packaging machines, handling equipment, feed and withdrawal devices, stacking units, automatic assembly machines, laboratory automation, wood, glass and ceramics industry, digital printing machines	Production machines (packaging, textile and printing machines, paper machines, plastic processing machines), machine tools, plants, process lines and rolling mills, marine drives, test bays	Test bays, cross cutters, centrifuges	Rolling mill drives, wire-drawing machines, extruders and kneaders, cableways and lifts, test bay drives	Pumps, fans, compressors, mixers, extruders, mills, crushers, rolling mills, conveyor technology, excavators, test bays, marine drives, blast furnace fans, retrofit
Catalog D 31.1	Catalog D 11	Catalog D 31.2	Catalog D 31.5	Catalog D 18.1	Catalog D 33	Catalog D 31.1	Catalog D 32	Catalogs D 21.3, D 21.4 NC 62	Catalog D 21.3	Catalog D 23.1, Industry Mall	Internet [2]
Engineering tools (e.g. Drive Technology Configurator, SIZER for Siemens Drives, STARTER and SINAMICS Startdrive)											

G_D011_EN_00450r

[1] DC/DC controllers, see Industry Mall.

[2] www.siemens.com/medium-voltage-converter

© Siemens 2022

Overview

SINAMICS selection guide – typical applications

Use	Requirements for torque accuracy/speed accuracy/position accuracy/coordination of axes/functionality					
	Continuous motion			Non-continuous motion		
	Basic	Medium	High	Basic	Medium	High
	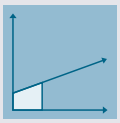	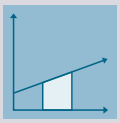	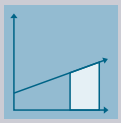	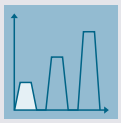		
Pumping, ventilating, compressing	Centrifugal pumps Radial / axial fans Compressors	Centrifugal pumps Radial / axial fans Compressors	Eccentric screw pumps	Hydraulic pumps Metering pumps	Hydraulic pumps Metering pumps	Descaling pumps Hydraulic pumps
	V20 G120C G120X	G120X G130/G150 G180 [1] DCM	S120	G120	S110	S120
Moving 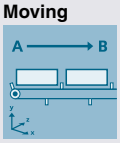	Conveyor belts Roller conveyors Chain conveyors	Conveyor belts Roller conveyors Chain conveyors Lifting/lowering devices Elevators Escalators/moving walkways Indoor cranes Marine drives Cable railways	Elevators Container cranes Mining hoists Excavators for open-cast mining Test bays	Acceleration conveyors Storage and retrieval machines	Acceleration conveyors Storage and retrieval machines Cross cutters Reel changers	Storage and retrieval machines Robotics Pick & place Rotary indexing tables Cross cutters Roll feeds Engagers/disengagers
	V20 G115D G120C ET 200pro FC-2 [2]	G120 G120D G130/G150 G180 [1]	S120 S150 DCM	V90 G120 G120D	S110 **S210** DCM	S120 **S210** DCM
Processing 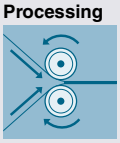	Mills Mixers Kneaders Crushers Agitators Centrifuges	Mills Mixers Kneaders Crushers Agitators Centrifuges Extruders Rotary furnaces	Extruders Winders/unwinders Lead/follower drives Calenders Main press drives Printing machines	Tubular bagging machines Single-axis motion control such as • Position profiles • Path profiles	Tubular bagging machines Single-axis motion control such as • Position profiles • Path profiles	Servo presses Rolling mill drives Multi-axis motion control such as • Multi-axis positioning • Cams • Interpolations
	V20 G120C	G120 G130/G150 G180 [1]	S120 S150 DCM	V90 G120	S110 **S210**	S120 **S210** DCM
Machining	Main drives for • Turning • Milling • Drilling	Main drives for • Drilling • Sawing	Main drives for • Turning • Milling • Drilling • Gear cutting • Grinding	Axis drives for • Turning • Milling • Drilling	Axis drives for • Drilling • Sawing	Axis drives for • Turning • Milling • Drilling • Lasering • Gear cutting • Grinding • Nibbling and punching
	S110	S110 S120	S120	S110	S110 S120	S120

Using the SINAMICS selection guide

The varying range of demands on modern variable frequency drives requires a large number of different types. Selecting the optimum drive has become a significantly more complex process. The application matrix shown simplifies this selection process considerably, by suggesting the ideal SINAMICS drive for examples of typical applications and requirements.

- The application type is selected from the vertical column
  - Pumping, ventilating, compressing
  - Moving
  - Processing
  - Machining
- The quality of the motion type is selected from the horizontal row
  - Basic
  - Medium
  - High

More Information

Further information about SINAMICS is available on the internet at
www.siemens.com/sinamics

Practical application examples and descriptions are available on the internet at
www.siemens.com/sinamics-applications

[1] Industry-specific converters.

[2] Information on the SIMATIC ET 200pro FC-2 frequency converter is available in Catalog D 31.2 and at: www.siemens.com/et200pro-fc

© Siemens 2022

Overview

Example: SINAMICS S210 converter frame size FSB, 200 V 1 AC, with SIMOTICS S-1FK2 servomotor shaft height 30

Example: SINAMICS S210 converter frame size FSB, 400 V 3 AC, with SIMOTICS S-1FK2 servomotor shaft height 63

The servo drive system comprises a SINAMICS S210 servo converter, a SIMOTICS S-1FK2, S-1FT2 or S-1FS2 servomotor and a matching One Cable Connection (OCC) for connecting the motor to the converter. SINAMICS S210 is a single-axis AC/AC servo converter system with high performance and dynamic response for mid-range Motion Control applications.

SINAMICS S210 servo converters are available for the following line voltages:

- 200 V to 240 V 1 AC (1 AC series)
- 200 V to 480 V 3 AC (3 AC series)

Flexible in application

The SINAMICS S210 is a flexible, versatile system. SIMOTICS S-1FK2, S-1FT2 or S-1FS2 series synchronous servomotors are installed in rotary and linear axes. The integrated One Cable Connection (OCC) interface allows user-friendly connection of a SIMOTICS S-1FK2, S-1FT2 or S-1FS2 motor with just one cable. The electronic motor type plate data can be read out, which eliminates the need to parameterize the converter with the motor data. This significantly simplifies and shortens commissioning.

In conjunction with the technological functions of the higher-level controller, there are many possibilities of motion – from continuous operation through positioning and synchronous operation, to coordinated motion of multiple axes via cyclic cams or interpolation – everything is possible.

The SINAMICS S210 converter has an integrated PROFINET communications interface for connecting to a control system.

The data exchange with the higher-level controllers takes place via standardized protocols – the PROFIdrive profile for positioning mode and the PROFIsafe profile for safety-related communication.

Thus, operation is optimally ensured with the SIMATIC S7 automation system. The drive axis is connected via technology objects and Motion Control blocks in the SIMATIC S7 or a SIMOTION controller.

High performance for fast and precise control

The high performance of the SINAMICS S210 servo drive system in conjunction with a SIMOTICS S-1FK2, S-1FT2 or S-1FS2 servomotor derives from the following features:

- Low moment of inertia and high overload capability of the motor
- High-resolution encoder with fast scanning
- Current controller clock cycle of 62.5 µs and a pulse frequency of 8 kHz of the servo converter

This enables short cycle times on the machine even with complex motion control.

DC link coupling (only 3 AC series)

For devices of the 3 AC series, the DC links of up to six converters can be coupled. Thus, energy balancing between the axes is possible and energy produced during braking can be used by other axes for accelerating. This is not only efficient but also reduces the dissipated heat in the control cabinet, because the energy that is produced no longer has to be converted to heat in the braking resistor.

© Siemens 2022

Overview

The SIMOTICS S-1FK2, S-1FT2 and S-1FS2 servomotors differ as follows:

	SIMOTICS S servomotors for SINAMICS S210		
	1FK2	**1FT2**	**1FS2**
	High Dynamic (HD) / Compact (CT)	High Dynamic (HD) / Compact (CT)	High Dynamic (HD) / Compact (CT)
Shaft heights			
• SH20	HD (1FK2102)	HD (1FT2102)	–
• SH30	HD (1FK2103) / CT (1FK2203)	HD (1FT2103) / CT (1FT2203)	–
• SH40	HD (1FK2104) / CT (1FK2204)	HD (1FT2104) / CT (1FT2204)	HD (1FS2104)
• SH48	CT (1FK2205)	CT (1FT2205)	–
• SH52	HD (1FK2105)	HD (1FT2105)	HD (1FS2105)
• SH63	HD (1FK2106) / CT (1FK2206)	HD (1FT2106) / CT (1FT2206)	HD (1FS2106)
• SH80	CT (1FK2208)	CT (1FT2208)	CT (1FS2208)
• SH100	CT (1FK2210)	CT (1FT2210)	–
Static torque M_0	0.16 ... 40 Nm (0.12 ... 29.50 lb_f-ft)	0.16 ... 40 Nm (0.12 ... 29.50 lb_f-ft)	3.1 ... 23.5 Nm (2.29 ... 17.30 lb_f-ft)
Rated power P_N	Up to 6.4 kW	Up to 6.4 kW	Up to 2.51 kW
Applications	• Packaging machines • Handling equipment • Feed and withdrawal devices • Stacking units • Automatic assembly machines • Laboratory automation • Woodworking, glass and ceramic industries • Digital printing machines	• Packaging machines • Handling equipment • Feed and withdrawal devices • Stacking units • Automatic assembly machines • Laboratory automation • Woodworking, glass and ceramic industries • Digital printing machines	• Food and beverage industries • Pharmaceutical industry • Packaging machines • Handling equipment • Feed and withdrawal devices
Housing/paint finish	Aluminum/anthracite gray	Aluminum/anthracite gray Optionally other colors possible	Stainless steel
Degree of protection	IP64 IP65 optional or retrofittable	IP64 IP65 optional or retrofittable, IP67 optional	IP66/IP67, IP69K (30 bars)
Encoder systems			
• Absolute encoder 22-bit singleturn	✓	✓	–
• Absolute encoder 22-bit + 12-bit multiturn	✓	✓	✓
• Absolute encoder 26-bit singleturn	–	✓	–
• Absolute encoder 26-bit + 12-bit multiturn	–	✓	–
Notes	• Also available as servo planetary geared motor	• Versions with increased rated and maximum speed • Options: - Increased detergent resistance - Pressure balance - Metal rating plate - Coating color • Also available as servo planetary geared motor	• Very high detergent resistance • Certification according to EHEDG • With connection cable (cable end and cable length up to 11 m can be selected)

Optimized connection technology with One Cable Connection (OCC)

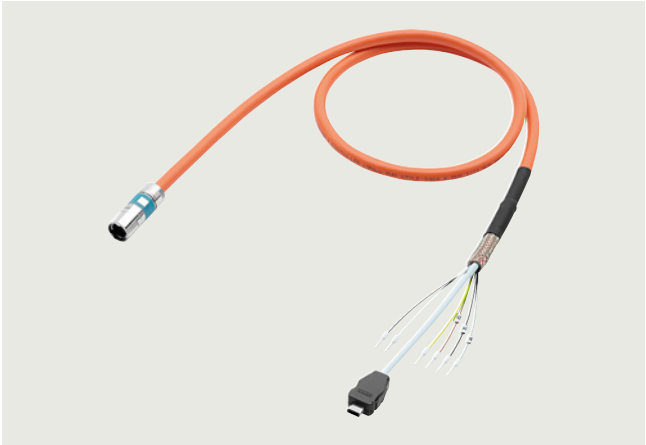

Example: SINAMICS S210 M12 OCC connecting cable

Motor and converter are simply connected to one another by one instead of the usual two or three cables. With this One Cable Technology, energy supply, encoder signals and braking signal are brought together in a single cable. This results in the following advantages:

- Time-saving by laying only one cable
- Smaller installation space and space requirement in cable collars, tight bending radii
- Only one cable has to be cleaned. This is advantageous, e.g. in the pharmaceutical industry and where higher requirements are placed upon hygiene
- Can be ordered to the decimeter
- Compact connection system
- Rotatable connector on the motor side
- Motor with very low interfering contour for restricted installation space.

Cables are available in two different qualities:

- MOTION-CONNECT 500
- MOTION-CONNECT 800PLUS
- MOTION-CONNECT 400 (only for SIMOTICS S-1FS2)

In addition to the pre-assembled cable, individual components (connectors and products sold by the meter) can be ordered for self-assembly.

© Siemens 2022

Overview

Easy commissioning via web server, One Button Tuning and SINAMICS Startdrive/TIA Portal (V15.1 or higher)

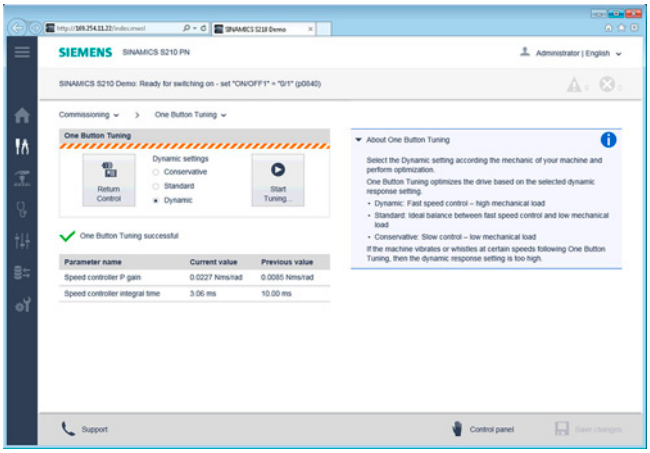

One Button Tuning

The web server of the converter offers a simple means of parameter assignment. The web server allows commissioning purely oriented on the functionality of the drive. With the web server, the SINAMICS S210 servo drive system can be brought into operation with a few clicks.

As a result of reading the electronic type plate of the connected SIMOTICS S-1FK2, S-1FT2 or S-1FS2 servomotor, only a few operator actions, such as automatic controller optimization with One Button Tuning, are necessary, as the motor and encoder are automatically detected. The controller parameters are automatically optimized. The three selectable dynamic levels of the controller can optimally take into account the desired behavior of the connected mechanics.

A motion of the axis can take place directly via the control panel during commissioning.

The customer benefits from the web server in many ways:

- Commissioning can also be easily done in places difficult to access, as the web server in the converter can also be accessed directly via PROFINET from the controller.
- The web server provides full diagnostic capability without the need for additional software.
- Commissioning and diagnostics can also be done without a cable via mobile devices, such as laptops, smart phones and tablets (an additional WLAN access point is necessary).
- Intuitive user interface

In addition to easy commissioning directly via the web server of the converter, engineering is also possible with SINAMICS Startdrive and TIA Portal (V15.1 or higher). The tool for configuration, commissioning and diagnostics has been optimized with regard to the consistent utilization of the TIA Portal advantages – one shared work environment for PLC, HMI and drives. SINAMICS firmware V5.2 or higher is required for SINAMICS S210 devices.

For more information, see the Engineering tools selection.

Diagnostics

Faults and warnings are shown on the display located under the front cover, and they can be acknowledged with the Acknowledge button. Extensive diagnostics with plain text messages for cause and remedy information is possible via the web server.

Safety Integrated

The integrated safety functions provide highly effective, application-oriented protection for personnel and machinery (terms as defined in IEC 61800-5-2).

The following Safety Integrated Basic Functions are included as standard:

- Safe Torque Off (STO)
- Safe Brake Control (SBC)
- Safe Stop 1 time controlled (SS1-t)

The following Safety Integrated Extended Functions [1] are available as options:

- Safe Stop 1 (SS1)
- Safe Stop 2 (SS2)
- Safe Operating Stop (SOS)
- Safely-Limited Speed (SLS)
- Safe Speed Monitor (SSM)
- Safe Direction (SDI)
- Safely-Limited Acceleration (SLA)
- Safe Brake Test (SBT) diagnostic function

The Safety Integrated Functions are fully integrated into the drive system. They can be activated via fail-safe digital inputs on the converter (only STO and SS1-t) or via PROFINET with PROFIsafe.

The Safety Integrated Functions are implemented electronically and therefore require no additional installation effort or space in the control cabinet. Furthermore, the costs are considerably lower than for externally implemented monitoring functions.

The Safety Integrated Functions can be easily commissioned using the web server of the converter or SINAMICS Startdrive/TIA Portal V15.1 or higher.

Perfect combination with SIMATIC S7-1500, SIMATIC S7-1500 T-CPU, SIMATIC ET 200SP Open Controller, and PROFINET

It communicates with the higher-level control via PROFINET IRT. For optimal interaction between the controller and the SINAMICS S210 servo drive system, SIMATIC S7-1500, SIMATIC S7-1500 T-CPU, SIMATIC ET 200SP Open Controller, and SIMOTION can be used as the control system.

The SINAMICS S210 servo converter has an integrated PROFINET communications interface with a cycle of up to 250 µs for connecting to a control system.

Standardized protocols for linking to a higher-level control with RT and IRT are supported – the PROFIdrive profile with DSC for positioning mode and the PROFIsafe profile for safety-related communication. Functions, such as Shared Device, ring redundancy and PROFIenergy, are also possible.

[1] Available in SINAMICS V5.1 SP1 and higher. The Extended Functions require a Safety license.

© Siemens 2022

SINAMICS S210 servo drive system

Overview

Everything from one source: Through the use of Motion Control functionalities in the controller, the combination of converter and SIMATIC S7 automation system or a SIMOTION controller allows ideally harmonized engineering. As a result, commissioning times are shortened.

Via technology objects and Motion Control blocks of the higher-level controller, there are many possibilities of motion, such as continuous operation, positioning and synchronous operation, and coordinated motion of multiple axes via cyclic cams or interpolation.

Siemens offers tested SIMATIC PLC/HMI application examples for connection of the servo drive system to a SIMATIC controller:
www.siemens.com/sinamics-applications

Further information on the SIMATIC S7-1500, SIMATIC S7-1500 T-CPU and SIMATIC ET 200SP Open Controller is available in the ST 70 Catalog and on the internet under
www.siemens.com/simatic-s7-1500

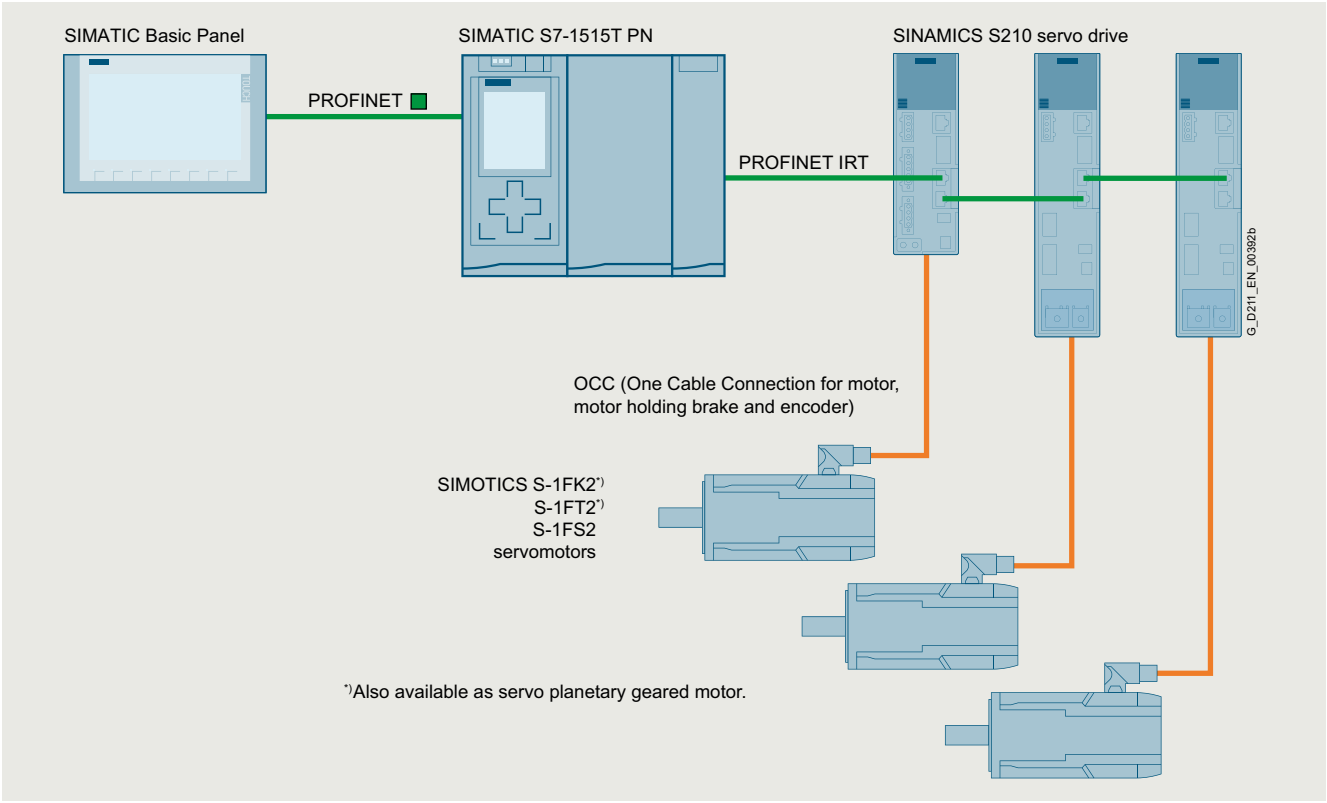

Example: Communication via PROFINET

Ruggedness

The SINAMICS S210 is equipped as standard with varnished or partially varnished modules. The painting on the modules protects the sensitive SMD components against corrosive gases, chemically active dust and moisture.

Can be used worldwide

In addition to the usual approvals, the SINAMICS S210 drive system also has UL approval for the North American market. This means that the drive system, comprising SINAMICS S210 and SIMOTICS S-1FK2, S-1FT2 or S-1FS2, including the One Cable Connection (OCC), can be used worldwide.

More information

A **Quick Installation Guide** is supplied in hard copy form in English with every SINAMICS S210. Further documentation, such as the operating instructions, is available free on the internet at:
www.siemens.com/sinamics-s210/documentation

Detailed information on the SINAMICS S210 drive system, including the latest technical documentation (brochures, tutorials, dimensional drawings, certificates, manuals and operating instructions), is available on the internet at:
www.siemens.com/sinamics-s210

and is also available via the Drive Technology Configurator (DT Configurator) on the internet.
The DT Configurator can be found in the Siemens Industry Mall at the following address:
www.siemens.com/sinamics-s210/configuration

© Siemens 2022

Overview

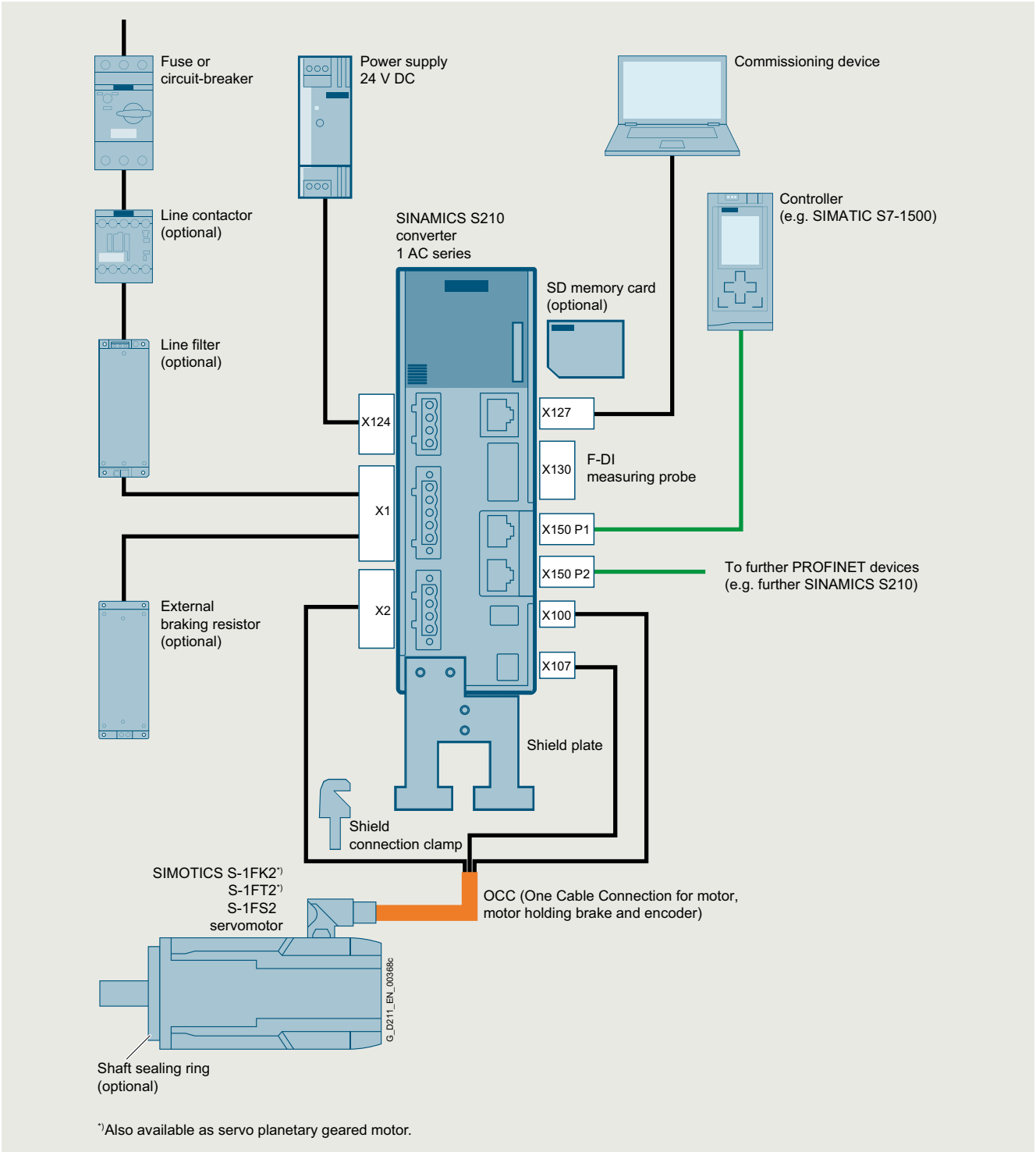

Example for the 1 AC series

© Siemens 2022

Overview

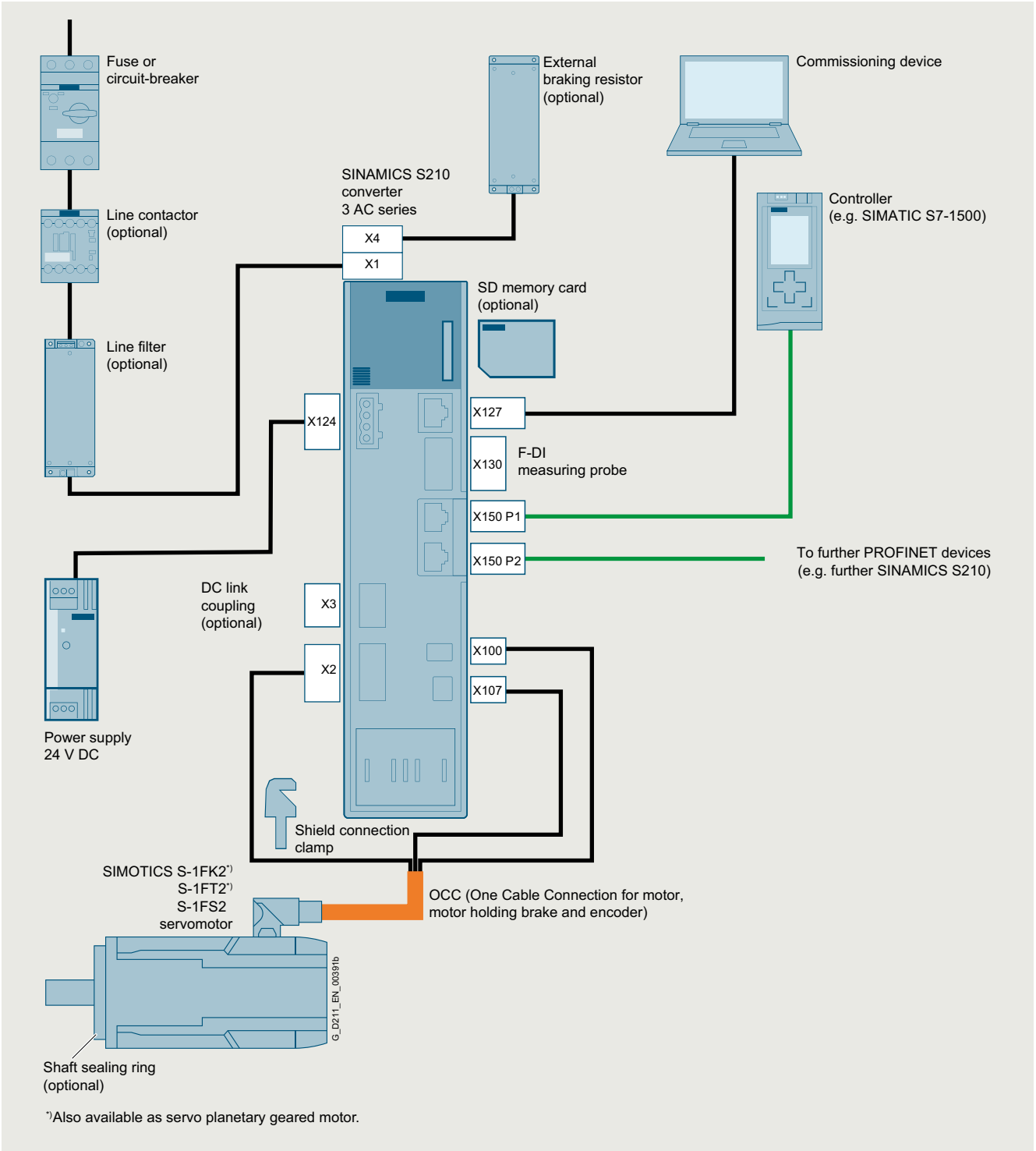

Example for the 3 AC series

© Siemens 2022

Order overview

SINAMICS S210 drive system with SIMOTICS S-1FK2 servomotors for line connection 200 ... 240 V 1 AC

SIMOTICS S-1FK2 servomotor							SINAMICS S210 servo converter (1 AC series) Supply voltage 200 ... 240 V 1 AC			MOTION-CONNECT motor connection cable
Static torque M_0 Nm (lb$_f$-ft)	Maximum torque M_{max} Nm (lb$_f$-ft)	Maximum speed n_{max} rpm	Rated power 230 V P_N kW (hp)	Rated torque M_N Nm (lb$_f$-ft)	Rotor moment of inertia J_{Mot} kg cm^2 (lb$_f$-in^2)	Article No.	Rated power 230 V P_N kW	Frame size	Article No.	Article No.
High Dynamic for highly dynamic applications							**SINAMICS S210 servo converter**			**One Cable Connection**
Shaft height 20 – rated speed n_N 3000 rpm										
0.16 (0.12)	0.56 (0.41)	8000	0.05 (0.07)	0.16 (0.12)	0.025 (0.009)	**1FK2102-0AG■■-■■A0**	0.1	FSA	**6SL3210-5HB10-1UF0**	**6FX■002-8QN04-1■■■**
0.32 (0.24)	1.11 (0.82)	8000	0.1 (0.13)	0.32 (0.24)	0.036 (0.012)	**1FK2102-1AG■■-■■A0**	0.1	FSA	**6SL3210-5HB10-1UF0**	**6FX■002-8QN04-1■■■**
Shaft height 30 – rated speed n_N 3000 rpm										
0.64 (0.47)	1.95 (1.44)	8000	0.2 (0.27)	0.64 (0.47)	0.093 (0.032)	**1FK2103-2AG■■-■■A0**	0.2	FSA	**6SL3210-5HB10-2UF0**	**6FX■002-8QN04-1■■■**
1.27 (0.94)	4.05 (2.99)	7300	0.4 (0.54)	1.27 (0.94)	0.14 (0.048)	**1FK2103-4AG■■-■■A0**	0.4	FSB	**6SL3210-5HB10-4UF0**	**6FX■002-8QN04-1■■■**
Shaft height 40 – rated speed n_N 1500 rpm										
1.27 (0.94)	3.75 (2.77)	3600	0.2 (0.27)	1.27 (0.94)	0.35 (0.120)	**1FK2104-4AF■■-■■A0**	0.2	FSA	**6SL3210-5HB10-2UF0**	**6FX■002-8QN08-1■■■**
2.4 (1.77)	7.5 (5.53)	3300	0.375 (0.50)	2.4 (1.77)	0.56 (0.191)	**1FK2104-5AF■■-■■A0**	0.4	FSB	**6SL3210-5HB10-4UF0**	**6FX■002-8QN08-1■■■**
3.2 (2.36)	10 (7.38)	3600	0.5 (0.67)	3.2 (2.36)	0.76 (0.260)	**1FK2104-6AF■■-■■A0**	0.75	FSC	**6SL3210-5HB10-8UF0**	**6FX■002-8QN08-1■■■**
Shaft height 40 – rated speed n_N 3000 rpm										
1.27 (0.94)	3.85 (2.84)	7500	0.4 (0.54)	1.27 (0.94)	0.35 (0.120)	**1FK2104-4AK■■-■■A0**	0.4	FSB	**6SL3210-5HB10-4UF0**	**6FX■002-8QN08-1■■■**
2.4 (1.77)	7.6 (5.61)	7100	0.75 (1.01)	2.4 (1.77)	0.56 (0.191)	**1FK2104-5AK■■-■■A0**	0.75	FSC	**6SL3210-5HB10-8UF0**	**6FX■002-8QN08-1■■■**
Compact for high precision applications							**SINAMICS S210 servo converter**			**One Cable Connection**
Shaft height 30 – rated speed n_N 3000 rpm										
0.64 (0.47)	1.85 (1.36)	8000	0.2 (0.27)	0.64 (0.47)	0.20 (0.068)	**1FK2203-2AG■■-■■A0**	0.2	FSA	**6SL3210-5HB10-2UF0**	**6FX■002-8QN04-1■■■**
1.27 (0.94)	3.75 (2.77)	7800	0.4 (0.54)	1.27 (0.94)	0.35 (0.120)	**1FK2203-4AG■■-■■A0**	0.4	FSB	**6SL3210-5HB10-4UF0**	**6FX■002-8QN04-1■■■**
Shaft height 40 – rated speed n_N 1500 rpm										
2.4 (1.77)	7.1 (5.24)	3700	0.375 (0.50)	2.4 (1.77)	1.2 (0.410)	**1FK2204-5AF■■-■■A0**	0.4	FSB	**6SL3210-5HB10-4UF0**	**6FX■002-8QN08-1■■■**
3.2 (2.36)	9.5 (7.01)	3800	0.5 (0.67)	3.2 (2.36)	1.6 (0.547)	**1FK2204-6AF■■-■■A0**	0.75	FSC	**6SL3210-5HB10-8UF0**	**6FX■002-8QN08-1■■■**
Shaft height 40 – rated speed n_N 3000 rpm										
2.4 (1.77)	7.1 (5.24)	7500	0.75 (1.01)	2.4 (1.77)	1.2 (0.410)	**1FK2204-5AK■■-■■A0**	0.75	FSC	**6SL3210-5HB10-8UF0**	**6FX■002-8QN08-1■■■**
Shaft height 48 – rated speed n_N 1500 rpm										
3.6 (2.66)	10.8 (7.97)	3200	0.53 (0.71)	3.4 (2.51)	3.2 (1.093)	**1FK2205-2AF■■-■■A0**	0.75	FSC	**6SL3210-5HB10-8UF0**	**6FX■002-8QN08-1■■■**

Article No. supplements

Holding brake	
Without brake	**0**
With brake	**1**

Degree of protection	
IP64 (without shaft sealing ring)	**0**
IP65 (with shaft sealing ring)	**1**

Shaft extension / feather key	
Plain shaft	**0**
Shaft with feather key	**1**
Plain shaft, reduced shaft diameter • ∅11 × 23 mm (0.43 × 0.91 in) (only for 1FK2.03 and IP64) • ∅14 × 30 mm (0.55 × 1.18 in) (only for 1FK2.04 and IP64)	**0 2**

Encoder	
AS22DQC (absolute encoder 22-bit singleturn)	**S**
AM22DQC (absolute encoder 22-bit + 12-bit multiturn)	**M**

Pre-assembled MOTION-CONNECT cable	
MOTION-CONNECT 500	**5**
MOTION-CONNECT 800PLUS	**8**

Length code (max. 50 m (164 ft))	
0 m (0 ft)	**A**
10 m (32.8 ft)	**B**
...	...
50 m (164 ft)	**F**

0 m (0 ft)	**A**
1 m (3.28 ft)	**B**
2 m (6.56 ft)	**C**
3 m (9.84 ft)	**D**
4 m (13.1 ft)	**E**
5 m (16.4 ft)	**F**
6 m (19.7 ft)	**G**
7 m (23.0 ft)	**H**
8 m (26.2 ft)	**J**
9 m (29.5 ft)	**K**

0 m (0 ft)	**0**
0.1 m (0.33 ft)	**1**
...	...
0.8 m (2.62 ft)	**8**

© Siemens 2022

Clicking to the Industry Mall

6SL3255-0AA00-5AA0

SINAMICS S210 servo drive system with SIMOTICS S-1FK2 servomotors

Order overview

SINAMICS S210 drive system with SIMOTICS S-1FK2 servomotors for line connection 200 ... 240 V 3 AC

SIMOTICS S-1FK2 servomotor							SINAMICS S210 servo converter (3 AC series) Supply voltage 200 ... 240 V 3 AC			MOTION-CONNECT motor connection cable
Static torque M_0 Nm (lb$_f$-ft)	Maximum torque M_{max} Nm (lb$_f$-ft)	Maximum speed n_{max} rpm	Rated power 240 V P_N kW (hp)	Rated torque M_N Nm (lb$_f$-ft)	Rotor moment of inertia J_{Mot} kg cm^2 (lb$_f$-in^2)	Article No.	Rated power 240 V P_N kW	Frame size	Article No.	Article No.
High Dynamic for highly dynamic applications							**SINAMICS S210 servo converter**			**One Cable Connection**
Shaft height 20 – rated speed n_N 3000 rpm										
0.16 (0.12)	0.56 (0.41)	8000	0.05 (0.07)	0.16 (0.12)	0.025 (0.009)	**1FK2102-0AG■■-■■A0**	0.24	FSA	**6SL3210-5HE10-4UF0**	**6FX■002-8QN04-1■■■**
0.32 (0.24)	1.11 (0.82)	8000	0.1 (0.13)	0.32 (0.24)	0.036 (0.012)	**1FK2102-1AG■■-■■A0**	0.24	FSA	**6SL3210-5HE10-4UF0**	**6FX■002-8QN04-1■■■**
Shaft height 30 – rated speed n_N 3000 rpm										
0.64 (0.47)	1.95 (1.44)	8000	0.2 (0.27)	0.64 (0.47)	0.093 (0.032)	**1FK2103-2AG■■-■■A0**	0.45	FSA	**6SL3210-5HE10-8UF0**	**6FX■002-8QN04-1■■■**
1.27 (0.94)	4.05 (2.99)	8000	0.4 (0.54)	1.27 (0.94)	0.14 (0.048)	**1FK2103-4AG■■-■■A0**	0.6	FSA	**6SL3210-5HE11-0UF0**	**6FX■002-8QN04-1■■■**
Shaft height 40 – rated speed n_N 1500 rpm										
1.27 (0.94)	3.75 (2.77)	7200	0.2 (0.27)	1.27 (0.94)	0.35 (0.120)	**1FK2104-4AF■■-■■A0**	0.24	FSA	**6SL3210-5HE10-4UF0**	**6FX■002-8QN08-1■■■**
2.4 (1.77)	7.5 (5.53)	6700	0.375 (0.50)	2.4 (1.77)	0.56 (0.191)	**1FK2104-5AF■■-■■A0**	0.45	FSA	**6SL3210-5HE10-8UF0**	**6FX■002-8QN08-1■■■**
3.2 (2.36)	10 (7.38)	7200	0.5 (0.67)	3.2 (2.36)	0.76 (0.260)	**1FK2104-6AF■■-■■A0**	0.6	FSA	**6SL3210-5HE11-0UF0**	**6FX■002-8QN08-1■■■**
Shaft height 40 – rated speed n_N 3000 rpm										
1.27 (0.94)	3.85 (2.84)	8000	0.4 (0.54)	1.27 (0.94)	0.35 (0.120)	**1FK2104-4AK■■-■■A0**	0.6	FSA	**6SL3210-5HE11-0UF0**	**6FX■002-8QN08-1■■■**
2.4 (1.77)	7.6 (5.61)	8000	0.75 (1.01)	2.4 (1.77)	0.56 (0.191)	**1FK2104-5AK■■-■■A0**	0.9	FSB	**6SL3210-5HE11-5UF0**	**6FX■002-8QN08-1■■■**
Shaft height 52 – rated speed n_N 1500 rpm										
5 (3.69)	15 (11.06)	6000	0.79 (1.06)	5 (3.69)	1.7 (0.581)	**1FK2105-4AF■■-■■A0**	0.9	FSB	**6SL3210-5HE11-5UF0**	**6FX■002-8QN08-1■■■**
8 (5.90)	24 (17.70)	6000	1.26 (1.69)	8 (5.90)	2.7 (0.923)	**1FK2105-6AF■■-■■A0**	1.2	FSB	**6SL3210-5HE12-0UF0**	**6FX■002-8QN08-1■■■**
Shaft height 63 – rated speed n_N 1500 rpm										
9 (6.64)	26 (19.18)	6000	1.3 (1.74)	8.3 (6.12)	4.6 (1.572)	**1FK2106-3AF■■-■■A0**	3	FSC	**6SL3210-5HE15-0UF0**	**6FX■002-8QN11-1■■■**
12 (8.85)	33 (24.34)	6000	1.64 (2.20)	10.5 (7.74)	6.0 (2.050)	**1FK2106-4AF■■-■■A0**	3	FSC	**6SL3210-5HE15-0UF0**	**6FX■002-8QN11-1■■■**
16 (11.80)	45.5 (33.56)	6000	2.15 (2.88)	13.8 (10.18)	8.7 (2.973)	**1FK2106-6AF■■-■■A0**	4.2	FSC	**6SL3210-5HE17-0UF0**	**6FX■002-8QN11-1■■■**

Article No. supplements

Holding brake	
Without brake	**0**
With brake	**1**
Degree of protection	
IP64 (without shaft sealing ring)	**0**
IP65 (with shaft sealing ring)	**1**
Shaft extension / feather key	
Plain shaft	**0**
Shaft with feather key	**1**
Plain shaft, reduced shaft diameter • ∅11 × 23 mm (0.43 × 0.91 in) (only for 1FK2.03 and IP64) • ∅14 × 30 mm (0.55 × 1.18 in) (only for 1FK2.04 and IP64)	**2**
Encoder	
AS22DQC (absolute encoder 22-bit singleturn)	**S**
AM22DQC (absolute encoder 22-bit + 12-bit multiturn)	**M**

Pre-assembled MOTION-CONNECT cable	
MOTION-CONNECT 500	**5**
MOTION-CONNECT 800PLUS	**8**
Length code (max. 50 m (164 ft))	
0 m (0 ft)	**A**
10 m (32.8 ft)	**B**
...	...
50 m (164 ft)	**F**
0 m (0 ft)	**A**
1 m (3.28 ft)	**B**
2 m (6.56 ft)	**C**
3 m (9.84 ft)	**D**
4 m (13.1 ft)	**E**
5 m (16.4 ft)	**F**
6 m (19.7 ft)	**G**
7 m (23.0 ft)	**H**
8 m (26.2 ft)	**J**
9 m (29.5 ft)	**K**
0 m (0 ft)	**0**
0.1 m (0.33 ft)	**1**
...	...
0.8 m (2.62 ft)	**8**

When operating a SINAMICS S210 servo converter with a supply voltage of 200 V to 240 V 3 AC, an external, intrinsically safe braking resistor is always required.

© Siemens 2022

Order overview

SINAMICS S210 drive system with SIMOTICS S-1FK2 servomotors for line connection 200 ... 240 V 3 AC (continued)

SIMOTICS S-1FK2 servomotor							SINAMICS S210 servo converter (3 AC series) Supply voltage 200 ... 240 V 3 AC			MOTION-CONNECT motor connection cable
Static torque M_0 Nm (lb$_f$-ft)	Maximum torque M_{max} Nm (lb$_f$-ft)	Maximum speed n_{max} rpm	Rated power 240 V P_N kW (hp)	Rated torque M_N Nm (lb$_f$-ft)	Rotor moment of inertia J_{Mot} kg cm^2 (lb$_f$-in^2)	Article No.	Rated power 240 V P_N kW	Frame size	Article No.	Article No.
Compact for high precision applications							**SINAMICS S210 servo converter**			**One Cable Connection**
Shaft height 30 – rated speed n_N 3000 rpm										
0.64 (0.47)	1.85 (1.36)	8000	0.2 (0.27)	0.64 (0.47)	0.20 (0.068)	**1FK2203-2AG■■-■■A0**	0.45	FSA	**6SL3210-5HE10-8UF0**	**6FX■002-8QN04-1■■■**
1.27 (0.94)	3.75 (2.77)	8000	0.4 (0.54)	1.27 (0.94)	0.35 (0.120)	**1FK2203-4AG■■-■■A0**	0.6	FSA	**6SL3210-5HE11-0UF0**	**6FX■002-8QN04-1■■■**
Shaft height 40 – rated speed n_N 1500 rpm										
2.4 (1.77)	7.1 (5.24)	7500	0.375 (0.50)	2.4 (1.77)	1.2 (0.410)	**1FK2204-5AF■■-■■A0**	0.45	FSA	**6SL3210-5HE10-8UF0**	**6FX■002-8QN08-1■■■**
3.2 (2.36)	9.5 (7.01)	7600	0.5 (0.67)	3.2 (2.36)	1.6 (0.547)	**1FK2204-6AF■■-■■A0**	0.6	FSA	**6SL3210-5HE11-0UF0**	**6FX■002-8QN08-1■■■**
Shaft height 40 – rated speed n_N 3000 rpm										
2.4 (1.77)	7.1 (5.24)	8000	0.75 (1.01)	2.4 (1.77)	1.2 (0.410)	**1FK2204-5AK■■-■■A0**	0.9	FSB	**6SL3210-5HE11-5UF0**	**6FX■002-8QN08-1■■■**
Shaft height 48 – rated speed n_N 1500 rpm										
3.6 (2.66)	10.8 (7.97)	6000	0.53 (0.71)	3.4 (2.51)	3.2 (1.093)	**1FK2205-2AF■■-■■A0**	0.6	FSA	**6SL3210-5HE11-0UF0**	**6FX■002-8QN08-1■■■**
6 (4.43)	18 (13.28)	6000	0.86 (1.15)	5.5 (4.06)	5.1 (1.743)	**1FK2205-4AF■■-■■A0**	0.9	FSB	**6SL3210-5HE11-5UF0**	**6FX■002-8QN08-1■■■**
Shaft height 63 – rated speed n_N 1500 rpm										
6.5 (4.79)	18 (13.28)	6000	0.97 (1.30)	6.1 (4.50)	7.8 (2.665)	**1FK2206-2AF■■-■■A0**	0.9	FSB	**6SL3210-5HE11-5UF0**	**6FX■002-8QN11-1■■■**
12 (8.85)	36 (26.55)	5800	1.72 (2.31)	10.9 (8.04)	15 (5.126)	**1FK2206-4AF■■-■■A0**	2.1	FSC	**6SL3210-5HE13-5UF0**	**6FX■002-8QN11-1■■■**
Shaft height 80 – rated speed n_N 1000 rpm										
18 (13.28)	51 (37.62)	4100	1.74 (2.33)	16.6 (12.24)	30 (10.251)	**1FK2208-3AC■■-■■A0**	2.1	FSC	**6SL3210-5HE13-5UF0**	**6FX■002-8QN11-1■■■**
22 (16.23)	66 (48.68)	4600	2.15 (2.88)	20 (14.75)	39 (13.326)	**1FK2208-4AC■■-■■A0**	3	FSC	**6SL3210-5HE15-0UF0**	**6FX■002-8QN11-1■■■**
27 (19.92)	80 (59.01)	4700	2.5 (3.35)	23.5 (17.33)	48 (16.402)	**1FK2208-5AC■■-■■A0**	4.2	FSC	**6SL3210-5HE17-0UF0**	**6FX■002-8QN11-1■■■**
Shaft height 100 – rated speed n_N 750 rpm										
30 (22.13)	90 (66.38)	2500	2.5 (3.35)	30 (22.13)	89 (30.411)	**1FK2210-3AB■■-■■A0**	2.1	FSC	**6SL3210-5HE13-5UF0**	**6FX■002-8QN11-1■■■**
40 (29.50)	120 (88.51)	2500	3.05 (4.09)	39 (28.77)	120 (41.004)	**1FK2210-4AB■■-■■A0**	3	FSC	**6SL3210-5HE15-0UF0**	**6FX■002-8QN11-1■■■**
Shaft height 100 – rated speed n_N 1000 rpm										
30 (22.13)	90 (66.38)	4400	3.2 (4.29)	30 (22.13)	89 (30.411)	**1FK2210-3AC■■-■■A0**	4.2	FSC	**6SL3210-5HE17-0UF0**	**6FX■002-8QN11-1■■■**
40 (29.50)	120 (88.51)	3300	3.9 (5.23)	37 (27.29)	120 (41.004)	**1FK2210-4AC■■-■■A0**	4.2	FSC	**6SL3210-5HE17-0UF0**	**6FX■002-8QN11-1■■■**

Article No. supplements

Holding brake				
Without brake	**0**			
With brake	**1**			
Degree of protection				
IP64 (without shaft sealing ring)		**0**		
IP65 (with shaft sealing ring)		**1**		
Shaft extension / feather key				
Plain shaft			**0**	
Shaft with feather key			**1**	
Plain shaft, reduced shaft diameter		**0**	**2**	
• Ø11 × 23 mm (0.43 × 0.91 in) (only for 1FK2.03 and IP64)				
• Ø14 × 30 mm (0.55 × 1.18 in) (only for 1FK2.04 and IP64)				
Encoder				
AS22DQC (absolute encoder 22-bit singleturn)				**S**
AM22DQC (absolute encoder 22-bit + 12-bit multiturn)				**M**

Pre-assembled MOTION-CONNECT cable			
MOTION-CONNECT 500	**5**		
MOTION-CONNECT 800PLUS	**8**		
Length code (max. 50 m (164 ft))			
0 m (0 ft)			**A**
10 m (32.8 ft)			**B**
...			...
50 m (164 ft)			**F**
0 m (0 ft)			**A**
1 m (3.28 ft)			**B**
2 m (6.56 ft)			**C**
3 m (9.84 ft)			**D**
4 m (13.1 ft)			**E**
5 m (16.4 ft)			**F**
6 m (19.7 ft)			**G**
7 m (23.0 ft)			**H**
8 m (26.2 ft)			**J**
9 m (29.5 ft)			**K**
0 m (0 ft)			**0**
0.1 m (0.33 ft)			**1**
...			...
0.8 m (2.62 ft)			**8**

When operating a SINAMICS S210 servo converter with a supply voltage of 200 V to 240 V 3 AC, an external, intrinsically safe braking resistor is always required.

© Siemens 2022

Order overview

SINAMICS S210 drive system with SIMOTICS S-1FK2 servomotors for line connection 380 ... 480 V 3 AC

SIMOTICS S-1FK2 servomotor							SINAMICS S210 servo converter (3 AC series) Supply voltage 380 ... 480 V 3 AC			MOTION-CONNECT motor connection cable
Static torque M_0 Nm (lb$_f$-ft)	Maximum torque M_{max} Nm (lb$_f$-ft)	Maximum speed n_{max} rpm	Rated power 400 V P_N kW (hp)	Rated torque M_N Nm (lb$_f$-ft)	Rotor moment of inertia J_{Mot} kg cm^2 (lb$_f$-in^2)	Article No.	Rated power 400 V P_N kW	Frame size	Article No.	Article No.
High Dynamic for highly dynamic applications							**SINAMICS S210 servo converter**			**One Cable Connection**
Shaft height 30 – rated speed n_N 4500 rpm										
0.64 (0.47)	1.95 (1.44)	8000	0.28 (0.38)	0.59 (0.44)	0.093 (0.032)	**1FK2103-2AH■■-■■A0**	0.4	FSA	**6SL3210-5HE10-4UF0**	**6FX■002-8QN08-1■■■**
1.27 (0.94)	4.05 (2.99)	8000	0.48 (0.64)	1.01 (0.74)	0.14 (0.048)	**1FK2103-4AH■■-■■A0**	0.75	FSA	**6SL3210-5HE10-8UF0**	**6FX■002-8QN08-1■■■**
Shaft height 40 – rated speed n_N 3000 rpm										
1.27 (0.94)	3.75 (2.77)	7200	0.4 (0.54)	1.27 (0.94)	0.35 (0.120)	**1FK2104-4AF■■-■■A0**	0.4	FSA	**6SL3210-5HE10-4UF0**	**6FX■002-8QN08-1■■■**
2.4 (1.77)	7.5 (5.53)	6700	0.75 (1.01)	2.4 (1.77)	0.56 (0.191)	**1FK2104-5AF■■-■■A0**	0.75	FSA	**6SL3210-5HE10-8UF0**	**6FX■002-8QN08-1■■■**
3.2 (2.36)	10 (7.38)	7200	1 (1.34)	3.2 (2.36)	0.76 (0.260)	**1FK2104-6AF■■-■■A0**	1	FSA	**6SL3210-5HE11-0UF0**	**6FX■002-8QN08-1■■■**
Shaft height 40 – rated speed n_N 6000 rpm										
1.27 (0.94)	3.85 (2.84)	8000	0.6 (0.80)	0.95 (0.70)	0.35 (0.120)	**1FK2104-4AK■■-■■A0**	1	FSA	**6SL3210-5HE11-0UF0**	**6FX■002-8QN08-1■■■**
2.4 (1.77)	7.6 (5.61)	8000	1.07 (1.43)	1.7 (1.25)	0.56 (0.191)	**1FK2104-5AK■■-■■A0**	1.5	FSB	**6SL3210-5HE11-5UF0**	**6FX■002-8QN08-1■■■**
Shaft height 52 – rated speed n_N 3000 rpm										
5 (3.69)	15 (11.06)	6000	1.45 (1.94)	4.6 (3.39)	1.7 (0.581)	**1FK2105-4AF■■-■■A0**	1.5	FSB	**6SL3210-5HE11-5UF0**	**6FX■002-8QN08-1■■■**
8 (5.90)	24 (17.70)	6000	2.1 (2.82)	6.6 (4.87)	2.7 (0.923)	**1FK2105-6AF■■-■■A0**	2	FSB	**6SL3210-5HE12-0UF0**	**6FX■002-8QN08-1■■■**
Shaft height 63 – rated speed n_N 3000 rpm										
9 (6.64)	26 (19.18)	6000	2.3 (3.08)	7.3 (5.38)	4.6 (1.572)	**1FK2106-3AF■■-■■A0**	5	FSC	**6SL3210-5HE15-0UF0**	**6FX■002-8QN11-1■■■**
12 (8.85)	33 (24.34)	6000	2.7 (3.62)	8.6 (6.34)	6.0 (2.050)	**1FK2106-4AF■■-■■A0**	5	FSC	**6SL3210-5HE15-0UF0**	**6FX■002-8QN11-1■■■**
16 (11.80)	45.5 (33.56)	6000	3.3 (4.43)	10.6 (7.82)	8.7 (2.973)	**1FK2106-6AF■■-■■A0**	7	FSC	**6SL3210-5HE17-0UF0**	**6FX■002-8QN11-1■■■**

Article No. supplements

Holding brake	
Without brake	**0**
With brake	**1**

Degree of protection	
IP64 (without shaft sealing ring)	**0**
IP65 (with shaft sealing ring)	**1**

Shaft extension / feather key	
Plain shaft	**0**
Shaft with feather key	**1**
Plain shaft, reduced shaft diameter • Ø11 × 23 mm (0.43 × 0.91 in) (only for 1FK2.03 and IP64) • Ø14 × 30 mm (0.55 × 1.18 in) (only for 1FK2.04 and IP64)	**2**

Encoder	
AS22DQC (absolute encoder 22-bit singleturn)	**S**
AM22DQC (absolute encoder 22-bit + 12-bit multiturn)	**M**

Pre-assembled MOTION-CONNECT cable	
MOTION-CONNECT 500	**5**
MOTION-CONNECT 800PLUS	**8**

Length code (max. 50 m (164 ft))	
0 m (0 ft)	**A**
10 m (32.8 ft)	**B**
...	...
50 m (164 ft)	**F**

0 m (0 ft)	**A**
1 m (3.28 ft)	**B**
2 m (6.56 ft)	**C**
3 m (9.84 ft)	**D**
4 m (13.1 ft)	**E**
5 m (16.4 ft)	**F**
6 m (19.7 ft)	**G**
7 m (23.0 ft)	**H**
8 m (26.2 ft)	**J**
9 m (29.5 ft)	**K**

0 m (0 ft)	**0**
0.1 m (0.33 ft)	**1**
...	...
0.8 m (2.62 ft)	**8**

© Siemens 2022

Order overview

SINAMICS S210 drive system with SIMOTICS S-1FK2 servomotors for line connection 380 ... 480 V 3 AC (continued)

SIMOTICS S-1FK2 servomotor							SINAMICS S210 servo converter (3 AC series) Supply voltage 380 ... 480 V 3 AC			MOTION-CONNECT motor connection cable
Static torque M_0 Nm (lb$_f$-ft)	Maximum torque M_{max} Nm (lb$_f$-ft)	Maximum speed n_{max} rpm	Rated power 400 V P_N kW (hp)	Rated torque M_N Nm (lb$_f$-ft)	Rotor moment of inertia J_{Mot} kg cm^2 (lb$_f$-in^2)	Article No.	Rated power 400 V P_N kW	Frame size	Article No.	Article No.
Compact for high precision applications							**SINAMICS S210 servo converter**			**One Cable Connection**
Shaft height 30 – rated speed n_N 6000 rpm										
0.64 (0.47)	1.85 (1.36)	8000	0.255 (0.342)	0.405 (0.299)	0.2 (0.068)	**1FK2203-2AK■■-■■A0**	0.4	FSA	**6SL3210-5HE10-4UF0**	**6FX■002-8QN08-1■■■**
1.27 (0.94)	3.75 (2.77)	8000	0.43 (0.58)	0.68 (0.50)	0.35 (0.120)	**1FK2203-4AK■■-■■A0**	0.75	FSA	**6SL3210-5HE10-8UF0**	**6FX■002-8QN08-1■■■**
Shaft height 40 – rated speed n_N 3000 rpm										
2.4 (1.77)	7.1 (5.24)	7500	0.75 (1.01)	2.4 (1.77)	1.2 (0.410)	**1FK2204-5AF■■-■■A0**	0.75	FSA	**6SL3210-5HE10-8UF0**	**6FX■002-8QN08-1■■■**
3.2 (2.36)	9.5 (7.01)	7600	1 (1.34)	3.2 (2.36)	1.6 (0.547)	**1FK2204-6AF■■-■■A0**	1	FSA	**6SL3210-5HE11-0UF0**	**6FX■002-8QN08-1■■■**
Shaft height 40 – rated speed n_N 6000 rpm										
2.4 (1.77)	7.1 (5.24)	8000	0.57 (0.76)	0.9 (0.66)	1.2 (0.410)	**1FK2204-5AK■■-■■A0**	1.5	FSB	**6SL3210-5HE11-5UF0**	**6FX■002-8QN08-1■■■**
Shaft height 48 – rated speed n_N 3000 rpm										
3.6 (2.66)	10.8 (7.97)	6000	0.94 (1.26)	3 (2.21)	3.2 (1.093)	**1FK2205-2AF■■-■■A0**	1	FSA	**6SL3210-5HE11-0UF0**	**6FX■002-8QN08-1■■■**
6 (4.43)	18 (13.28)	6000	1.45 (1.94)	4.6 (3.39)	5.1 (1.743)	**1FK2205-4AF■■-■■A0**	1.5	FSB	**6SL3210-5HE11-5UF0**	**6FX■002-8QN08-1■■■**
Shaft height 63 – rated speed n_N 3000 rpm										
6.5 (4.79)	18 (13.28)	6000	1.71 (2.29)	5.4 (3.98)	7.8 (2.665)	**1FK2206-2AF■■-■■A0**	1.5	FSB	**6SL3210-5HE11-5UF0**	**6FX■002-8QN11-1■■■**
12 (8.85)	36 (26.55)	5800	2.85 (3.82)	9.1 (6.71)	15 (5.126)	**1FK2206-4AF■■-■■A0**	3.5	FSC	**6SL3210-5HE13-5UF0**	**6FX■002-8QN11-1■■■**
Shaft height 80 – rated speed n_N 2000 rpm										
18 (13.28)	51 (37.62)	4100	3.05 (4.09)	14.5 (10.70)	30 (10.251)	**1FK2208-3AC■■-■■A0**	3.5	FSC	**6SL3210-5HE13-5UF0**	**6FX■002-8QN11-1■■■**
22 (16.23)	66 (48.68)	4600	3.55 (4.76)	17 (12.54)	39 (13.326)	**1FK2208-4AC■■-■■A0**	5	FSC	**6SL3210-5HE15-0UF0**	**6FX■002-8QN11-1■■■**
27 (19.92)	80 (59.01)	4700	4 (5.36)	19.1 (14.09)	48 (16.402)	**1FK2208-5AC■■-■■A0**	7	FSC	**6SL3210-5HE17-0UF0**	**6FX■002-8QN11-1■■■**
Shaft height 100 – rated speed n_N 1500 rpm										
30 (22.13)	90 (66.38)	2500	4.5 (6.03)	28.5 (21.02)	89 (30.411)	**1FK2210-3AB■■-■■A0**	3.5	FSC	**6SL3210-5HE13-5UF0**	**6FX■002-8QN11-1■■■**
40 (29.50)	120 (88.51)	2500	5.4 (7.24)	34.5 (25.45)	120 (41.004)	**1FK2210-4AB■■-■■A0**	5	FSC	**6SL3210-5HE15-0UF0**	**6FX■002-8QN11-1■■■**
Shaft height 100 – rated speed n_N 2000 rpm										
30 (22.13)	90 (66.38)	4400	5.5 (7.38)	26 (19.18)	89 (30.411)	**1FK2210-3AC■■-■■A0**	7	FSC	**6SL3210-5HE17-0UF0**	**6FX■002-8QN11-1■■■**
40 (29.50)	120 (88.51)	3300	6.4 (8.58)	30.5 (22.50)	120 (41.004)	**1FK2210-4AC■■-■■A0**	7	FSC	**6SL3210-5HE17-0UF0**	**6FX■002-8QN11-1■■■**

Article No. supplements

Holding brake	
Without brake	**0**
With brake	**1**
Degree of protection	
IP64 (without shaft sealing ring)	**0**
IP65 (with shaft sealing ring)	**1**
Shaft extension / feather key	
Plain shaft	**0**
Shaft with feather key	**1**
Plain shaft, reduced shaft diameter • Ø11 × 23 mm (0.43 × 0.91 in) (only for 1FK2.03 and IP64) • Ø14 × 30 mm (0.55 × 1.18 in) (only for 1FK2.04 and IP64)	**2**
Encoder	
AS22DQC (absolute encoder 22-bit singleturn)	**S**
AM22DQC (absolute encoder 22-bit + 12-bit multiturn)	**M**

Pre-assembled MOTION-CONNECT cable	
MOTION-CONNECT 500	**5**
MOTION-CONNECT 800PLUS	**8**
Length code (max. 50 m (164 ft))	
0 m (0 ft)	**A**
10 m (32.8 ft)	**B**
...	...
50 m (164 ft)	**F**
0 m (0 ft)	**A**
1 m (3.28 ft)	**B**
2 m (6.56 ft)	**C**
3 m (9.84 ft)	**D**
4 m (13.1 ft)	**E**
5 m (16.4 ft)	**F**
6 m (19.7 ft)	**G**
7 m (23.0 ft)	**H**
8 m (26.2 ft)	**J**
9 m (29.5 ft)	**K**
0 m (0 ft)	**0**
0.1 m (0.33 ft)	**1**
...	...
0.8 m (2.62 ft)	**8**

© Siemens 2022

Order overview

SINAMICS S210 drive system with SIMOTICS S-1FT2 servomotors for line connection 200 ... 240 V 1 AC

SIMOTICS S-1FT2 servomotor							SINAMICS S210 servo converter (1 AC series) Supply voltage 200 ... 240 V 1 AC			MOTION-CONNECT motor connection cable
Static torque M_0 Nm (lb$_f$-ft)	Maximum torque M_{max} Nm (lb$_f$-ft)	Maximum speed n_{max} rpm	Rated power 230 V P_N kW (hp)	Rated torque M_N Nm (lb$_f$-ft)	Rotor moment of inertia J_{Mot} kg cm^2 (lb$_f$-in^2)	Article No.	Rated power 230 V P_N kW	Frame size	Article No.	Article No.
High Dynamic for highly dynamic applications							**SINAMICS S210 servo converter**			**One Cable Connection**
Shaft height 20 – rated speed n_N 3000 rpm										
0.16 (0.12)	0.56 (0.41)	8000	0.05 (0.07)	0.16 (0.12)	0.025 (0.009)	**1FT2102-0AG■■-■■A0**	0.1	FSA	**6SL3210-5HB10-1UF0**	**6FX■002-8QN04-1■■■**
0.32 (0.24)	1.11 (0.82)	8000	0.1 (0.13)	0.32 (0.24)	0.036 (0.012)	**1FT2102-1AG■■-■■A0**	0.1	FSA	**6SL3210-5HB10-1UF0**	**6FX■002-8QN04-1■■■**
Shaft height 30 – rated speed n_N 3000 rpm										
0.64 (0.47)	1.95 (1.44)	8000	0.2 (0.27)	0.64 (0.47)	0.093 (0.032)	**1FT2103-2AG■■-■■A0**	0.2	FSA	**6SL3210-5HB10-2UF0**	**6FX■002-8QN04-1■■■**
1.27 (0.94)	4.05 (2.99)	7300	0.4 (0.54)	1.27 (0.94)	0.14 (0.048)	**1FT2103-4AG■■-■■A0**	0.4	FSB	**6SL3210-5HB10-4UF0**	**6FX■002-8QN04-1■■■**
Shaft height 40 – rated speed n_N 1500 rpm										
1.27 (0.94)	3.75 (2.77)	3600	0.2 (0.27)	1.27 (0.94)	0.35 (0.120)	**1FT2104-4AF■■-■■A0**	0.2	FSA	**6SL3210-5HB10-2UF0**	**6FX■002-8QN08-1■■■**
2.4 (1.77)	7.5 (5.53)	3300	0.375 (0.50)	2.4 (1.77)	0.56 (0.191)	**1FT2104-5AF■■-■■A0**	0.4	FSB	**6SL3210-5HB10-4UF0**	**6FX■002-8QN08-1■■■**
3.2 (2.36)	10 (7.38)	3600	0.5 (0.67)	3.2 (2.36)	0.76 (0.260)	**1FT2104-6AF■■-■■A0**	0.75	FSC	**6SL3210-5HB10-8UF0**	**6FX■002-8QN08-1■■■**
Shaft height 40 – rated speed n_N 3000 rpm										
1.27 (0.94)	3.85 (2.84)	7500	0.4 (0.54)	1.27 (0.94)	0.35 (0.120)	**1FT2104-4AK■■-■■A0**	0.4	FSB	**6SL3210-5HB10-4UF0**	**6FX■002-8QN08-1■■■**
2.4 (1.77)	7.6 (5.61)	7100	0.75 (1.01)	2.4 (1.77)	0.56 (0.191)	**1FT2104-5AK■■-■■A0**	0.75	FSC	**6SL3210-5HB10-8UF0**	**6FX■002-8QN08-1■■■**
Compact for high precision applications							**SINAMICS S210 servo converter**			**One Cable Connection**
Shaft height 30 – rated speed n_N 3000 rpm										
0.64 (0.47)	1.85 (1.36)	8000	0.2 (0.27)	0.64 (0.47)	0.20 (0.068)	**1FT2203-2AG■■-■■A0**	0.2	FSA	**6SL3210-5HB10-2UF0**	**6FX■002-8QN04-1■■■**
1.27 (0.94)	3.75 (2.77)	7800	0.4 (0.54)	1.27 (0.94)	0.35 (0.120)	**1FT2203-4AG■■-■■A0**	0.4	FSB	**6SL3210-5HB10-4UF0**	**6FX■002-8QN04-1■■■**
Shaft height 40 – rated speed n_N 1500 rpm										
2.4 (1.77)	7.1 (5.24)	3700	0.375 (0.50)	2.4 (1.77)	1.2 (0.410)	**1FT2204-5AF■■-■■A0**	0.4	FSB	**6SL3210-5HB10-4UF0**	**6FX■002-8QN08-1■■■**
3.2 (2.36)	9.5 (7.01)	3800	0.5 (0.67)	3.2 (2.36)	1.6 (0.547)	**1FT2204-6AF■■-■■A0**	0.75	FSC	**6SL3210-5HB10-8UF0**	**6FX■002-8QN08-1■■■**
Shaft height 40 – rated speed n_N 3000 rpm										
2.4 (1.77)	7.1 (5.24)	7500	0.75 (1.01)	2.4 (1.77)	1.2 (0.410)	**1FT2204-5AK■■-■■A0**	0.75	FSC	**6SL3210-5HB10-8UF0**	**6FX■002-8QN08-1■■■**
Shaft height 48 – rated speed n_N 1500 rpm										
3.6 (2.66)	10.8 (7.97)	3200	0.53 (0.71)	3.4 (2.51)	3.2 (1.093)	**1FT2205-2AF■■-■■A0**	0.75	FSC	**6SL3210-5HB10-8UF0**	**6FX■002-8QN08-1■■■**

Article No. supplements

Holding brake	
Without brake	**0**
With brake	**1**

Degree of protection	
IP64 (without shaft sealing ring)	**0**
IP65 (with shaft sealing ring)	**1**
IP67 (with shaft sealing ring)	**2**

Shaft extension / feather key	
Plain shaft	**0**
Shaft with feather key	**1**
Plain shaft, reduced shaft diameter • Ø11 × 23 mm (0.43 × 0.91 in) (only for 1FT2.03 and IP64) • Ø14 × 30 mm (0.55 × 1.18 in) (only for 1FT2.04 and IP64)	**0 2**

Encoder	
AS22DQC (absolute encoder 22-bit singleturn)	**S**
AM22DQC (absolute encoder 22-bit + 12-bit multiturn)	**M**
AS26DQC (absolute encoder 26-bit singleturn)	**B**
AM26DQC (absolute encoder 26-bit + 12-bit multiturn)	**C**

Pre-assembled MOTION-CONNECT cable	
MOTION-CONNECT 500	**5**
MOTION-CONNECT 800PLUS	**8**

Length code (max. 50 m (164 ft))	
0 m (0 ft)	**A**
10 m (32.8 ft)	**B**
...	...
50 m (164 ft)	**F**

0 m (0 ft)	**A**
1 m (3.28 ft)	**B**
2 m (6.56 ft)	**C**
3 m (9.84 ft)	**D**
4 m (13.1 ft)	**E**
5 m (16.4 ft)	**F**
6 m (19.7 ft)	**G**
7 m (23.0 ft)	**H**
8 m (26.2 ft)	**J**
9 m (29.5 ft)	**K**

0 m (0 ft)	**0**
0.1 m (0.33 ft)	**1**
...	...
0.8 m (2.62 ft)	**8**

© Siemens 2022

Order overview

SINAMICS S210 drive system with SIMOTICS S-1FT2 servomotors for line connection 200 ... 240 V 3 AC

SIMOTICS S-1FT2 servomotor							SINAMICS S210 servo converter (3 AC series) Supply voltage 200 ... 240 V 3 AC			MOTION-CONNECT motor connection cable
Static torque M_0 Nm (lb$_f$-ft)	Maximum torque M_{max} Nm (lb$_f$-ft)	Maximum speed n_{max} rpm	Rated power 240 V P_N kW (hp)	Rated torque M_N Nm (lb$_f$-ft)	Rotor moment of inertia J_{Mot} kg cm^2 (lb$_f$-in^2)	Article No.	Rated power 240 V P_N kW	Frame size	Article No.	Article No.
High Dynamic for highly dynamic applications							**SINAMICS S210 servo converter**			**One Cable Connection**
Shaft height 20 – rated speed n_N 3000 rpm										
0.16 (0.12)	0.56 (0.41)	8000	0.05 (0.07)	0.16 (0.12)	0.025 (0.009)	**1FT2102-0AG■■-■■A0**	0.24	FSA	**6SL3210-5HE10-4UF0**	**6FX■002-8QN04-1■■■**
0.32 (0.24)	1.11 (0.82)	8000	0.1 (0.13)	0.32 (0.24)	0.036 (0.012)	**1FT2102-1AG■■-■■A0**	0.24	FSA	**6SL3210-5HE10-4UF0**	**6FX■002-8QN04-1■■■**
Shaft height 30 – rated speed n_N 3000 rpm										
0.64 (0.47)	1.95 (1.44)	8000	0.2 (0.27)	0.64 (0.47)	0.093 (0.032)	**1FT2103-2AG■■-■■A0**	0.45	FSA	**6SL3210-5HE10-8UF0**	**6FX■002-8QN04-1■■■**
1.27 (0.94)	4.05 (2.99)	8000	0.4 (0.54)	1.27 (0.94)	0.14 (0.048)	**1FT2103-4AG■■-■■A0**	0.6	FSA	**6SL3210-5HE11-0UF0**	**6FX■002-8QN04-1■■■**
Shaft height 40 – rated speed n_N 1500 rpm										
1.27 (0.94)	3.75 (2.77)	7200	0.2 (0.27)	1.27 (0.94)	0.35 (0.120)	**1FT2104-4AF■■-■■A0**	0.24	FSA	**6SL3210-5HE10-4UF0**	**6FX■002-8QN08-1■■■**
2.4 (1.77)	7.5 (5.53)	6700	0.375 (0.50)	2.4 (1.77)	0.56 (0.191)	**1FT2104-5AF■■-■■A0**	0.45	FSA	**6SL3210-5HE10-8UF0**	**6FX■002-8QN08-1■■■**
3.2 (2.36)	10 (7.38)	7200	0.5 (0.67)	3.2 (2.36)	0.76 (0.260)	**1FT2104-6AF■■-■■A0**	0.6	FSA	**6SL3210-5HE11-0UF0**	**6FX■002-8QN08-1■■■**
Shaft height 40 – rated speed n_N 3000 rpm										
1.27 (0.94)	3.85 (2.84)	8000	0.4 (0.54)	1.27 (0.94)	0.35 (0.120)	**1FT2104-4AK■■-■■A0**	0.6	FSA	**6SL3210-5HE11-0UF0**	**6FX■002-8QN08-1■■■**
2.4 (1.77)	7.6 (5.61)	8000	0.75 (1.01)	2.4 (1.77)	0.56 (0.191)	**1FT2104-5AK■■-■■A0**	0.9	FSB	**6SL3210-5HE11-5UF0**	**6FX■002-8QN08-1■■■**
Shaft height 52 – rated speed n_N 1500 rpm										
5 (3.69)	15 (11.06)	7400	0.79 (1.06)	5 (3.69)	1.7 (0.581)	**1FT2105-4AF■■-■■A0**	0.9	FSB	**6SL3210-5HE11-5UF0**	**6FX■002-8QN08-1■■■**
8 (5.90)	24 (17.70)	6600	1.26 (1.69)	8 (5.90)	2.7 (0.923)	**1FT2105-6AF■■-■■A0**	1.2	FSB	**6SL3210-5HE12-0UF0**	**6FX■002-8QN08-1■■■**
Shaft height 52 – rated speed n_N 2500 rpm										
5 (3.69)	15 (11.06)	9000	1.27 (1,70)	4.85 (3.60)	1.7 (0.581)	**1FT2105-4AH■■-■■A0**	2.1	FSC	**6SL3210-5HE13-5UF0**	**6FX■002-8QN08-1■■■**
Shaft height 63 – rated speed n_N 1500 rpm										
9 (6.64)	26 (19.18)	8000	1.3 (1.74)	8.3 (6.12)	4.6 (1.572)	**1FT2106-3AF■■-■■A0**	3	FSC	**6SL3210-5HE15-0UF0**	**6FX■002-8QN11-1■■■**
12 (8.85)	33 (24.34)	7800	1.64 (2.20)	10.5 (7.74)	6.0 (2.050)	**1FT2106-4AF■■-■■A0**	3	FSC	**6SL3210-5HE15-0UF0**	**6FX■002-8QN11-1■■■**
16 (11.80)	45.5 (33.56)	7600	2.15 (2.88)	13.8 (10.18)	8.7 (2.973)	**1FT2106-6AF■■-■■A0**	3	FSC	**6SL3210-5HE15-0UF0**	**6FX■002-8QN11-1■■■**

Article No. supplements

Holding brake	
Without brake	0
With brake	1

Degree of protection	
IP64 (without shaft sealing ring)	0
IP65 (with shaft sealing ring)	1
IP67 (with shaft sealing ring)	2

Shaft extension / feather key	
Plain shaft	0
Shaft with feather key	1
Plain shaft, reduced shaft diameter • Ø11 × 23 mm (0.43 × 0.91 in) (only for 1FT2.03 and IP64) • Ø14 × 30 mm (0.55 × 1.18 in) (only for 1FT2.04 and IP64)	2

Encoder	
AS22DQC (absolute encoder 22-bit singleturn)	S
AM22DQC (absolute encoder 22-bit + 12-bit multiturn)	M
AS26DQC (absolute encoder 26-bit singleturn)	B
AM26DQC (absolute encoder 26-bit + 12-bit multiturn)	C

When operating a SINAMICS S210 servo converter with a supply voltage of 200 V to 240 V 3 AC, an external, intrinsically safe braking resistor is always required.

Pre-assembled MOTION-CONNECT cable	
MOTION-CONNECT 500	5
MOTION-CONNECT 800PLUS	8

Length code (max. 50 m (164 ft))	
0 m (0 ft)	A
10 m (32.8 ft)	B
...	...
50 m (164 ft)	F

0 m (0 ft)	A
1 m (3.28 ft)	B
2 m (6.56 ft)	C
3 m (9.84 ft)	D
4 m (13.1 ft)	E
5 m (16.4 ft)	F
6 m (19.7 ft)	G
7 m (23.0 ft)	H
8 m (26.2 ft)	J
9 m (29.5 ft)	K

0 m (0 ft)	0
0.1 m (0.33 ft)	1
...	...
0.8 m (2.62 ft)	8

© Siemens 2022

Order overview

SINAMICS S210 drive system with SIMOTICS S-1FT2 servomotors for line connection 200 ... 240 V 3 AC (continued)

SIMOTICS S-1FT2 servomotor							SINAMICS S210 servo converter (3 AC series) Supply voltage 200 ... 240 V 3 AC			MOTION-CONNECT motor connection cable
Static torque M_0 Nm (lb$_f$-ft)	Maximum torque M_{max} Nm (lb$_f$-ft)	Maximum speed n_{max} rpm	Rated power 240 V P_N kW (hp)	Rated torque M_N Nm (lb$_f$-ft)	Rotor moment of inertia J_{Mot} kg cm^2 (lb$_f$-in^2)	Article No.	Rated power 240 V P_N kW	Frame size	Article No.	Article No.
Compact for high precision applications							**SINAMICS S210 servo converter**			**One Cable Connection**
Shaft height 30 – rated speed n_N 3000 rpm										
0.64 (0.47)	1.85 (1.36)	8000	0.2 (0.27)	0.64 (0.47)	0.20 (0.068)	**1FT2203-2AG■■-■■A0**	0.45	FSA	**6SL3210-5HE10-8UF0**	**6FX■002-8QN04-1■■■**
1.27 (0.94)	3.75 (2.77)	8000	0.4 (0.54)	1.27 (0.94)	0.35 (0.120)	**1FT2203-4AG■■-■■A0**	0.6	FSA	**6SL3210-5HE11-0UF0**	**6FX■002-8QN04-1■■■**
Shaft height 40 – rated speed n_N 1500 rpm										
2.4 (1.77)	7.1 (5.24)	7500	0.375 (0.50)	2.4 (1.77)	1.2 (0.410)	**1FT2204-5AF■■-■■A0**	0.45	FSA	**6SL3210-5HE10-8UF0**	**6FX■002-8QN08-1■■■**
3.2 (2.36)	9.5 (7.01)	7600	0.5 (0.67)	3.2 (2.36)	1.6 (0.547)	**1FT2204-6AF■■-■■A0**	0.6	FSA	**6SL3210-5HE11-0UF0**	**6FX■002-8QN08-1■■■**
Shaft height 40 – rated speed n_N 3000 rpm										
2.4 (1.77)	7.1 (5.24)	8000	0.75 (1.01)	2.4 (1.77)	1.2 (0.410)	**1FT2204-5AK■■-■■A0**	0.9	FSB	**6SL3210-5HE11-5UF0**	**6FX■002-8QN08-1■■■**
Shaft height 48 – rated speed n_N 1500 rpm										
3.6 (2.66)	10.8 (7.97)	6500	0.53 (0.71)	3.4 (2.51)	3.2 (1.093)	**1FT2205-2AF■■-■■A0**	0.6	FSA	**6SL3210-5HE11-0UF0**	**6FX■002-8QN08-1■■■**
6 (4.43)	18 (13.28)	6200	0.86 (1.15)	5.5 (4.06)	5.1 (1.743)	**1FT2205-4AF■■-■■A0**	0.9	FSB	**6SL3210-5HE11-5UF0**	**6FX■002-8QN08-1■■■**
Shaft height 48 – rated speed n_N 2500 rpm										
3.6 (2.66)	10.8 (7.97)	8300	0.82 (1.10)	3.15 (2.30)	3.2 (1.093)	**1FT2205-2AH■■-■■A0**	0.9	FSB	**6SL3210-5HE11-5UF0**	**6FX■002-8QN08-1■■■**
Shaft height 63 – rated speed n_N 1500 rpm										
6.5 (4.79)	18 (13.28)	6800	0.97 (1.30)	6.1 (4.50)	7.8 (2.665)	**1FT2206-2AF■■-■■A0**	0.9	FSB	**6SL3210-5HE11-5UF0**	**6FX■002-8QN11-1■■■**
12 (8.85)	36 (26.55)	5800	1.72 (2.31)	10.9 (8.04)	15 (5.126)	**1FT2206-4AF■■-■■A0**	2.1	FSC	**6SL3210-5HE13-5UF0**	**6FX■002-8QN11-1■■■**
Shaft height 63 – rated speed n_N 2500 rpm										
6.5 (4.79)	18 (13.28)	8000	1.45 (1.94)	5.5 (4.06)	7.8 (2.665)	**1FT2206-2AH■■-■■A0**	0.9	FSB	**6SL3210-5HE11-5UF0**	**6FX■002-8QN11-1■■■**
12 (8.85)	36 (26.55)	8000	2.4 (3.22)	9.3 (6.90)	15 (5.126)	**1FT2206-4AH■■-■■A0**	3	FSC	**6SL3210-5HE15-0UF0**	**6FX■002-8QN11-1■■■**
Shaft height 80 – rated speed n_N 1000 rpm										
18 (13.28)	51 (37.62)	4100	1.74 (2.33)	16.6 (12.24)	30 (10.251)	**1FT2208-3AC■■-■■A0**	2.1	FSC	**6SL3210-5HE13-5UF0**	**6FX■002-8QN11-1■■■**
22 (16.23)	66 (48.68)	4600	2.15 (2.88)	20 (14.75)	39 (13.326)	**1FT2208-4AC■■-■■A0**	3	FSC	**6SL3210-5HE15-0UF0**	**6FX■002-8QN11-1■■■**
27 (19.92)	80 (59.01)	4700	2.5 (3.35)	23.5 (17.33)	48 (16.402)	**1FT2208-5AC■■-■■A0**	4.2	FSC	**6SL3210-5HE17-0UF0**	**6FX■002-8QN11-1■■■**
Shaft height 80 – rated speed n_N 1500 rpm										
18 (13.28)	51 (37.62)	5600	2.4 (3.22)	15 (11.1)	30 (10.251)	**1FT2208-3AF■■-■■A0**	3	FSC	**6SL3210-5HE15-0UF0**	**6FX■002-8QN11-1■■■**
22 (16.23)	66 (48.68)	5900	2.75 (3.69	18 (13.3)	39 (13.326)	**1FT2208-4AF■■-■■A0**	4.2	FSC	**6SL3210-5HE17-0UF0**	**6FX■002-8QN11-1■■■**
Shaft height 100 – rated speed n_N 750 rpm										
30 (22.13)	90 (66.38)	2500	2.5 (3.35)	30 (22.13)	89 (30.411)	**1FT2210-3AB■■-■■A0**	2.1	FSC	**6SL3210-5HE13-5UF0**	**6FX■002-8QN11-1■■■**
40 (29.50)	120 (88.51)	2500	3.05 (4.09)	39 (28.77)	120 (41.004)	**1FT2210-4AB■■-■■A0**	3	FSC	**6SL3210-5HE15-0UF0**	**6FX■002-8QN11-1■■■**
Shaft height 100 – rated speed n_N 1000 rpm										
30 (22.13)	90 (66.38)	4400	3.2 (4.29)	30 (22.13)	89 (30.411)	**1FT2210-3AC■■-■■A0**	4.2	FSC	**6SL3210-5HE17-0UF0**	**6FX■002-8QN11-1■■■**
40 (29.50)	120 (88.51)	3300	3.9 (5.23)	37 (27.29)	120 (41.004)	**1FT2210-4AC■■-■■A0**	4.2	FSC	**6SL3210-5HE17-0UF0**	**6FX■002-8QN11-1■■■**

Article No. supplements

Holding brake	
Without brake	**0**
With brake	**1**
Degree of protection	
IP64 (without shaft sealing ring)	**0**
IP65 (with shaft sealing ring)	**1**
IP67 (with shaft sealing ring)	**2**
Shaft extension / feather key	
Plain shaft	**0**
Shaft with feather key	**1**
Plain shaft, reduced shaft diameter • Ø11 × 23 mm (0.43 × 0.91 in) (only for 1FT2.03 and IP64) • Ø14 × 30 mm (0.55 × 1.18 in) (only for 1FT2.04 and IP64)	**2**
Encoder	
AS22DQC (absolute encoder 22-bit singleturn)	**S**
AM22DQC (absolute encoder 22-bit + 12-bit multiturn)	**M**
AS26DQC (absolute encoder 26-bit singleturn)	**B**
AM26DQC (absolute encoder 26-bit + 12-bit multiturn)	**C**

When operating a SINAMICS S210 servo converter with a supply voltage of 200 V to 240 V 3 AC, an external, intrinsically safe braking resistor is always required.

Pre-assembled MOTION-CONNECT cable	
MOTION-CONNECT 500	**5**
MOTION-CONNECT 800PLUS	**8**
Length code (max. 50 m (164 ft))	
0 m (0 ft)	**A**
10 m (32.8 ft)	**B**
...	...
50 m (164 ft)	**F**
0 m (0 ft)	**A**
1 m (3.28 ft)	**B**
2 m (6.56 ft)	**C**
3 m (9.84 ft)	**D**
4 m (13.1 ft)	**E**
5 m (16.4 ft)	**F**
6 m (19.7 ft)	**G**
7 m (23.0 ft)	**H**
8 m (26.2 ft)	**J**
9 m (29.5 ft)	**K**
0 m (0 ft)	**0**
0.1 m (0.33 ft)	**1**
...	...
0.8 m (2.62 ft)	**8**

© Siemens 2022

Order overview

SINAMICS S210 drive system with SIMOTICS S-1FT2 servomotors for line connection 380 ... 480 V 3 AC

SIMOTICS S-1FT2 servomotor							SINAMICS S210 servo converter (3 AC series) Supply voltage 380 ... 480 V 3 AC			MOTION-CONNECT motor connection cable
Static torque M_0 Nm (lb$_f$-ft)	Maximum torque M_{max} Nm (lb$_f$-ft)	Maximum speed n_{max} rpm	Rated power 400 V P_N kW (hp)	Rated torque M_N Nm (lb$_f$-ft)	Rotor moment of inertia J_{Mot} kg cm^2 (lb$_f$-in^2)	Article No.	Rated power 400 V P_N kW	Frame size	Article No.	Article No.
High Dynamic for highly dynamic applications							**SINAMICS S210 servo converter**			**One Cable Connection**
Shaft height 30 – rated speed n_N 4500 rpm										
0.64 (0.47)	1.95 (1.44)	8000	0.28 (0.38)	0.59 (0.44)	0.093 (0.032)	**1FT2103-2AH■■-■■A0**	0.4	FSA	**6SL3210-5HE10-4UF0**	**6FX■002-8QN08-1■■■**
1.27 (0.94)	4.05 (2.99)	8000	0.48 (0.64)	1.01 (0.74)	0.14 (0.048)	**1FT2103-4AH■■-■■A0**	0.75	FSA	**6SL3210-5HE10-8UF0**	**6FX■002-8QN08-1■■■**
Shaft height 40 – rated speed n_N 3000 rpm										
1.27 (0.94)	3.75 (2.77)	7200	0.4 (0.54)	1.27 (0.94)	0.35 (0.120)	**1FT2104-4AF■■-■■A0**	0.4	FSA	**6SL3210-5HE10-4UF0**	**6FX■002-8QN08-1■■■**
2.4 (1.77)	7.5 (5.53)	6700	0.75 (1.01)	2.4 (1.77)	0.56 (0.191)	**1FT2104-5AF■■-■■A0**	0.75	FSA	**6SL3210-5HE10-8UF0**	**6FX■002-8QN08-1■■■**
3.2 (2.36)	10 (7.38)	7200	1 (1.34)	3.2 (2.36)	0.76 (0.260)	**1FT2104-6AF■■-■■A0**	1	FSA	**6SL3210-5HE11-0UF0**	**6FX■002-8QN08-1■■■**
Shaft height 40 – rated speed n_N 6000 rpm										
1.27 (0.94)	3.85 (2.84)	8000	0.6 (0.80)	0.95 (0.70)	0.35 (0.120)	**1FT2104-4AK■■-■■A0**	1	FSA	**6SL3210-5HE11-0UF0**	**6FX■002-8QN08-1■■■**
2.4 (1.77)	7.6 (5.61)	8000	1.07 (1.43)	1.7 (1.25)	0.56 (0.191)	**1FT2104-5AK■■-■■A0**	1.5	FSB	**6SL3210-5HE11-5UF0**	**6FX■002-8QN08-1■■■**
Shaft height 52 – rated speed n_N 3000 rpm										
5 (3.69)	15 (11.06)	7400	1.45 (1.94)	4.6 (3.39)	1.7 (0.581)	**1FT2105-4AF■■-■■A0**	1.5	FSB	**6SL3210-5HE11-5UF0**	**6FX■002-8QN08-1■■■**
8 (5.90)	24 (17.70)	6600	2.1 (2.82)	6.6 (4.87)	2.7 (0.923)	**1FT2105-6AF■■-■■A0**	2	FSB	**6SL3210-5HE12-0UF0**	**6FX■002-8QN08-1■■■**
Shaft height 52 – rated speed n_N 4500 rpm										
5 (3.69)	15 (11.06)	9000	1.74 (2.28)	3.7 (2.70)	1.7 (0.581)	**1FT2105-4AH■■-■■A0**	3.5	FSC	**6SL3210-5HE13-5UF0**	**6FX■002-8QN08-1■■■**
Shaft height 63 – rated speed n_N 3000 rpm										
9 (6.64)	26 (19.18)	8000	2.3 (3.08)	7.3 (5.38)	4.6 (1.572)	**1FT2106-3AF■■-■■A0**	5	FSC	**6SL3210-5HE15-0UF0**	**6FX■002-8QN11-1■■■**
12 (8.85)	33 (24.34)	7800	2.7 (3.62)	8.6 (6.34)	6.0 (2.050)	**1FT2106-4AF■■-■■A0**	5	FSC	**6SL3210-5HE15-0UF0**	**6FX■002-8QN11-1■■■**
16 (11.80)	45.5 (33.56)	7600	3.3 (4.43)	10.6 (7.82)	8.7 (2.973)	**1FT2106-6AF■■-■■A0**	7	FSC	**6SL3210-5HE17-0UF0**	**6FX■002-8QN11-1■■■**

Article No. supplements

Holding brake	
Without brake	**0**
With brake	**1**

Degree of protection	
IP64 (without shaft sealing ring)	**0**
IP65 (with shaft sealing ring)	**1**
IP67 (with shaft sealing ring)	**2**

Shaft extension / feather key	
Plain shaft	**0**
Shaft with feather key	**1**
Plain shaft, reduced shaft diameter • Ø11 × 23 mm (0.43 × 0.91 in) (only for 1FT2.03 and IP64) • Ø14 × 30 mm (0.55 × 1.18 in) (only for 1FT2.04 and IP64)	**2**

Encoder	
AS22DQC (absolute encoder 22-bit singleturn)	**S**
AM22DQC (absolute encoder 22-bit + 12-bit multiturn)	**M**
AS26DQC (absolute encoder 26-bit singleturn)	**B**
AM26DQC (absolute encoder 26-bit + 12-bit multiturn)	**C**

Pre-assembled MOTION-CONNECT cable	
MOTION-CONNECT 500	**5**
MOTION-CONNECT 800PLUS	**8**

Length code (max. 50 m (164 ft))	
0 m (0 ft)	**A**
10 m (32.8 ft)	**B**
...	...
50 m (164 ft)	**F**

0 m (0 ft)	**A**
1 m (3.28 ft)	**B**
2 m (6.56 ft)	**C**
3 m (9.84 ft)	**D**
4 m (13.1 ft)	**E**
5 m (16.4 ft)	**F**
6 m (19.7 ft)	**G**
7 m (23.0 ft)	**H**
8 m (26.2 ft)	**J**
9 m (29.5 ft)	**K**

0 m (0 ft)	**0**
0.1 m (0.33 ft)	**1**
...	...
0.8 m (2.62 ft)	**8**

© Siemens 2022

Order overview

SINAMICS S210 drive system with SIMOTICS S-1FT2 servomotors for line connection 380 ... 480 V 3 AC (continued)

SIMOTICS S-1FT2 servomotor							SINAMICS S210 servo converter (3 AC series) Supply voltage 380 ... 480 V 3 AC			MOTION-CONNECT motor connection cable
Static torque M_0 Nm (lb$_f$-ft)	Maximum torque M_{max} Nm (lb$_f$-ft)	Maximum speed n_{max} rpm	Rated power 400 V P_N kW (hp)	Rated torque M_N Nm (lb$_f$-ft)	Rotor moment of inertia J_{Mot} kg cm^2 (lb$_f$-in^2)	Article No.	Rated power 400 V P_N kW	Frame size	Article No.	Article No.
Compact for high precision applications							**SINAMICS S210 servo converter**			**One Cable Connection**
Shaft height 30 – rated speed n_N 6000 rpm										
0.64 (0.47)	1.85 (1.36)	8000	0.255 (0.342)	0.405 (0.299)	0.2 (0.068)	**1FT2203-2AK■■-■■A0**	0.4	FSA	**6SL3210-5HE10-4UF0**	**6FX■002-8QN08-1■■■**
1.27 (0.94)	3.75 (2.77)	8000	0.43 (0.58)	0.68 (0.50)	0.35 (0.120)	**1FT2203-4AK■■-■■A0**	0.75	FSA	**6SL3210-5HE10-8UF0**	**6FX■002-8QN08-1■■■**
Shaft height 40 – rated speed n_N 3000 rpm										
2.4 (1.77)	7.1 (5.24)	7500	0.75 (1.01)	2.4 (1.77)	1.2 (0.410)	**1FT2204-5AF■■-■■A0**	0.75	FSA	**6SL3210-5HE10-8UF0**	**6FX■002-8QN08-1■■■**
3.2 (2.36)	9.5 (7.01)	7600	1 (1.34)	3.2 (2.36)	1.6 (0.547)	**1FT2204-6AF■■-■■A0**	1	FSA	**6SL3210-5HE11-0UF0**	**6FX■002-8QN08-1■■■**
Shaft height 40 – rated speed n_N 6000 rpm										
2.4 (1.77)	7.1 (5.24)	8000	0.57 (0.76)	0.9 (0.66)	1.2 (0.410)	**1FT2204-5AK■■-■■A0**	1.5	FSB	**6SL3210-5HE11-5UF0**	**6FX■002-8QN08-1■■■**
Shaft height 48 – rated speed n_N 3000 rpm										
3.6 (2.66)	10.8 (7.97)	6500	0.94 (1.26)	3 (2.21)	3.2 (1.093)	**1FT2205-2AF■■-■■A0**	1	FSA	**6SL3210-5HE11-0UF0**	**6FX■002-8QN08-1■■■**
6 (4.43)	18 (13.28)	6200	1.45 (1.94)	4.6 (3.39)	5.1 (1.743)	**1FT2205-4AF■■-■■A0**	1.5	FSB	**6SL3210-5HE11-5UF0**	**6FX■002-8QN08-1■■■**
Shaft height 48 – rated speed n_N 4500 rpm										
3.6 (2.66)	10.8 (7.97)	8300	1.1 (1.48)	2.3 (1.7)	3.2 (1.093)	**1FT2205-2AH■■-■■A0**	1.5	FSB	**6SL3210-5HE11-5UF0**	**6FX■002-8QN08-1■■■**
Shaft height 63 – rated speed n_N 3000 rpm										
6.5 (4.79)	18 (13.28)	6800	1.71 (2.29)	5.4 (3.98)	7.8 (2.665)	**1FT2206-2AF■■-■■A0**	1.5	FSB	**6SL3210-5HE11-5UF0**	**6FX■002-8QN11-1■■■**
12 (8.85)	36 (26.55)	5800	2.85 (3.82)	9.1 (6.71)	15 (5.126)	**1FT2206-4AF■■-■■A0**	3.5	FSC	**6SL3210-5HE13-5UF0**	**6FX■002-8QN11-1■■■**
Shaft height 63 – rated speed n_N 4500 rpm										
6.5 (4.79)	18 (13.28)	8000	1.8 (2.41)	3.9 (2.9)	7.8 (2.665)	**1FT2206-2AH■■-■■A0**	2	FSB	**6SL3210-5HE12-0UF0**	**6FX■002-8QN11-1■■■**
12 (8.85)	36 (26.55)	8000	2.2 (2.95)	4.7 (3.47)	15 (5.126)	**1FT2206-4AH■■-■■A0**	5	FSC	**6SL3210-5HE15-0UF0**	**6FX■002-8QN11-1■■■**
Shaft height 80 – rated speed n_N 2000 rpm										
18 (13.28)	51 (37.62)	4100	3.05 (4.09)	14.5 (10.70)	30 (10.251)	**1FT2208-3AC■■-■■A0**	3.5	FSC	**6SL3210-5HE13-5UF0**	**6FX■002-8QN11-1■■■**
22 (16.23)	66 (48.68)	4600	3.55 (4.76)	17 (12.54)	39 (13.326)	**1FT2208-4AC■■-■■A0**	5	FSC	**6SL3210-5HE15-0UF0**	**6FX■002-8QN11-1■■■**
27 (19.92)	80 (59.01)	4700	4 (5.36)	19.1 (14.09)	48 (16.402)	**1FT2208-5AC■■-■■A0**	7	FSC	**6SL3210-5HE17-0UF0**	**6FX■002-8QN11-1■■■**
Shaft height 80 – rated speed n_N 3000 rpm										
18 (13.28)	51 (37.62)	5600	3.5 (4.69)	11 (8.0)	30 (10.251)	**1FT2208-3AF■■-■■A0**	5	FSC	**6SL3210-5HE15-0UF0**	**6FX■002-8QN11-1■■■**
22 (16.23)	66 (48.68)	5900	3.7 (4.96)	12 (9.0)	39 (13.326)	**1FT2208-4AF■■-■■A0**	7	FSC	**6SL3210-5HE17-0UF0**	**6FX■002-8QN11-1■■■**
Shaft height 100 – rated speed n_N 1500 rpm										
30 (22.13)	90 (66.38)	2500	4.5 (6.03)	28.5 (21.02)	89 (30.411)	**1FT2210-3AB■■-■■A0**	3.5	FSC	**6SL3210-5HE13-5UF0**	**6FX■002-8QN11-1■■■**
40 (29.50)	120 (88.51)	2500	5.4 (7.24)	34.5 (25.45)	120 (41.004)	**1FT2210-4AB■■-■■A0**	5	FSC	**6SL3210-5HE15-0UF0**	**6FX■002-8QN11-1■■■**
Shaft height 100 – rated speed n_N 2000 rpm										
30 (22.13)	90 (66.38)	4400	5.5 (7.38)	26 (19.18)	89 (30.411)	**1FT2210-3AC■■-■■A0**	7	FSC	**6SL3210-5HE17-0UF0**	**6FX■002-8QN11-1■■■**
40 (29.50)	120 (88.51)	3300	6.4 (8.58)	30.5 (22.50)	120 (41.004)	**1FT2210-4AC■■-■■A0**	7	FSC	**6SL3210-5HE17-0UF0**	**6FX■002-8QN11-1■■■**

Article No. supplements

Holding brake	
Without brake	**0**
With brake	**1**
Degree of protection	
IP64 (without shaft sealing ring)	**0**
IP65 (with shaft sealing ring)	**1**
IP67 (with shaft sealing ring)	**2**
Shaft extension / feather key	
Plain shaft	**0**
Shaft with feather key	**1**
Plain shaft, reduced shaft diameter • Ø11 × 23 mm (0.43 × 0.91 in) (only for 1FT2.03 and IP64) • Ø14 × 30 mm (0.55 × 1.18 in) (only for 1FT2.04 and IP64)	**0 2**
Encoder	
AS22DQC (absolute encoder 22-bit singleturn)	**S**
AM22DQC (absolute encoder 22-bit + 12-bit multiturn)	**M**
AS26DQC (absolute encoder 26-bit singleturn)	**B**
AM26DQC (absolute encoder 26-bit + 12-bit multiturn)	**C**

Pre-assembled MOTION-CONNECT cable	
MOTION-CONNECT 500	**5**
MOTION-CONNECT 800PLUS	**8**
Length code (max. 50 m (164 ft))	
0 m (0 ft)	**A**
10 m (32.8 ft)	**B**
...	...
50 m (164 ft)	**F**
0 m (0 ft)	**A**
1 m (3.28 ft)	**B**
2 m (6.56 ft)	**C**
3 m (9.84 ft)	**D**
4 m (13.1 ft)	**E**
5 m (16.4 ft)	**F**
6 m (19.7 ft)	**G**
7 m (23.0 ft)	**H**
8 m (26.2 ft)	**J**
9 m (29.5 ft)	**K**
0 m (0 ft)	**0**
0.1 m (0.33 ft)	**1**
...	...
0.8 m (2.62 ft)	**8**

© Siemens 2022

Order overview

SINAMICS S210 drive system with SIMOTICS S-1FS2 servomotors

SIMOTICS S-1FS2 servomotor								SINAMICS S210 servo converter	
Static torque	Maximum torque	Maximum speed for 380 ... 480 V 3 AC[1]	Rated power	Rated torque	Rotor moment of inertia without/with brake		Additional order code for cable end and cable length	Supply voltage 200 ... 240 V 1 AC	Supply voltage 200 ... 240 V 3 AC and 400 ... 480 V 3 AC
M_0 Nm (lb_f-ft)	M_{max} Nm (lb_f-ft)	n_{max} rpm	P_N kW (hp)	M_N Nm (lb_f-ft)	J_{Mot} kg cm^2 (lb_f-in^2)	Article No.	Order code	Article No.	Article No.
Shaft height 40 – rated speed n_N 3000 rpm									
3.1 (2.29)	10 (7.38)	7200	0.8 (1.07)	2.55 (1.88)	0.72/0.8 (0.246/ 0.273)	**1FS2104-6AF■7-■MZ0**	**Q■■**	**6SL3210-5HB10-8UF0**	**6SL3210-5HE11-0UF0**
Shaft height 52 – rated speed n_N 3000 rpm									
7.6 (5.61)	24 (17.7)	6000	1.29 (1.73)	4.1 (3.02)	2.8/3.6 (0.957/ 1.230)	**1FS2105-6AF■7-■MZ0**	**Q■■**	–	**6SL3210-5HE12-0UF0**
Shaft height 63 – rated speed n_N 2500 rpm									
14 (10.3)	42 (31)	6000	1.81 (2.43)	6.9 (5.09)	–/11 (–/3.759)	**1FS2106-6AE■7-■MZ0**	**Q■■**	–	**6SL3210-5HE15-0UF0**
Shaft height 63 – rated speed n_N 3000 rpm									
14 (10.3)	42 (31)	6000	1.95 (2.61)	6.2 (4.57)	9/– (3.075/–)	**1FS2106-6AF■7-■MZ0**	**Q■■**	–	**6SL3210-5HE15-0UF0**
Shaft height 80 – rated speed n_N 2000 rpm									
23.5 (21.39)	80 (59.1)	4750	2.51 (3.37)	12 (8.85)	49/55 (16.743/ 18.794)	**1FS2208-5AC■7-■MZ0**	**Q■■**	–	**6SL3210-5HE17-0UF0**

Article No. supplements	
Holding brake	
Without brake	**0**
With brake	**1**

Shaft extension / feather key	
Plain shaft	**0**
Shaft with feather key	**1**

Supplements for the additional order code	
Cable end	
Free cable ends for direct connection to the converter	**0**
Cable end with SPEED-CONNECT coupling M17 (1FS2104 and 1FS2105) or M23 (1FS2106 and 1FS2208)	**1**

Cable length	
0.5 m (1.64 ft)	**A**
1 m (3.28 ft)	**B**
1.5 m (4.92 ft)	**C**
2 m (6.56 ft)	**D**
2.5 m (8.20 ft)	**E**
3 m (9.84 ft)	**F**
3.5 m (11.48 ft)	**G**
4 m (13.12 ft)	**H**
4.5 m (14.76 ft)	**J**
5 m (16.41 ft)	**K**
5.5 m (18.05 ft)	**L**
6 m (19.69 ft)	**M**
6.5 m (21.33 ft)	**N**
7 m (22.97 ft)	**P**
7.5 m (24.61 ft)	**Q**
8 m (26.25 ft)	**R**
8.5 m (27.89 ft)	**S**
9 m (29.53 ft)	**T**
9.5 m (31.17 ft)	**U**
10 m (32.81 ft)	**V**
10.5 m (34.45 ft)	**W**
11 m (36.09 ft)	**X**

[1] Values for operation at 200 ... 240 V 1/3 AC, see chapter 3.3 "SIMOTICS S-1FS2 servomotors for SINAMICS S210".

© Siemens 2022

Order overview

SIMOTICS S-1FK2 and 1FT2 servo planetary geared motors

SIMOTICS S-1FK2 and S-1FT2 servo planetary geared motors

Basic motor — Article No. — Planetary gearbox — Order codes

1F ■ 2.0 - . A . ■ ■ - . ■ ■ 0 -Z ■ ■ ■ + ■ ■ ■ + ■ ■ ■

| | | |

© Siemens 2022

Order overview

Accessories for SINAMICS S210 servo converters

Description	Article No.
SINAMICS SD card (optional) 512 MB	
The parameter assignment, firmware and licenses for a converter can be stored on this memory card.	
Firmware V5.2 or higher is required for the 3 AC series.	
• Empty	**6SL3054-4AG00-2AA0**
• With firmware V5.1	**6SL3054-4FB00-2BA0**
• With firmware V5.1 SP1	**6SL3054-4FB10-2BA0**
• With firmware V5.1 SP1 and Safety license (Extended Functions)	**6SL3054-4FB10-2BA0-Z F01**
• With firmware V5.2	**6SL3054-4FC00-2BA0**
• With firmware V5.2 and Safety license (Extended Functions)	**6SL3054-4FC00-2BA0-Z F01**
• With firmware V5.2 SP3	**6SL3054-4FC30-2BA0**
• With firmware V5.2 SP3 and Safety license (Extended Functions)	**6SL3054-4FC30-2BA0-Z F01**
Safety license (Extended Functions) [1]	
• CoL in paper form	**6SL3074-0AA10-0AA0**
• CoL in electronic form	**6SL3074-0AA10-0AH0**
PROFINET patch cable For the networking of concatenated converters	
• 0.3 m	**6XV1870-3QE30**
• 0.5 m	**6XV1870-3QE50**
Only for the 1 AC series	
Line filter	
With this line filter, Category C2 for cable lengths up to 25 m (82 ft), Category C3 for cable lengths up to 50 m (164 ft) acc. to IEC 61800-3 can be achieved.	
• ≤ 18 A	**6SL3203-0BB21-8VA1**
Only for the 3 AC series	
Line filter With these line filters, Category C2 for cable lengths up to 25 m (82 ft), Category C3 for cable lengths up to 50 m (164 ft) acc. to IEC 61800-3 can be achieved. When connected via a DC link, a total cable length of up to 100 m (328 ft) with Category C2 and up to 250 m (820 ft) with Category C3 is possible [2]	
• ≤ 35 A	**6SL3203-0BE23-5HA0**
• ≤ 65 A	**6SL3203-0BE26-5HA0**
Connector set AC bus and DC link	**6SL3260-2DC00-0AA0**
For coupling the DC link and the line infeed	
Scope of delivery: 1 AC bus connector, 1 DC link connector, 2 cover caps	
The AC bus connector replaces the push-in connector included in the scope of delivery of the converter. Wiring is performed with conventional 16 mm^2 cable (not included in scope of delivery) [3]	
Connector set AC bus individual	**6SL3260-2DC10-0AA0**
For coupling the line infeed	
Scope of delivery: 1 AC bus connector, 1 cover cap	
This connector replaces the push-in connector included in the scope of delivery of the converter. Wiring is performed with conventional 16 mm^2 cable (not included in scope of delivery) [3]	
External braking resistors for 200 … 240 V 3 AC	
For a supply voltage of 200 V to 240 V 3 AC, an external, intrinsically safe braking resistor is always required for each converter [4]	
• 100 W, 47 Ω for FSA and FSB	**GXK:BWG250047TS-190**
• 240 W, 14 Ω for FSC	**GXK:BWG600014TS-190**

Accessories for SIMOTICS S-1FK2 and S-1FT2 servomotors

Description	For motor	Article No.
Shaft sealing ring (optional) To achieve degree of protection IP65 for retrofitting or as spare part	1FK2102 1FT2102	**1FY2902-0GC00**
	1FK2.03 1FT2.03	**1FY2903-0GC00**
	1FK2.04 1FT2.04	**1FY2904-0GC00**

Starter kit

Description	Article No.
SINAMICS S210 starter kit with Extended Safety Scope of delivery: • SINAMICS S210 servo converter, 230 V 1 AC, 400 W • SIMOTICS S-1FK2 servomotor, High Dynamic, shaft height 30, 400 W, without brake, shaft with feather key, with absolute encoder multiturn • One Cable Connection (OCC) motor connection cables, 3 m (9.84 ft) • Memory card with firmware V5.2 SP3 and Safety license (Extended Functions) The delivery quantity is limited to three units per customer.	**6SL3200-0AE61-0AA0**

Training case

Description	Article No.
SINAMICS S210 training case Scope of delivery: • 2 × SINAMICS S210 servo converters, 0.1 kW, 230 V 1 AC • 2 × SIMOTICS S-1FK2 servomotors, High Dynamic • 2 × One Cable Connection (OCC) motor connection cables • Rail, prepared for installation of a controller, e.g. SIMATIC S7-1500 (controller not included in scope of delivery) The SINAMICS S210 training case is supplied as a trolley with a hood.	**6AG1067-1AA33-0AA0**

[1] Extended function for an existing memory card (firmware V5.1 SP1 or higher). The memory card is not included in the scope of delivery. The Safety license can also be ordered together with a memory card (see above). With a CoL in electronic form, the license is supplied as a PDF file. Notification of this with a download link is received by email. For further information, see section Supplementary system components > Memory cards.

[2] The data is applicable for the complete cable length of the motors, whose associated converters are coupled with one another via an AC coupling or through the DC link. The maximum cable length per motor is 25 m using the internal filters or an external filter to achieve EMC category C2. If an external filter is used to achieve EMC category C3, the maximum cable length per motor is 50 m.

[3] Permissible cables:
- 16 mm^2, Class 5 (finely stranded, PVC-insulated) H07V-K + H07V2-K according to EN 50525-2-31
- HELUTHERM 145: 16 mm^2, Class 5 (finely stranded, crosslinked polyolefin-copolymer, halogen-free) www.helukabel.com
- External diameter 6.7 mm to 8.1 mm

Permissible cables (UL approval):
- AWG 6, copper cable with PVC insulation, with or without nylon jacket, 19 strands
- Types: MTW, THHW, THW, THW-2, THHN, THWN-2, TW, TWN
- CSA types: TW, TWU, TWN75, TW75, TWU75, T90, no compressed conductors

[4] The prefix "**GXK:**" is part of a Siemens internal order code that does not belong to the product number of the original manufacturer Michael Koch GmbH.

© Siemens 2022

Order overview

Pre-assembled OCC cables MOTION-CONNECT 500 and 800PLUS

Cross-section	Connector size	For SIMOTICS S motor			MOTION-CONNECT 500 and 800PLUS OCC motor connection and extension cables incl. shield clamp
mm²		1FK2	1FT2	1FS2	Article No.
0.38	M12	1FK2102, 1FK2.03-..G	1FT2102, 1FT2.03-..G	–	**6FX ■ 0 ■ 2-8Q ■ 04-1 ■■■**
0.75	M17	1FK2103-..H, 1FK2203-..K, 1FK2.04, 1FK2.05	1FT2103-..H, 1FT2203-..K, 1FT2.04, 1FT2.05	1FS2104, 1FS2105	**6FX ■ 0 ■ 2-8Q ■ 08-1 ■■■**
1.5	M23	1FK2.06, 1FK2208, 1FK2210	1FT2.06, 1FT2208, 1FT2210	1FS2106, 1FS2208	**6FX ■ 0 ■ 2-8Q ■ 11-1 ■■■**
2.5 [1]	M23	1FK2.06, 1FK2208, 1FK2210	1FT2.06, 1FT2208, 1FT2210	–	**6FX ■ 0 ■ 2-8Q ■ 21-1 ■■■**

Article No. supplement						
Type of cable						
• MOTION-CONNECT 500 – for predominantly fixed routing					**5**	
• MOTION-CONNECT 800PLUS – for use with cable carriers					**8**	
Type of assembly						
• Completely pre-assembled				**0**		
• Connector for the converter side enclosed [2]				**1**		
Type of cable						
• Motor connection cable			**N**			
• Extension cable			**E**			
Length code						
See table "Length code for pre-assembled cables (max. 50 m (164 ft))"	**■■■**					

Pre-assembled OCC cables MOTION-CONNECT 400

Cross-section	Connector size	For SIMOTICS S motor	MOTION-CONNECT 400 *) OCC cables incl. shield clamp
mm²		1FS2	Article No.
0.75	M17	1FS2104, 1FS2105	**6FX40 ■ 2-8QN08-1 ■■■**
1.5	M23	1FS2106, 1FS2208	**6FX40 ■ 2-8QN11-1 ■■■**

Article No. supplement			
Type of assembly			
• Completely pre-assembled		**0**	
• Converter-side Siemens IX signal connector enclosed	**1**		
Length code			
See table "Length code for pre-assembled cables (max. 50 m (164 ft))"	**■■■**		

Length code for pre-assembled cables (max. 50 m (164 ft))

Description	Article No. supplement
MOTION-CONNECT cable	**6FX . 0 . 2-8Q . 0 . -1 ■■■**
0 m (0 ft)	**A**
10 m (32.8 ft)	**B**
20 m (65.6 ft)	**C**
30 m (98.4 ft)	**D**
40 m (131 ft)	**E**
50 m (164 ft)	**F**
0 m (0 ft)	**A**
1 m (3.28 ft)	**B**
2 m (6.56 ft)	**C**
3 m (9.84 ft)	**D**
4 m (13.1 ft)	**E**
5 m (16.4 ft)	**F**
6 m (19.7 ft)	**G**
7 m (23.0 ft)	**H**
8 m (26.2 ft)	**J**
9 m (29.5 ft)	**K**
0 m (0 ft)	**0**
0.1 m (0.33 ft)	**1**
0.2 m (0.66 ft)	**2**
0.3 m (0.98 ft)	**3**
0.4 m (1.31 ft)	**4**
0.5 m (1.64 ft)	**5**
0.6 m (1.97 ft)	**6**
0.7 m (2.30 ft)	**7**
0.8 m (2.62 ft)	**8**

The maximum permissible cable length must be observed.

*) Available soon.

[1] For increased requirement regarding routing type and ambient temperature. See tables on page 4/4.

[2] For the extension cable (10th position of the Article No. "**E**"), special tools for assembling are required. For more information, refer to the installation instructions.

© Siemens 2022

Order overview

OCC components for customer assembly

Description	Cross-section	For SIMOTICS S motor			OCC component
	mm^2	1FK2	1FT2	1FS2	Article No.
Siemens IX signal connector on the converter side	–	–	–	–	**6FX2003-0DE01**
Shield clamp (Packing unit: 10 items)					
• For pre-assembled cables with M12 and M17 plugs	0.38 and 0.75	–	–	–	**6FX2003-7EX10**
• For pre-assembled cables with M23 plugs	1.5 and 2.5	–	–	–	**6FX2003-7EX11**
SPEED-CONNECT plug					
• M12	0.38	1FK2102, 1FK2.03-..G	1FT2102, 1FT2.03-..G	–	**6FX2003-0L■64**
• M17	0.75	1FK2103-..H, 1FK2203-..K, 1FK2.04, 1FK2.05	1FT2103-..H, 1FT2203-..K, 1FT2.04, 1FT2.05	1FS2104, 1FS2105	**6FX2003-0L■54**
• M23	1.5 and 2.5	1FK2.06, 1FK2208, 1FK2210	1FT2.06, 1FT2208, 1FT2210	1FS2106, 1FS2208	**6FX2003-0L■34**

Article No. supplement	
• Motor-side plug	**U**
• Plug with male thread for extension cable	**A**

Sold by the meter OCC cables MOTION-CONNECT

Cross-section	For SIMOTICS S motor		MOTION-CONNECT 500 and 800PLUS sold by the meter OCC cables
mm^2	1FK2	1FT2	Article No.
0.38	1FK2102, 1FK2.03-..G	1FT2102, 1FT2.03-..G	**6FX■008-1BE04-■■A0**
0.75	1FK2103-..H, 1FK2203-..K, 1FK2.04, 1FK2.05	1FT2103-..H, 1FT2203-..K, 1FT2.04, 1FT2.05	**6FX■008-1BE08-■■A0**
1.5	1FK2.06, 1FK2208, 1FK2210	1FT2.06, 1FT2208, 1FT2210	**6FX■008-1BE11-■■A0**
2.5 [1]	1FK2.06, 1FK2208, 1FK2210	1FT2.06, 1FT2208, 1FT2210	**6FX■008-1BE21-■■A0**

Article No. supplement	
Type of cable	
• MOTION-CONNECT 500 for predominantly fixed routing	**5**
• MOTION-CONNECT 800PLUS for use with cable carriers	**8**
Length code	
See table "Length code for cables sold by the meter (max. 500 m (1640 ft))"	**■■**

Cross-section	For SIMOTICS S motor	MOTION-CONNECT 400 *) sold by the meter OCC cables
mm^2	1FS2	Article No.
0.75	1FS2104, 1FS2105	**6FX4008-1BE08-■■A0**
1.5	1FS2106, 1FS2208	**6FX4008-1BE11-■■A0**

Article No. supplement	
Length code	
See table "Length code for cables sold by the meter (max. 500 m (1640 ft))"	**■■**

*) Available soon.

Length code for cables sold by the meter (max. 500 m (1640 ft))

Description	Article No. supplement	
MOTION-CONNECT cable	**6FX . 008-1BE . . -■■A0**	
50 m (164 ft)	**1**	**F**
100 m (328 ft)	**2**	**A**
200 m (656 ft)	**3**	**A**
300 m (984 ft)	**4**	**A**
400 m (1312 ft)	**5**	**A**
500 m (1640 ft)	**6**	**A**

The maximum permissible cable length must be observed.

Control cabinet bushing

Description	Article No.
Mounting flange for cabinet bushing	
• For connector size M12	**6FX2003-7JX00**
• For connector size M17	**6FX2003-7HX00**
• For connector size M23	**6FX2003-7BX00**

Recommended SIMATIC S7 controller

More information about SIMATIC S7-1500 and SIMATIC S7-1500 T-CPU controllers is available in Catalog ST 70 and on the internet at
www.siemens.com/simatic-s7-1500

[1] For increased requirement regarding routing type and ambient temperature. See tables on page 4/4.

© Siemens 2022

Clicking to the Industry Mall

6SL3255-0AA00-5AA0

SINAMICS S210 starter kit

Overview

The SINAMICS S210 starter kit with Extended Safety with Article No. 6SL3200-0AE61-0AA0 comprises

- a SINAMICS S210 servo converter, 230 V 1 AC, 400 W (Article No. 6SL3210-5HB10-4UF0)
- a SIMOTICS S-1FK2 servomotor, High Dynamic, shaft height 30, 400 W, without brake, shaft with feather key, with absolute encoder multiturn (Article No. 1FK2103-4AG00-1MA0)
- a corresponding One Cable Connection cable (OCC), 3 m (9.84 ft) (Article No. 6FX5002-8QN04-1AD0)
- a memory card with firmware V5.2 SP3 and Safety license (Extended Functions) (Article No. 6SL3054-4FC30-2BA0-Z F01)

The delivery quantity is limited to three per customer.

The SINAMICS S210 starter kit can be perfectly combined with the SIMATIC S7-1500 starter kit. In this way, Motion Control applications can be quickly and easily implemented.

For more information on SIMATIC S7-1500 starter kits, see: www.siemens.com/s7-1500-starterkits

Selection and ordering data

Description	Article No.
SINAMICS S210 starter kit with Extended Safety With SINAMICS S210 servo converter, SIMOTICS S-1FK2 servomotor (power rating 400 W), OCC cable (3 m (9.84 ft)) and memory card with Safety license (Extended Functions)	**6SL3200-0AE61-0AA0**

© Siemens 2022

2/2 SINAMICS S210 servo drive
2/2 Overview
2/4 Design
2/5 Function
2/5 Configuration
2/6 Integration
2/8 Selection and ordering data
2/10 Technical specifications
2/13 Dimensional drawings
2/14 Accessories

2/15 Line-side components
2/15 Line filters
2/16 Recommended line-side overcurrent protection devices

2/17 DC link components
2/17 External braking resistors

2/18 Supplementary system components
2/18 Memory cards

Detailed technical information on the SINAMICS S210 servo drive system is available on the internet at www.siemens.com/sinamics-s210/documentation

In addition, the Drive Technology Configurator (DT Configurator) can be used on the internet at the following address: www.siemens.com/sinamics-s210/configuration

© Siemens 2022

Overview

SINAMICS S210 – the single-axis servo drive for highly dynamic applications

SINAMICS S210, 1 AC series, frame sizes FSA to FSC

SINAMICS S210, 3 AC series, frame sizes FSA to FSC

The SINAMICS S210 servo converter is designed for connection to SIMOTICS S-1FK2, S-1FT2 or S-1FS2 synchronous servomotors. PROFINET RT/IRT is available for connection to a higher-level control system. That allows, above all, SIMATIC S7 and SIMOTION to be used as controllers.

SINAMICS S210 is optimized for operation with SIMATIC S7-1500 and SIMATIC S7-1500T, which have their own positioning functionality. Therefore, no additional basic positioner is integrated into the converter.

The converter works with a servo controller with or without Dynamic Servo Control (DSC) and has a torque setpoint limitation. A wide range of internal protection functions are included to protect the converter.

The status of the converter is indicated by two multi-color LEDs and a 7-segment display. Pending faults can be acknowledged with a button under the front cover.

The converter has a web server, which can be called via the service interface or via PROFINET from a web browser on a PC. Both commissioning and diagnostics can be performed through this. With the web server, the converter can be brought into operation in a few steps. As the motor data from the converter is read from the electronic type plate, they do not need to be parameterized. The PROFIdrive telegram is automatically accepted by the controller; so only the controller parameters have to be adjusted. This is simply done with the One Button Tuning function, which automatically determines the parameters.

In addition to easy commissioning directly via the web server of the converter, engineering is also possible with SINAMICS Startdrive and TIA Portal (as of V15.1). The tool for configuration, commissioning and diagnostics has been optimized with regard to user friendliness and the consistent utilization of the TIA Portal advantages of a shared work environment for PLC, HMI and drives (requires SINAMICS S210 firmware V5.2 or higher).

SIMOTICS S-1FK2, S-1FT2 or S-1FS2 servomotors can be connected and operated via a One Cable Connection (OCC) line. Third-party motors cannot be connected because the converter requires the type plate data of the motor.

No additional components are required for controlling the motor holding brake as all the required components are integrated into the converter. In addition, no special power supply is required because the converter optimally sets the voltage for the brake internally. Thus, in combination with the SIMOTICS S-1FK2, S-1FT2 or S-1FS2 servomotors, shortened opening and closing times of the brakes are also possible.

The converter can be operated optionally with a memory card. The card is inserted in the card slot behind the front cover. Firmware and drive parameters can be stored on the memory card, so that the converter can easily be replaced without any other aids. This memory card can also be used to perform series commissioning on multiple drives of identical type.

The card is available as an empty memory card or containing the latest drive firmware version. The memory card also contains the licenses for chargeable functions, such as the safety license for the Extended Safety Functions. To use these functions, a memory card containing the corresponding safety license must be permanently inserted.

If necessary, the converter contains an integrated braking resistor. As a result of the generous dimensioning of the resistor and the DC link capacities, an external braking resistor is only necessary to meet very high requirements. When operating a SINAMICS S210 servo converter with a supply voltage of 200 V to 240 V 3 AC, an external, intrinsically safe braking resistor is always required.

For the 3 AC series, DC link coupling of up to six devices is possible. Thus, the energy that is generated when braking axes can be used for accelerating other axes. This conserves energy and reduces the amount of heat dissipated via the braking resistors.

The converter also features an integrated line filter.
For the 1 AC series, it satisfies category C2 for cable lengths up to 10 m and category C3 for cable lengths up to 25 m. With an optional external line filter, cable lengths of up to 25 m are also possible with category C2 and up to 50 m with category C3. For the 3 AC series, category C3 is achieved for cable lengths up to 25 m. For requirements that go beyond this, an external line filter is required.

© Siemens 2022

Overview

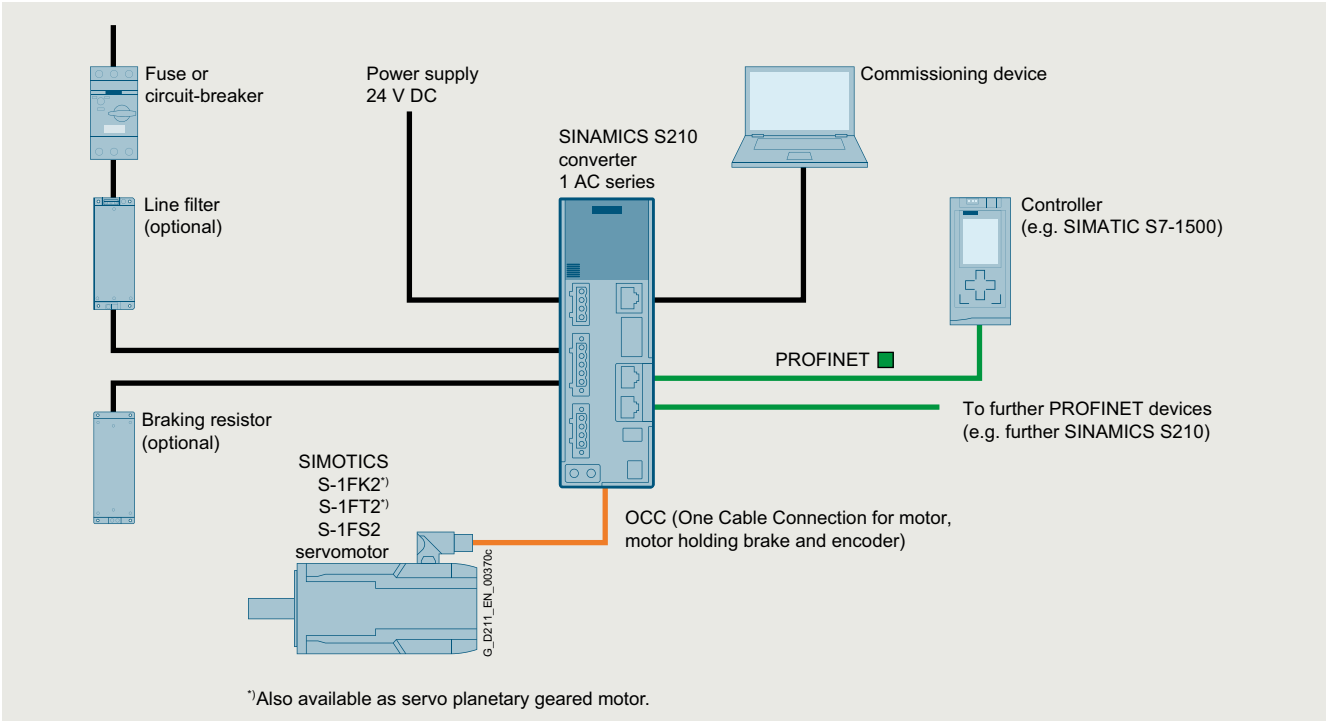

SINAMICS S210 drive system, 1 AC series with optional components

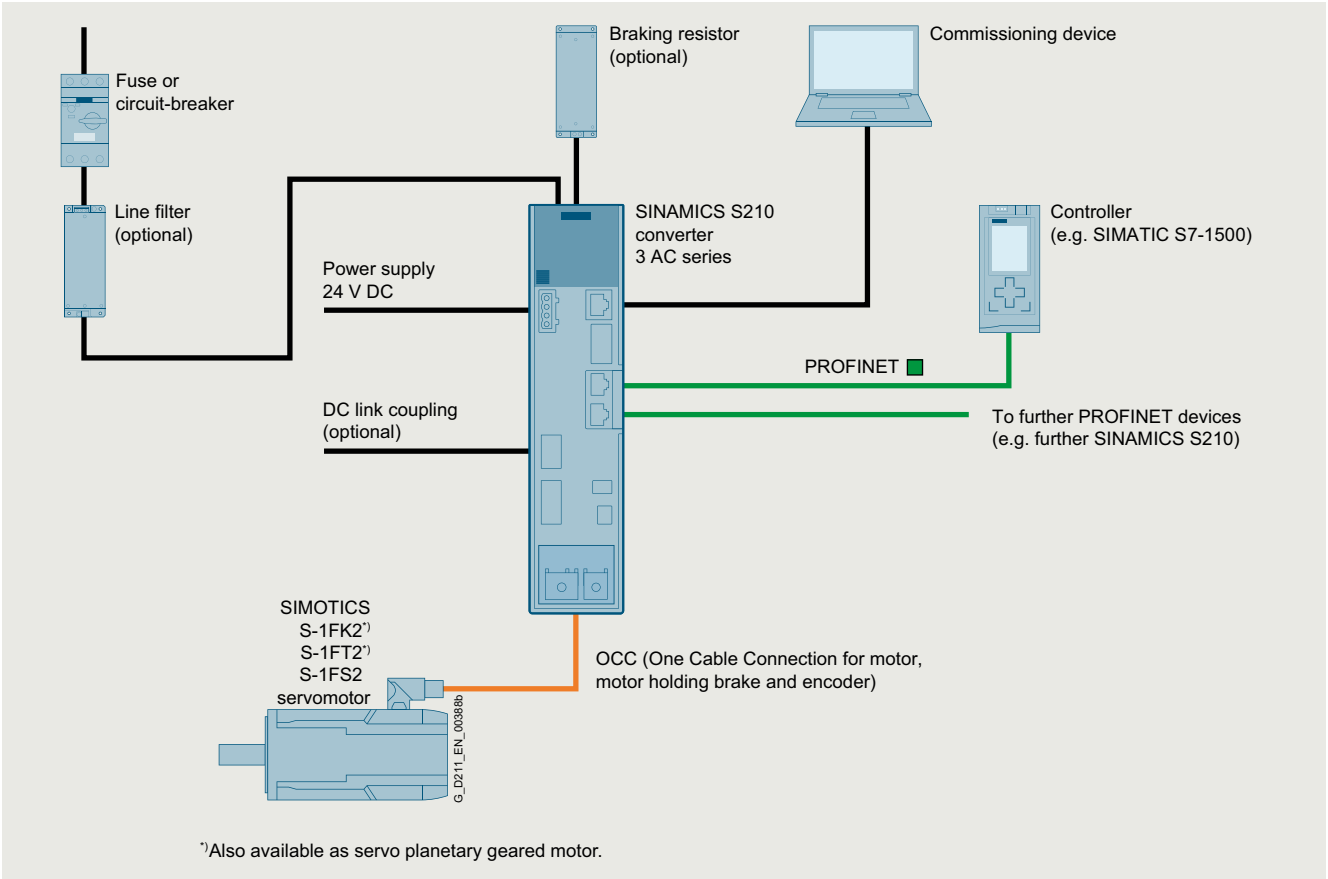

SINAMICS S210 drive system, 3 AC series with optional components

© Siemens 2022

2

Design

The single-axis AC/AC converter contains a power unit and a Control Unit for the powerful communication, open and closed-loop control functions.

The SINAMICS S210 servo converter features the following connections and interfaces as standard:

- Fieldbus interface
  - 1 PROFINET interface with two ports (RJ45 sockets) with PROFIdrive V4 profile
- 1 service interface for Ethernet communications with a service PC
- One Cable Connection (OCC)
  - 1 communications connector for communication with the encoder of the SIMOTICS S-1FK2, S-1FT2 or S-1FS2 motors
  - 1 motor power connector for the power conductors of the SIMOTICS S-1FK2, S-1FT2 or S-1FS2 motors
  - 1 brake connection for the conductors of the motor holding brake of the SIMOTICS S-1FK2, S-1FT2 or S-1FS2 motors
- 1 connection for the electronic power supply via the 24 V DC supply connector (supply can be looped through connectors for several SINAMICS S210)
- 1 connection for the line voltage and an external braking resistor (braking resistor optional, for the 3 AC series via a separate connector). When connecting to 200 V to 240 V 3 AC, an external, intrinsically safe braking resistor is always required.
- 1 connection for the DC link coupling (optional, only for the 3 AC series)
- Digital inputs
  - 1 fail-safe digital input (isolated) for controlling STO and SS1-t via terminals
  - 2 high-speed digital inputs for measuring probe or reference marks
  - 1 digital input for monitoring the temperature of an external braking resistor
- 1 slot for a memory card on which the firmware, parameters and licenses can be stored
- 1 display with 3-digit, 7-segment display for indicating faults and two status LEDs
- 1 button for acknowledging errors

DC link coupling (only 3 AC series)

For devices of the 3 AC series, the DC links of up to six converters can be coupled. Thus, energy balancing between the axes is possible and energy produced during braking can be used by other axes for accelerating. This is not only efficient but also reduces the dissipated heat in the control cabinet, because the energy that is produced no longer has to be converted to heat in the braking resistor. For DC link coupling, the line side must also be coupled (AC bus).

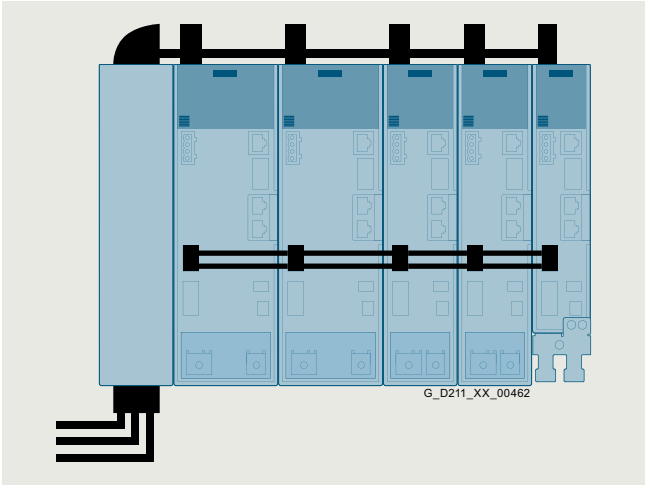

SINAMICS S210, 3 AC series, one line filter plus five servo converters, AC coupling and DC link coupling

© Siemens 2022

Function

Closed-loop control	Servo control with DSC
Control functions	Speed control with encoder
	Dynamic Servo Control (DSC)
	Torque setpoint limitation
	Current controller and current controller adaptation suitably adjusted for SIMOTICS S-1FK2, S-1FT2 or S-1FS2 servomotors
	One Button Tuning with moment of inertia estimator and reference model
	Local measuring probe
	Simple brake control
	Direction reversal without changing the setpoint channel
	Travel to fixed stop
	Vertical axis
	Speed controller adaptation
	Thermal monitoring for power unit and servomotor
	High-performance brake control
Protective functions	Undervoltage DC link voltage
	Overvoltage DC link voltage
	Overcurrent power unit
	Overcurrent motor
	Overload power unit (I^2t)
	Short-circuit
	Ground fault
	Temperature rise servomotor
	Temperature rise power unit
Safety Integrated	Safe Torque OFF (STO)
	Safe Brake Control (SBC)
	Safe Stop 1 time controlled (SS1-t)
	Safe Stop 1 (SS1) [1]
	Safe Stop 2 (SS2) [1]
	Safe Operating Stop (SOS) [1]
	Safely-Limited Speed (SLS) [1]
	Safe Speed Monitor (SSM) [1]
	Safe Direction (SDI) [1]
	Safely-Limited Acceleration (SLA) [1]
	Safe Brake Test (SBT) diagnostic function [1]
Commissioning	Identification of the SIMOTICS S-1FK2, S-1FT2 or S-1FS2 motors via the electronic type plate
	Automatic controller optimization

Configuration

The following electronic configuring aids and engineering tools are available for the SINAMICS S210 servo converters:

SINAMICS SELECTOR app

Frequency converter selection guide for on the move

Siemens has developed the SINAMICS SELECTOR app as a practical tool for finding article numbers for your SINAMICS converter in the power range from 0.1 kW to 630 kW quickly and easily. Whether for SINAMICS V20, SINAMICS G120C, SINAMICS G120P, SINAMICS G120X, SINAMICS G120 or SINAMICS S210: The app will provide you with the correct article numbers conveniently.

How does it work? Simply select your application, the frequency converter you require, the rated power and device options as well as the necessary accessories.

Then you can save your selection and send it by email. The preselection serves as the basis for an order specification with the dealer/Siemens.

You will find free downloads for Android and iOS here:
www.siemens.com/sinamics-selector

Drive Technology Configurator (DT Configurator)

The Drive Technology Configurator (DT Configurator) helps you to configure the optimum drive technology products for a number of applications – starting with gearboxes, motors, converters as well as the associated options and components and ending with controllers, software licenses and connection systems.

The DT Configurator can be used on the internet without requiring any installation. The DT Configurator can be found in the Siemens Industry Mall at the following address:
www.siemens.com/dt-configurator

Drive dimensioning of the SINAMICS S210 servo drive system with the TIA Selection Tool

The SINAMICS S210 servo drive system is easily configured with the TIA Selection Tool under the Drive Dimensioning plug-in. It provides support when selecting the hardware and firmware components necessary to implement a drive task. The plug-in encompasses the configuration of the entire drive system and allows the handling of individual drives.

- Intuitive user interface, menu-based operation and help
- Configuration of the SINAMICS S210 servo drive system
- Adjustable traversing cycles and various mechanical systems integrated for single-axis applications
- Interface to the TIA Portal and Industry Mall

The TIA Selection Tool is available for free on the internet at
www.siemens.com/tia-selection-tool-standalone

SINAMICS web server for SINAMICS S210

The converter can be brought easily and quickly into operation and optimized with the web server. Additional software does not need to be installed as access comes directly from a web browser.

You can find further information about the web server for SINAMICS S210 in the Engineering tools section.

SINAMICS Startdrive commissioning tool (TIA Portal)

SINAMICS Startdrive is a tool for configuring, commissioning and diagnosing the SINAMICS converter family that is integrated into TIA Portal (V15.1 or higher).

The SINAMICS Startdrive has been optimized with regard to user friendliness and consistent use of the TIA Portal benefits of a common working environment for PLC, HMI and drives. SINAMICS firmware V5.2 or higher is required for SINAMICS S210.

The SINAMICS Startdrive Advanced license is required for the Safety Integrated acceptance test.

The SINAMICS Startdrive commissioning tool is available free on the internet at
www.siemens.com/startdrive

You can find further information on the SINAMICS Startdrive commissioning tool in the section Engineering tools.

[1] Available in firmware V5.1 SP1 and higher. The Extended Functions require a Safety license.

© Siemens 2022

2

Integration

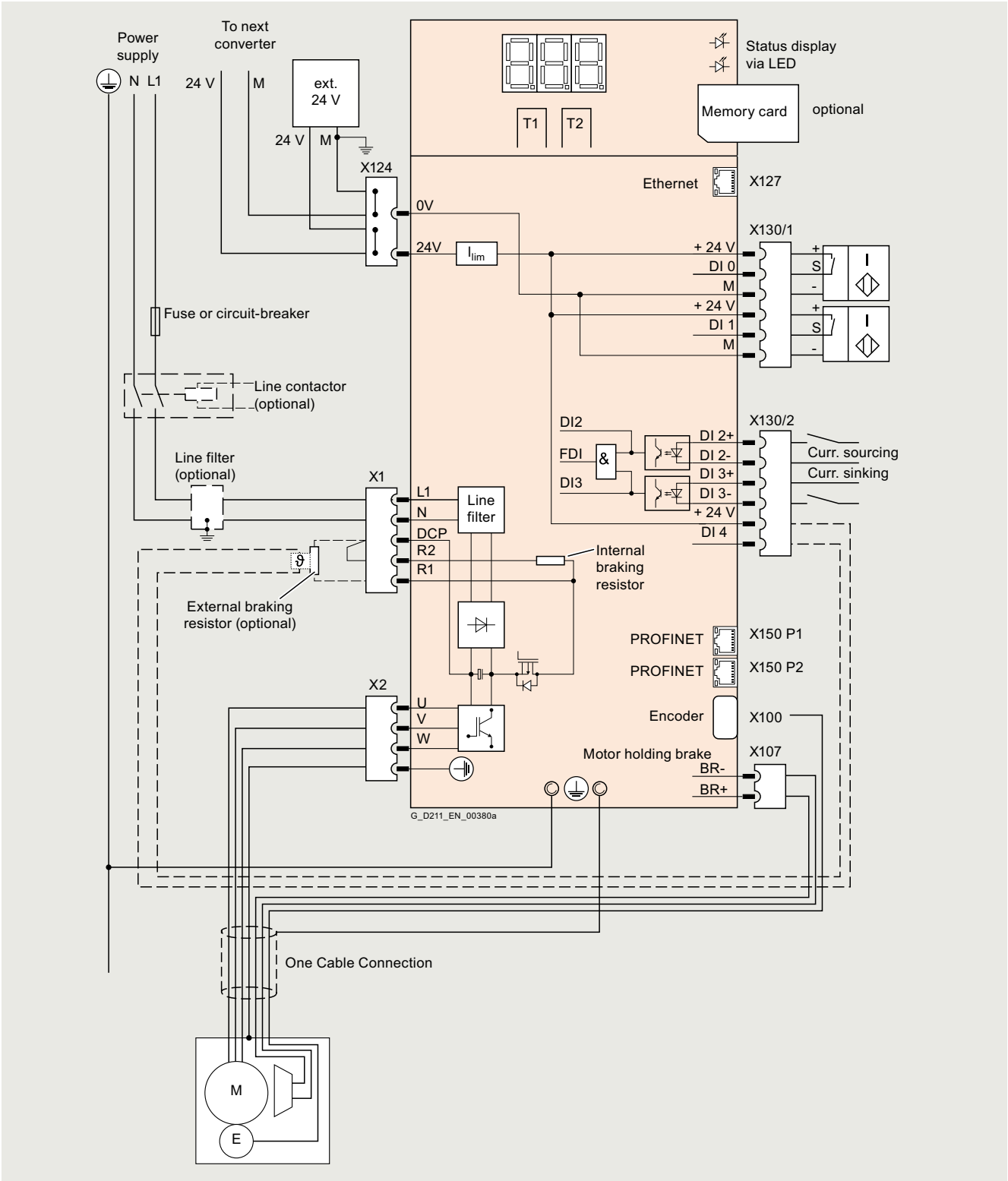

Connection example SINAMICS S210 servo converter, 1 AC series

© Siemens 2022

Integration

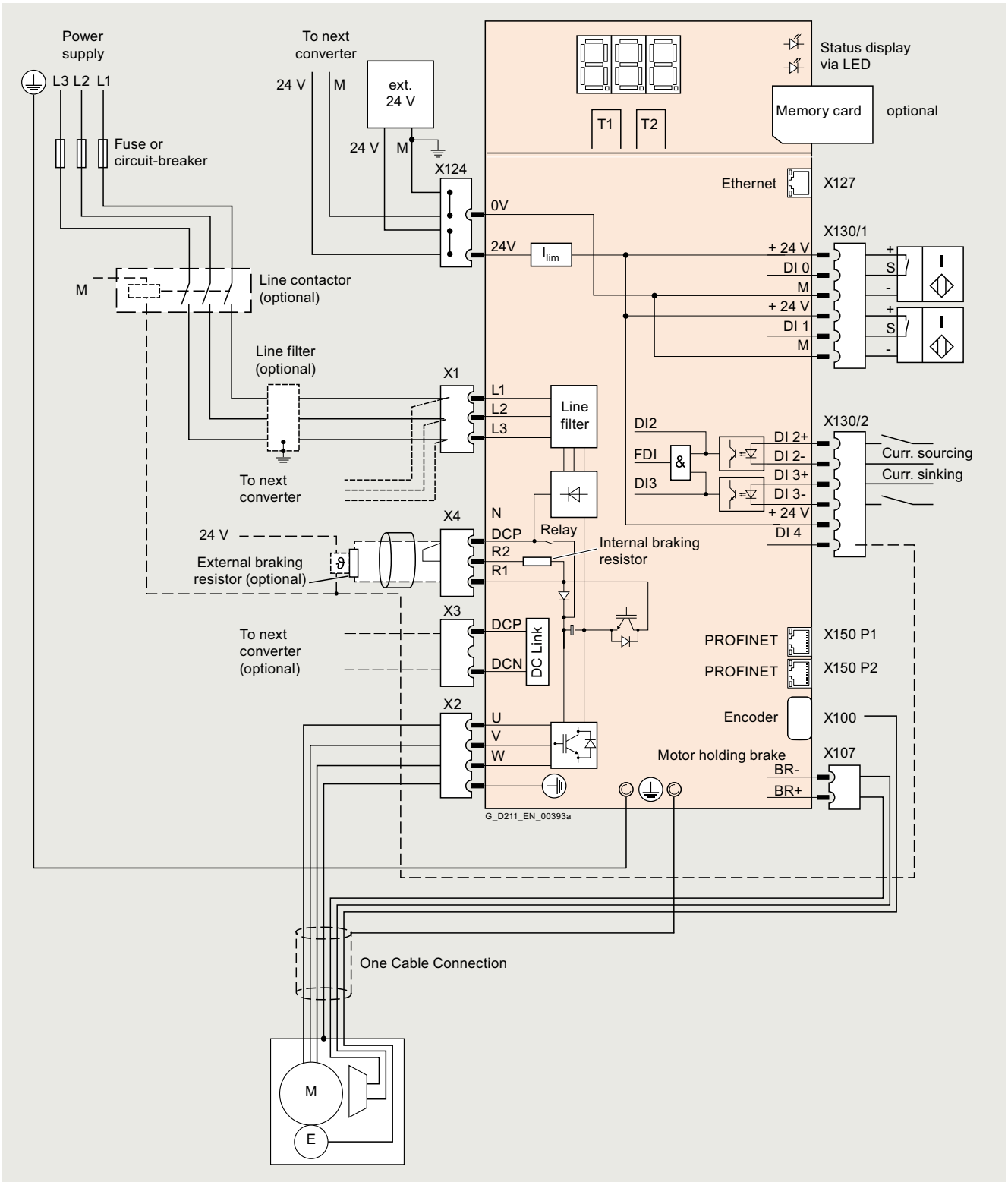

Connection example SINAMICS S210 servo converter, 3 AC series

© Siemens 2022

2

Selection and ordering data

Description	Frame size	Article No.
200 ... 240 V 1 AC		
SINAMICS S210 servo converters with shield plate and push-in connectors without memory card The shield clamp is included in the scope of delivery of the MOTION-CONNECT cable.		
• 0.1 kW	FSA	**6SL3210-5HB10-1UF0**
• 0.2 kW	FSA	**6SL3210-5HB10-2UF0**
• 0.4 kW	FSB	**6SL3210-5HB10-4UF0**
• 0.75 kW	FSC	**6SL3210-5HB10-8UF0**

Description	Frame size	Article No.
200 ... 480 V 3 AC		
SINAMICS S210 servo converters with shield plate (for FSA only) and push-in connectors without memory card The shield clamp is included in the scope of delivery of the MOTION-CONNECT cable.		
• 0.4 kW	FSA	**6SL3210-5HE10-4UF0**
• 0.75 kW	FSA	**6SL3210-5HE10-8UF0**
• 1 kW	FSA	**6SL3210-5HE11-0UF0**
• 1.5 kW	FSB	**6SL3210-5HE11-5UF0**
• 2 kW	FSB	**6SL3210-5HE12-0UF0**
• 3.5 kW	FSC	**6SL3210-5HE13-5UF0**
• 5 kW	FSC	**6SL3210-5HE15-0UF0**
• 7 kW	FSC	**6SL3210-5HE17-0UF0**

When operating a SINAMICS S210 servo converter with a supply voltage of 200 V to 240 V 3 AC, an external, intrinsically safe braking resistor is always required.

© Siemens 2022

Selection and ordering data

Accessories

Description	Article No.
SINAMICS SD card (optional) 512 MB The parameter assignment, firmware and licenses for a converter can be stored on this memory card. Firmware V5.2 or higher is required for the 3 AC series. • Empty • With firmware V5.1 • With firmware V5.1 SP1 • With firmware V5.1 SP1 and Safety license (Extended Functions) • With firmware V5.2 • With firmware V5.2 and Safety license (Extended Functions) • With firmware V5.2 SP3 • With firmware V5.2 SP3 and Safety license (Extended Functions)	 **6SL3054-4AG00-2AA0** **6SL3054-4FB00-2BA0** **6SL3054-4FB10-2BA0** **6SL3054-4FB10-2BA0-Z F01** **6SL3054-4FC00-2BA0** **6SL3054-4FC00-2BA0-Z F01** **6SL3054-4FC30-2BA0** **6SL3054-4FC30-2BA0-Z F01**
Safety license (Extended Functions) [1] • CoL in paper form • CoL in electronic form	 **6SL3074-0AA10-0AA0** **6SL3074-0AA10-0AH0**
PROFINET patch cable For the networking of concatenated converters Industrial Ethernet TP cord, CAT 6 A, twisted pair line 4 × 2 cores, pre-assembled with two RJ45 connectors • 0.3 m (0.98 ft) • 0.5 m (1.64 ft)	 **6XV1870-3QE30** **6XV1870-3QE50**
Only for the 1 AC series	
Line filter With this line filter, Category C2 for cable lengths up to 25 m (82 ft), Category C3 for cable lengths up to 50 m (164 ft) acc. to EN 61800-3 can be achieved. • ≤ 18 A	 **6SL3203-0BB21-8VA1**
Replacement connector set For frame sizes FSA, FSB and FSC With a connector set, as in the scope of delivery, and two shield plates	**6SL3260-2DB00-0AA0**

Description	Article No.
Only for the 3 AC series	
Line filter With these line filters, Category C2 for cable lengths up to 25 m (82 ft), Category C3 for cable lengths up to 50 m (164 ft) acc. to IEC 61800-3 can be achieved. When connected via a DC link, a total cable length of up to 100 m (328 ft) with Category C2 and up to 250 m (820 ft) with Category C3 is possible [2] • ≤ 35 A • ≤ 65 A	 **6SL3203-0BE23-5HA0** **6SL3203-0BE26-5HA0**
Connector set AC bus and DC link For coupling the DC link and the line infeed Scope of delivery: 1 AC bus connector, 1 DC link connector, 2 cover caps The AC bus connector replaces the push-in connector included in the scope of delivery of the converter. Wiring is performed with conventional 16 mm² cable (not included in scope of delivery) [3]	**6SL3260-2DC00-0AA0**
Connector set AC bus individual For coupling the line infeed Scope of delivery: 1 AC bus connector, 1 cover cap This connector replaces the push-in connector included in the scope of delivery of the converter. Wiring is performed with conventional 16 mm² cable (not included in scope of delivery) [3]	**6SL3260-2DC10-0AA0**
External braking resistors for 200 … 240 V 3 AC For a supply voltage of 200 V to 240 V 3 AC, an external, intrinsically safe braking resistor is always required for each converter • 100 W, 47 Ω for FSA and FSB • 240 W, 14 Ω for FSC	 **GXK:BWG250047TS-190** **GXK:BWG600014TS-190**
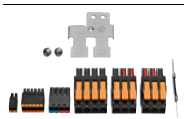 **Replacement connector set** For frame sizes FSA, FSB and FSC With a connector set, as in the scope of delivery, and one shield plate (for FSA)	**6SL3260-2DB10-0AA0**
Replacement fan Incl. support • Frame size FSA • Frame size FSB • Frame size FSC	 **6SL3260-0AA00-0AA0** **6SL3260-0AB00-0AA0** **6SL3260-0AC00-0AA0**

[1] Extended function for an existing memory card (firmware V5.1 SP1 or higher). The memory card is not included in the scope of delivery. The Safety license can also be ordered together with a memory card (see above). With a CoL in electronic form, the license is supplied as a PDF file. Notification of this with a download link is received by email. For further information, see section Supplementary system components > Memory cards.

[2] The data is applicable for the complete cable length of the motors, whose associated converters are coupled with one another via an AC coupling or through the DC link.
The maximum cable length per motor is 25 m using the internal filters or an external filter to achieve EMC category C2. If an external filter is used to achieve EMC category C3, the maximum cable length per motor is 50 m.

[3] Permissible cables:
- 16 mm², Class 5 (finely stranded, PVC-insulated) H07V-K + H07V2-K according to EN 50525-2-31
- HELUTHERM 145: 16 mm², Class 5 (finely stranded, crosslinked polyolefin-copolymer, halogen-free) www.helukabel.com
- External diameter 6.7 mm to 8.1 mm

Permissible cables (UL approval):
- AWG 6, copper cable with PVC insulation, with or without nylon jacket, 19 strands
- Types: MTW, THHW, THW, THW-2, THHN, THWN-2, TW, TWN
- CSA types: TW, TWU, TWN75, TW75, TWU75, T90, no compressed conductors

© Siemens 2022

2

Technical specifications

Unless explicitly specified otherwise, the following technical specifications are valid for all SINAMICS S210 servo converters.

General technical specifications	
Mechanical specifications	
Vibratory load	
• Transport [1] acc. to IEC 60721-3-2: 1997	Class 2M3
• Operation acc. to IEC 60721-3-3: 2002	Class 3M2
- Test values according to IEC/EN 60068-2-6	Test Fc (sinusoidal) • 2 ... 9 Hz: 1.5 mm deflection amplitude • 9 ... 200 Hz: 0.5 × *g* acceleration amplitude • 10 frequency cycles per axis
Shock load	
• Transport [1] acc. to IEC 60721-3-2: 1997	Class 2M3
• Operation acc. to IEC 60721-3-3: 2002	Class 3M2
- Test values according to IEC/EN 60068-2-27	Test Ea (semisinusoidal) • 5 × *g* peak acceleration • 30 ms duration • 3 shocks in all three axes in both directions
Environmental conditions	
Protection class According to IEC/EN 61800-5-1	Class I (with protective bonding circuit) and class III (PELV or SELV)
Degree of protection According to IEC/EN 60529	IP20 Mounting in control cabinet necessary
Permissible ambient temperature (air) in operation	0 ... 50 °C (32 ... 122 °F)
Installation altitude	Up to max. 4000 m (13123 ft) (IEC/EN/UL), up to max. 2000 m (6562 ft) (CSA) • Up to 1000 m (3281 ft) above sea level without derating • As from 1000 m (3281 ft) derating 10 % of current or 5 K per 1000 m (3281 ft) • For 1 AC devices, an isolating transformer is required from 2000 m (6562 ft)
Climatic environmental conditions	
• Storage [2] acc. to IEC 60721-3-1: 1997	Class 1K4 -25 ... +55 °C (-13 ... +131 °F)
• Transport [1] acc. to IEC 60721-3-2: 1997	Class 2K4 -40 ... +70 °C (-40 ... +158 °F) Max. air humidity: 95 % at 40 °C (104 °F)
• Operation acc. to IEC 60721-3-3: 2002	Better than class 3K3 0 ... 50 °C (32 ... 122 °F) Relative air humidity: 5 ... 95 % Condensation, splashwater, and ice formation not permitted (IEC/EN 60204, Part 1)
Environmental class/harmful chemical substances	
• Storage [2] acc. to IEC 60721-3-1: 1997	Class 1C2
• Transport [1] acc. to IEC 60721-3-2: 1997	Class 2C2
• Operation acc. to IEC 60721-3-3: 2002	Class 3C2
Organic/biological influences	
• Storage [2] acc. to IEC 60721-3-1: 1997	Class 1B2
• Transport [1] acc. to IEC 60721-3-2: 1997	Class 2B2
• Operation acc. to IEC 60721-3-3: 2002	Class 3B2
Degree of pollution According to IEC/EN 61800-5-1	2
Standards	
Certificates of suitability	CE, UKCA, cULus (UL File No. E355661 for 1 AC series, E192450 for 3 AC series), RCM, EAC, KC
Functional safety	• SIL 2 according to IEC 61508 parts 1 to 3 (2010) and IEC 61800-5-2 (2016) • PL d according to ISO 13849 part 1 (2015) • Category 3 according to ISO 13849 part 1 (2015)

[1] In transport packaging.
[2] In product packaging.

© Siemens 2022

Technical specifications

Line voltage 200 ... 240 V 1 AC		SINAMICS S210 servo converters, 1 AC series			
		6SL3210-5HB10-1UF0	6SL3210-5HB10-2UF0	6SL3210-5HB10-4UF0	6SL3210-5HB10-8UF0
Line supply connection					
• Supply voltage		200 ... 240 V 1 AC ±10 %			
• Line frequency	Hz	50/60			
• Conductor cross-section, max.	mm^2	2.5			
• Line system configuration		Grounded TN/TT networks and ungrounded IT networks			
Rated current	A	1.4	2.7	5	9.3
Inrush current	A	8	8	8	8
Power loss	W	15.7	23.2	38.5	71.1
Electronic power supply					
• Voltage		24 V -15 % ... +20 %			
• Power requirement, max.	A	0.8 without brake For current consumption of the brake, see section SIMOTICS S-1FK2 servomotors > Technical specifications > Holding brake, page 3.1/10			
• Conductor cross-section, max.	mm^2	2.5			
Output					
• Rated power 230 V	kW	0.1	0.2	0.4	0.75
• Rated current	A	0.8	1.4	2.4	4.4
• Output current, max.	A	3.1	4.8	8.7	16
Pulse frequency power unit	kHz	8			
Output frequency	Hz	0 ... 550			
Line filter		Integrated, category C2 (up to 10 m (32.8 ft) cable length), category C3 (up to 25 m (82.0 ft) cable length)			
Braking resistor		Without [1]	Integrated	Integrated	Integrated
Digital inputs [2]					
• Fast inputs for measuring probes, reference marks, temperature monitoring, external braking resistor		3			
- Low level		-30 V ... +5 V and ≤ 2 mA			
- High level		15 V ... 30 V			
- Current consumption	mA	6			
- Delay time, typ., L → H	µs	5			
- Delay time, typ., H → L	µs	50			
- Galvanic isolation		No			
• Fail-safe input		1			
- Low level		-30 V ... +5 V and ≤ 2 mA			
- High level		15 V ... 30 V			
- Current consumption	mA	5			
- Delay time, typ., L → H	µs	50			
- Delay time, typ., H → L	µs	100			
- Galvanic isolation		Yes			
• Conductor cross-section, max.	mm^2	1.5			
Cooling		Convection (without fan)			
Frame size		FSA		FSB	FSC
Dimensions					
• Width	mm (in)	45 (1.77)		55 (2.17)	74.5 (2.93)
• Height	mm (in)	170 (6.69)		170 (6.69)	170 (6.69)
• Depth	mm (in)	170 (6.69)		170 (6.69)	195 (7.68)
Weight, approx.	kg (lb)	1.1 (2.43)		1.2 (2.65)	1.9 (4.19)

[1] An internal braking resistor is not required for normal operation on account of the available DC link capacity.

[2] The specified delay times refer to the hardware. The actual reaction time depends on the time slot in which the digital input is processed.

© Siemens 2022

Technical specifications

Line voltage 200 ... 480 V 3 AC		SINAMICS S210 servo converters, 3 AC series							
		6SL3210-5HE10-4UF0	6SL3210-5HE10-8UF0	6SL3210-5HE11-0UF0	6SL3210-5HE11-5UF0	6SL3210-5HE12-0UF0	6SL3210-5HE13-5UF0	6SL3210-5HE15-0UF0	6SL3210-5HE17-0UF0
Line supply connection									
• Supply voltage		200 ... 480 V 3 AC ±10 %							
• Line frequency	Hz	50/60							
• Conductor cross-section, max.	mm^2	6							
• Line system configuration		Grounded TN/TT networks, ungrounded IT networks and networks with grounded line conductor only with an isolating transformer							
Rated current	A	1.6	2.8	3.8	6	7.5	12.5	15	17.9
Inrush current	A	4.3	4.3	4.3	8.6	8.6	27.8	27.8	27.8
Power loss	W	69	81	94	114	131	167	191	204
Electronic power supply									
• Voltage		24 V -15 % ... +20 %							
• Power requirement, max.	A	1.2 without brake For current consumption of the brake, see section SIMOTICS S-1FK2 servomotors > Technical specifications > Holding brake, page 3.1/10							
• Conductor cross-section, max.	mm^2	2.5							
Output									
• Rated power									
- 400 V	kW	0.4	0.75	1	1.5	2	3.5	5	7
- 240 V	kW	0.24	0.45	0.6	0.9	1.2	2.1	3	4.2
• Rated current	A	1.2	2.3	3	5	7	9	12	15
• Output current, max.	A	4.2	7.6	10.9	19	24	33	44	55
Pulse frequency power unit	kHz	8							
Output frequency	Hz	0 ... 550							
Line filter		Category C3 (up to 25 m (82.0 ft) cable length for a single axis, for DC link coupling see Accessories/line filters)							
Braking resistor		Integrated, when connecting to 200 V ... 240 V 3 AC, an external, intrinsically safe braking resistor is always required.							
Digital inputs [1]									
• Fast inputs for measuring probes, reference marks, temperature monitoring, external braking resistor		3							
- Low level		-30 V ... +5 V and ≤ 2 mA							
- High level		15 V ... 30 V							
- Current consumption	mA	6							
- Delay time, typ., L → H	µs	5							
- Delay time, typ., H → L	µs	50							
- Galvanic isolation		No							
• Fail-safe input		1							
- Low level		-30 V ... +5 V and ≤ 2 mA							
- High level		15 V ... 30 V							
- Current consumption	mA	5							
- Delay time, typ., L → H	µs	50							
- Delay time, typ., H → L	µs	100							
- Galvanic isolation		Yes							
• Conductor cross-section, max.	mm^2	1.5							
Cooling		Air cooling with integrated fan							
Frame size		FSA			FSB		FSC		
Dimensions									
• Width	mm (in)	50 (1.97)			70 (2.76)		105 (4.13)		
• Height	mm (in)	231 (9.09)			280 (11.0)		280 (11.0)		
• Depth	mm (in)	223 (8.78)			223 (8.78)		223 (8.78)		
Weight, approx.	kg (lb)	2.1 (4.63)			3.3 (7.28)		5 (11.03)		

[1] The specified delay times refer to the hardware. The actual reaction time depends on the time slot in which the digital input is processed.

© Siemens 2022

Dimensional drawings

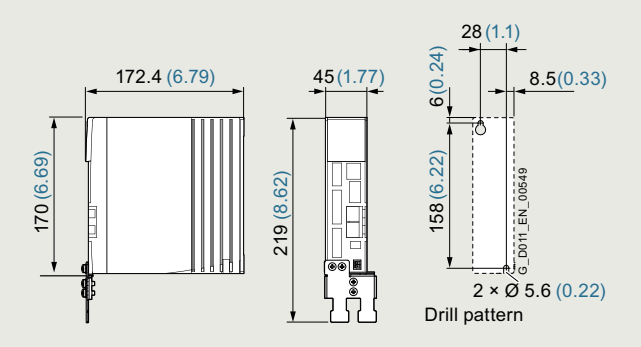

Dimensional drawing SINAMICS S210, frame size FSA, 1 AC series

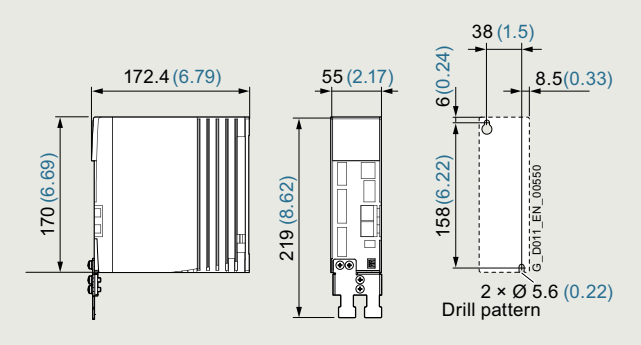

Dimensional drawing SINAMICS S210, frame size FSB, 1 AC series

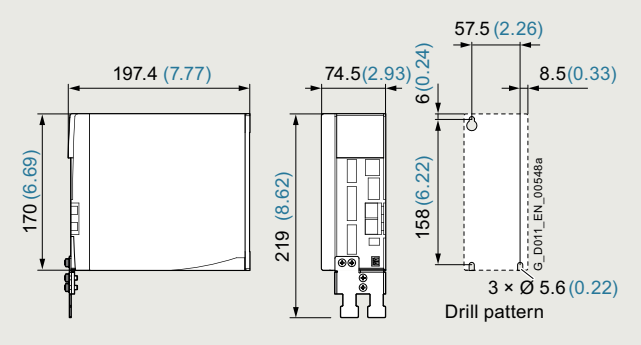

Dimensional drawing SINAMICS S210, frame size FSC, 1 AC series

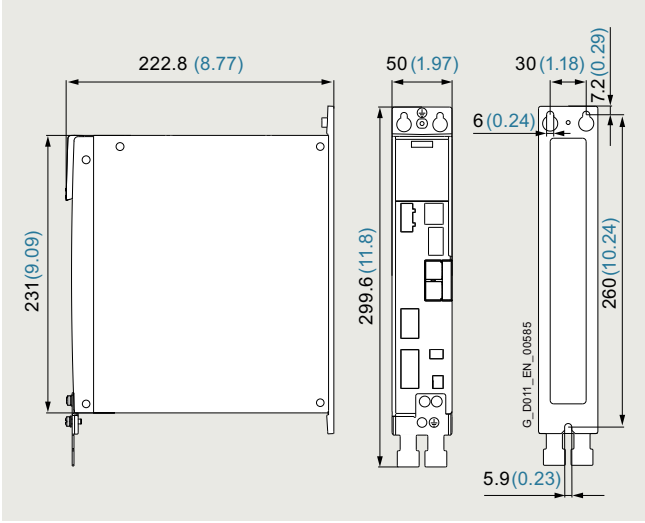

Dimensional drawing SINAMICS S210, frame size FSA, 3 AC series

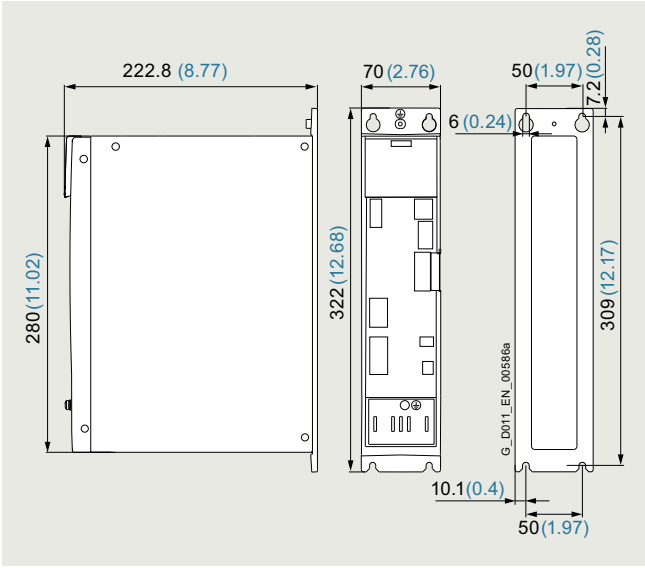

Dimensional drawing SINAMICS S210, frame size FSB, 3 AC series

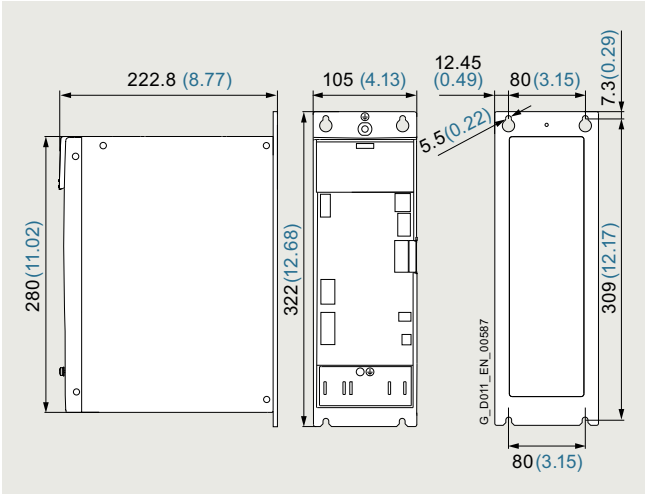

Dimensional drawing SINAMICS S210, frame size FSC, 3 AC series

All dimensions in mm (values in brackets are in inches).

With the OCC motor connection cable connected, the overall depth increases by 57 mm (2.24 inches).

© Siemens 2022

2

Accessories

Line filters

1 AC series

Filters are already integrated in order to achieve category C2 (for motor cable lengths up to 10 m) or category C3 (for motor cable lengths up to 25 m). Further requirements can be achieved using an external line filter.

1 AC series	Maximum motor cable length	
	for converters without additional line filter	for converters with external line filter
EMC category C2	10 m (32.8 ft)	25 m (82.0 ft)
EMC category C3	25 m (82.0 ft)	50 m (164 ft)

3 AC series

Filters for achieving category C3 are already integrated (for motor cable lengths up to 25 m). Further requirements can be achieved using an external line filter.

3 AC series	Line/DC link coupling	Maximum motor cable length	
		for converters with integrated line filter	for converters with external line filter
EMC category C2	Without line/DC link coupling	–	25 m (82 ft)
	With line/DC link coupling ≤ 6 converters [1]	–	100 m (328 ft)
EMC category C3	Without line/DC link coupling	25 m (82 ft)	50 m (164 ft)
	With line/DC link coupling ≤ 6 converters [1]	100 m (328 ft)	250 m (820 ft)

Example: SINAMICS S210, 3 AC line filter with servo converter, frame size FSB

Recommended line-side overcurrent protection devices

Overcurrent protection devices are absolutely necessary for the operation of the converters. The table listed in the section "Recommended line-side overcurrent protection devices" provides recommendations according to IEC and UL regulations, depending on the area of application. Recommendations on further overcurrent protection devices are available at: https://support.industry.siemens.com/cs/document/109748999

Additional information about the listed Siemens fuses is available in Catalog LV 10 as well as in the Industry Mall.

Braking resistors

As far as necessary, braking resistors are integrated into the converters. Together with the generously dimensioned DC link capacities, an external braking resistor is not necessary in the normal case.

If the internal braking resistor is inadequate for applications with very high requirements, an external braking resistor can be connected as an alternative. When operating a SINAMICS S210 servo converter with a supply voltage of 200 V to 240 V 3 AC, an external, intrinsically safe braking resistor is always required.

Memory cards

A memory card (SINAMICS SD card) can be optionally used with SINAMICS S210. The associated slot is located under the front cover of the converter. Not only the firmware but also the device parameterization of a SINAMICS S210 servo converter can be stored on the memory card.

When service is required, e.g. after the converter has been replaced and the data have been downloaded from the memory card, the drive system is immediately ready for use again.

A memory card is only absolutely necessary if functions requiring license, such as the Extended Safety Functions, are used. The necessary license is saved on the memory card.

[1] The data is applicable for the complete cable length of the motors, whose associated converters are coupled with one another via an AC coupling or through the DC link.
The maximum cable length per motor is 25 m using the internal filters or an external filter to achieve EMC category C2. If an external filter is used to achieve EMC category C3, the maximum cable length per motor is 50 m.

© Siemens 2022

Overview

1 AC line filter, 18 A

3 AC line filter, 35 A and 65 A

The 3 AC line filters are connected via the AC coupling of the converters.
The total of the rated currents of the converters on an AC bus must not exceed the rated current of the line filter.

Selection and ordering data

Rated current of the servo converter A	Suitable for SINAMICS S210		Line filter Article No.
Line voltage 200 ... 240 V 1 AC			
1.4	6SL3210-5HB10-1UF0		
2.7	6SL3210-5HB10-2UF0		
5	6SL3210-5HB10-4UF0		
9.3	6SL3210-5HB10-8UF0		
• Total of the currents ≤ 18 A			**6SL3203-0BB21-8VA1**
Line voltage 200 ... 480 V 3 AC			
1.6	6SL3210-5HE10-4UF0		
2.8	6SL3210-5HE10-8UF0		
3.8	6SL3210-5HE11-0UF0		
6	6SL3210-5HE11-5UF0		
7.5	6SL3210-5HE12-0UF0		
12.5	6SL3210-5HE13-5UF0		
15	6SL3210-5HE15-0UF0		
17.9	6SL3210-5HE17-0UF0		
• Total of the currents ≤ 35 A			**6SL3203-0BE23-5HA0**
• Total of the currents ≤ 65 A			**6SL3203-0BE26-5HA0**

Technical specifications

Line voltage 200 ... 240 V 1 AC		**Line filter** 6SL3203-0BB21-8VA1
Rated current	A	18
Power loss	W	< 1.2
Line/load connection		Screw terminals
• Conductor cross-section		
- For single-conductor connection	mm^2	0.25 ... 6 AWG 24 ... 10
- For flexible cables	mm^2	0.25 ... 4 AWG 24 ... 12
PE connection		M5 screw stud
Degree of protection		IP20
Dimensions		
• Width	mm (in)	62 (2.44)
• Height	mm (in)	155 (6.10)
• Depth	mm (in)	53 (2.09)
Weight, approx.	kg (lb)	0.7 (1.54)
Suitable for SINAMICS S210 servo converter	Type	6SL3210-5HB10-1UF0 (1.4 A) 6SL3210-5HB10-2UF0 (2.7 A) 6SL3210-5HB10-4UF0 (5 A) 6SL3210-5HB10-8UF0 (9.3 A)

Line voltage 200 ... 480 V 3 AC		**Line filter**	
		6SL3203-0BE23-5HA0	6SL3203-0BE26-5HA0
Rated current	A	35	65
Power loss	W	12	18
Line supply connection		Screw terminals	Screw terminals
• Conductor cross-section	mm^2	0.5 ... 10 AWG 24 ... 6	4 ... 25 AWG 10 ... 3
Load connection		Screw terminals	Screw terminals
• Conductor cross-section	mm^2	16 AWG 6	16 AWG 6
PE connection		M4 screw stud	M5 screw stud
Degree of protection		IP20	IP20
Dimensions			
• Width	mm (in)	50 (1.97)	70 (2.76)
• Height	mm (in)	296.2 (11.66)	348.8 (13.73)
• Depth	mm (in)	220 (8.66)	220 (8.66)
Weight, approx.	kg (lb)	2.3 (5.07)	3.5 (7.72)
Suitable for SINAMICS S210 servo converter	Type	6SL3210-5HE10-4UF0 (1.6 A) 6SL3210-5HE10-8UF0 (2.8 A) 6SL3210-5HE11-0UF0 (3.8 A) 6SL3210-5HE11-5UF0 (6 A) 6SL3210-5HE12-0UF0 (7.5 A) 6SL3210-5HE13-5UF0 (12.5 A) 6SL3210-5HE15-0UF0 (15 A) 6SL3210-5HE17-0UF0 (17.9 A)	

© Siemens 2022

2

Selection and ordering data

Overcurrent protection devices are absolutely necessary for the operation of the converters. The following table lists recommendations for fuses.

- Siemens fuses of type 3NA3 for use in the area of validity of IEC
- UL-listed fuses Class J for use in USA and Canada

Recommendations on further overcurrent protection devices are available at:
https://support.industry.siemens.com/cs/document/109748999

The Short Circuit Current Rating (SCCR) according to UL for industrial control cabinet installations to NEC Article 409 or UL 508A/508C or UL 61800-5-1 is as follows for Class J fuses for

- SINAMICS S210: 65 kA

SCCR and ICC values for combination with further overcurrent protection devices are available at:
https://support.industry.siemens.com/cs/document/109748999

Notes for installations in Canada:

The converters are intended for line supply systems with overvoltage category III.
More information is available in the technical documentation on the internet at:
www.siemens.com/sinamics-s210/documentation

Additional information about the listed Siemens fuses is available in Catalog LV 10 as well as in the Industry Mall.

Rated power	SINAMICS S210	**IEC-compliant**		**UL/cUL-compliant**	
		Fuse		**Fuse type** Rated voltage 600 V AC	
		Current	**3NA3**		Current
kW	Type	A	Article No.	Class	A
Line voltage 200 ... 240 V 1 AC					
0.1	6SL3210-5HB10-1UF0	6	**3NA3801**	J	6
0.2	6SL3210-5HB10-2UF0	6	**3NA3801**	J	6
0.4	6SL3210-5HB10-4UF0	10	**3NA3803**	J	10
0.75	6SL3210-5HB10-8UF0	16	**3NA3805**	J	20
Line voltage 200 ... 480 V 3 AC					
0.4	6SL3210-5HE10-4UF0	16	**3NA3805**	J	15
0.75	6SL3210-5HE10-8UF0	16	**3NA3805**	J	15
1	6SL3210-5HE11-0UF0	16	**3NA3805**	J	15
1.5	6SL3210-5HE11-5UF0	32	**3NA3812**	J	30
2	6SL3210-5HE12-0UF0	32	**3NA3812**	J	30
3.5	6SL3210-5HE13-5UF0	63	**3NA3822**	J	70
5	6SL3210-5HE15-0UF0	63	**3NA3822**	J	70
7	6SL3210-5HE17-0UF0	63	**3NA3822**	J	70

Group protection of multiple converters

Further information is available in the technical documentation on the internet at:
www.siemens.com/sinamics-s210/documentation
https://support.industry.siemens.com/cs/document/109748999

© Siemens 2022

Overview

As far as necessary, braking resistors are integrated into the converters. Together with the generously dimensioned DC link capacities, another external braking resistor is not necessary in the normal case.

If the internal braking resistor is inadequate for applications with very high requirements, an external braking resistor can be connected as an alternative.

Only intrinsically safe braking resistors with temperature monitoring may be used in order to minimize the risk of an explosion, the outbreak of fire or melting of the enclosure in the event of a continuous overload, e.g. due to a defect.

External braking resistors for 200 V to 240 V 3 AC

For operation with a supply voltage of 200 V to 240 V 3 AC, an external, intrinsically safe braking resistor is always required for each converter. Use of braking resistors integrated in the converter is not permissible with this supply voltage.

The following resistors are recommended as a substitute for the internal braking resistors. If these are not sufficient, the resistors from Michael Koch GmbH listed in the table can be used.

- 100 W, 47 Ω for frame sizes FSA and FSB:
  GXK:BWG250047TS-190
- 240 W, 14 Ω for frame size FSC:
  GXK:BWG600014TS-190

These resistors have approvals for the North American market (cURus and CSA).

If the temperature sensor of the resistor is connected to the input DI4 of the converter, the converter switches off when the braking resistor is overloaded.

More Information

Further information is available from the "Siemens Product Partner for Drives Options":
www.siemens.com/drives-options-partner

Technical specifications

Requirements placed on an external braking resistor

Converter		Braking resistor			
Article No.	Rated power	Min. resistance	Max. continuous power	Max. peak power	Max. braking energy
6SL3210-...	kW	Ω	W	W	kJ
Line voltage 200 ... 240 V 1 AC					
5HB10-1UF0	0.1	300	50	350	0.7
5HB10-2UF0	0.2	150	100	600	1.3
5HB10-4UF0	0.4	100	200	1300	2.3
5HB10-8UF0	0.75	50	380	2400	3.8
Line voltage 200 ... 240 V 3 AC					
5HE10-4UF0	0.4	100	200	600	1
5HE10-8UF0	0.75	100	380	1200	1
5HE11-0UF0	1	100	500	1700	1
5HE11-5UF0	1.5	50	880	2900	20
5HE12-0UF0	2	50	1000	3800	20
5HE13-5UF0	3.5	15	1750	7500	25
5HE15-0UF0	5	15	2500	9500	25
5HE17-0UF0	7	15	3250	12500	25
Line voltage 380 ... 480 V 3 AC					
5HE10-4UF0	0.4	200	200	1200	8
5HE10-8UF0	0.75	200	380	2400	8
5HE11-0UF0	1	200	500	3400	8
5HE11-5UF0	1.5	100	880	5700	80
5HE12-0UF0	2	100	1000	7600	80
5HE13-5UF0	3.5	30	1750	15000	100
5HE15-0UF0	5	30	2500	19000	100
5HE17-0UF0	7	30	3250	25000	100

Examples of braking resistors from Michael Koch GmbH

Converter	Braking resistors from Michael Koch GmbH				
Article No.	Order designation with temperature sensor 190 °C (Can only be obtained directly from Michael Koch GmbH)	Continuous power		Max. peak power	Max. braking energy
		for CE	for UL		
6SL3210-...		W	W	W	kJ
Line voltage 200 ... 240 V 1 AC					
5HB10-1UF0	BWG250047TS-190	50	50	350	0.7
5HB10-2UF0	BWG250047TS-190	100	100	600	1.1
5HB10-4UF0	BWG250047TS-190	100	100	1300	1.8
5HB10-8UF0	BWG500027TS-190	200	200	2400	2.7
Line voltage 200 ... 240 V 3 AC					
5HE10-4UF0	BWG500027TS-190	200	200	600	0.9
5HE10-8UF0	BWG600014TS-190	380	240	1200	0.8
5HE11-0UF0	BWG600014TS-190	400	240	1700	0.8
5HE11-5UF0	BWD500027K03LIP65IS	600	600	2900	14.5
5HE12-0UF0	BWD500027K03LIP65IS	600	600	3800	13.9
5HE13-5UF0	BWD600014K03LIP65IS	1200	720	7500	18.7
5HE15-0UF0	BWD600014K03LIP65IS	1200	720	9500	17.8
5HE17-0UF0	BWD600014K03LIP65IS	1200	720	12500	18.2
Line voltage 380 ... 480 V 3 AC					
5HE10-4UF0	BWG500100TS-190	200	200	1200	5.2
5HE10-8UF0	BWG600047TS-190	380	240	2400	6.2
5HE11-0UF0	BWG600047TS-190	400	240	3400	6.1
5HE11-5UF0	BWD500100K03LIP65IS	600	600	5700	30.4
5HE12-0UF0	BWD500100K03LIP65IS	600	600	7600	30.4
5HE13-5UF0	BWD600047K03LIP65IS	1200	720	15000	50
5HE15-0UF0	BWD600047K03LIP65IS	1200	720	19000	47.5
5HE17-0UF0	BWD600047K03LIP65IS	1200	720	25000	41.7

© Siemens 2022

2

Overview

SINAMICS memory card (SD card)

The parameter assignment, firmware and licenses for a converter can be stored on the SINAMICS memory card (SD card). When service is required, e.g. after the converter has been replaced and the data have been downloaded from the memory card the drive system is immediately ready for use again.

The memory card has the following functions:

- Parameter settings can be written from the memory card to the converter or saved from the converter to the memory card
- The memory card supports series commissioning without the use of a commissioning tool
- If firmware is stored on the memory card, the firmware can be upgraded/downgraded during startup
- It is used for storing licenses when using functions under license, e.g. the license for enabling the Extended Safety Functions
  - Safe Stop 1 (SS1) [1)]
  - Safe Stop 2 (SS2)
  - Safe Operating Stop (SOS)
  - Safely-Limited Speed (SLS)
  - Safe Speed Monitor (SSM)
  - Safe Direction (SDI)
  - Safely-Limited Acceleration (SLA)
  - Safe Brake Test (SBT) diagnostic function

Notes:

In general, the converter can be operated without a memory card. However, it is necessary if licenses, such as the Extended Safety license, are required. The card must then remain permanently inserted.

Firmware V5.2 or higher is required for the 3 AC series or when using the SINAMICS Startdrive commissioning tool.

Selection and ordering data

Description	Article No.
SINAMICS SD card 512 MB Firmware V5.2 or higher is required for the 3 AC series.	
• Empty	**6SL3054-4AG00-2AA0**
• With firmware V5.1	**6SL3054-4FB00-2BA0**
• With firmware V5.1 SP1	**6SL3054-4FB10-2BA0**
• With firmware V5.1 SP1 and Safety license (Extended Functions)	**6SL3054-4FB10-2BA0-Z F01**
• With firmware V5.2	**6SL3054-4FC00-2BA0**
• With firmware V5.2 and Safety license (Extended Functions)	**6SL3054-4FC00-2BA0-Z F01**
• With firmware V5.2 SP3	**6SL3054-4FC30-2BA0**
• With firmware V5.2 SP3 and Safety license (Extended Functions)	**6SL3054-4FC30-2BA0-Z F01**
Safety license (Extended Functions) [2)]	
• CoL in paper form	**6SL3074-0AA10-0AA0**
• CoL in electronic form	**6SL3074-0AA10-0AH0**

1) Safe Stop 1 time controlled (SS1-t) is also included in the Safety Integrated Basic functions.

2) Extended function for an existing memory card (firmware V5.1 SP1 or higher). The memory card is not included in the scope of delivery. The Safety license can also be ordered together with a memory card (see above). With a CoL in electronic form, the license is supplied as a PDF file. Notification of this with a download link is received by email.
For further information to CoL in electronic form, see next page.
For further information to CoL, see section Software licenses.

© Siemens 2022

More information

Certificate of License (CoL)

The CoL is the licensee's proof that the use of the software has been licensed by Siemens. A CoL must be assigned to each use and must be kept in a safe place.

Electronic Certificate of License
The electronic Certificate of License is the paperless delivery form for runtime options for SINAMICS, SIMOTION, and SINUMERIK.

Like the previous paper Certificate of License CoL, the electronic Certificate of License contains information about the type of rights of use purchased for the software. The electronic Certificate of License is supplied as a PDF file via the Online Software Delivery Portal (OSD). This enables quick notification with a download link to the email address to be stated in the order.

The electronic Certificate of License can then be downloaded from the OSD. The Web License Manager can also be called from the OSD to assign the runtime license to a memory card. In this case, the data of the electronic Certificate of License are automatically transferred to the Web License Manager and do not have to be entered manually.
This ensures quick availability of the license key and simple and secure handling and management of the license certificates.

You will find information on the OSD at:
https://support.industry.siemens.com/cs/document/109759444

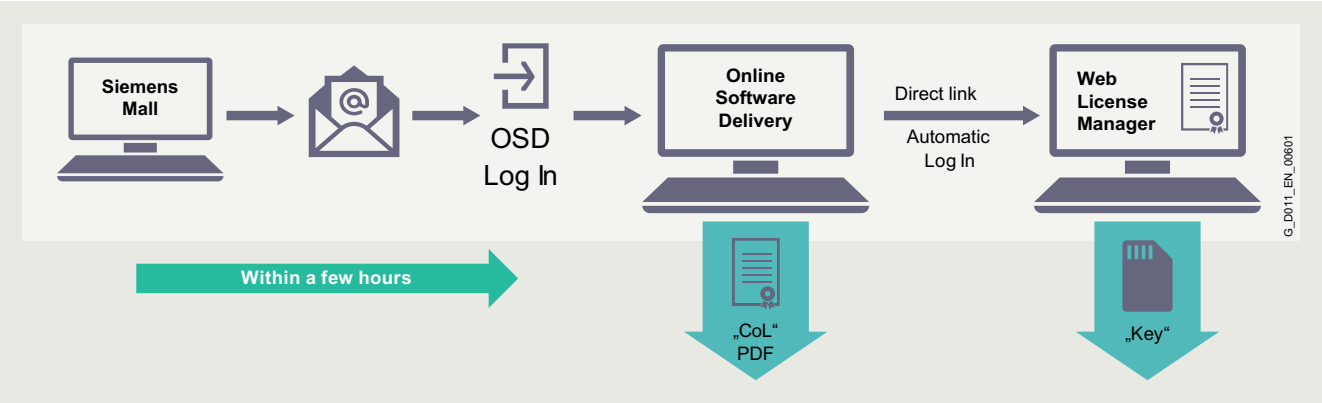

Electronic Certificate of License: Procedure for order licenses

In the future, the pre-licensed memory cards will also be delivered with the corresponding electronic Certificates of License on the memory card. The Certificates of License are stored in directory "KEYS". The pre-licensed memory cards will successively make the transition from paper CoLs to electronic CoLs. The CoL on paper will then no longer be contained in the delivery.

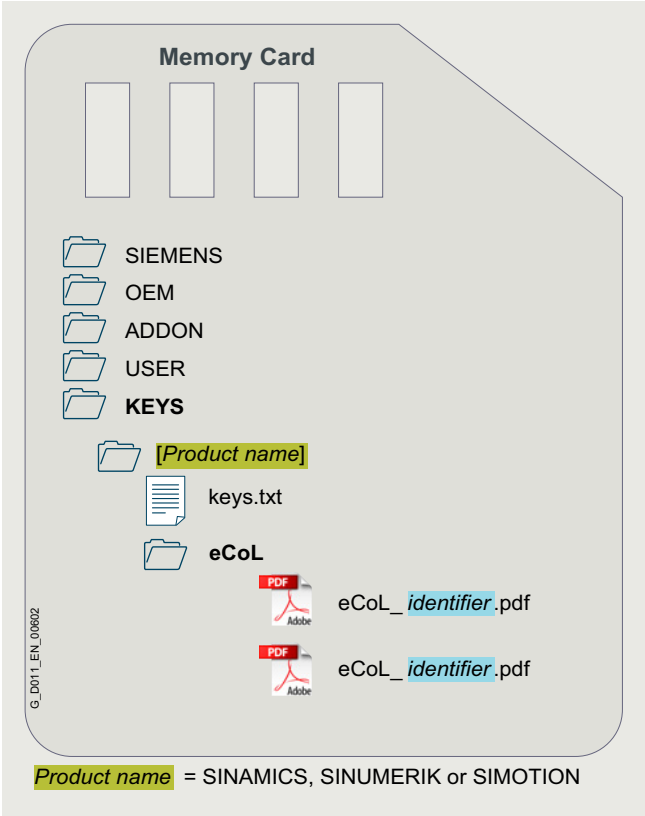

Electronic Certificate of License: Storage location on data medium

© Siemens 2022

Notes

© Siemens 2022

SIMOTICS S servomotors and servo planetary geared motors for SINAMICS S210

3

3/2	**Overview**
3.1/1	**SIMOTICS S-1FK2 servomotors**
3.2/1	**SIMOTICS S-1FT2 servomotors**
3.3/1	**SIMOTICS S-1FS2 servomotors**
3.4/1	**SIMOTICS S-1FK2 and NEW S-1FT2 servo planetary geared motors**

Detailed technical information on the SINAMICS S210 servo drive system is available on the internet at:
www.siemens.com/sinamics-s210/documentation

In addition, the Drive Technology Configurator (DT Configurator) can be used on the internet at the following address:
www.siemens.com/sinamics-s210/configuration

Siemens D 32 · February 2022

© Siemens 2022

Overview

	SIMOTICS S servomotors for SINAMICS S210		
	1FK2	**1FT2**	**1FS2**
	High Dynamic (HD) / Compact (CT)	High Dynamic (HD) / Compact (CT)	High Dynamic (HD) / Compact (CT)
	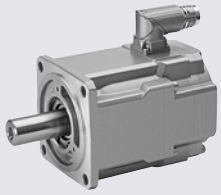	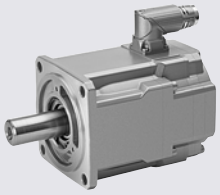	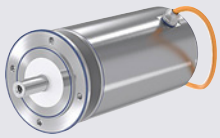
Shaft heights			
• SH20	HD (1FK2102)	HD (1FT2102)	–
• SH30	HD (1FK2103) / CT (1FK2203)	HD (1FT2103) / CT (1FT2203)	–
• SH40	HD (1FK2104) / CT (1FK2204)	HD (1FT2104) / CT (1FT2204)	HD (1FS2104)
• SH48	CT (1FK2205)	CT (1FT2205)	–
• SH52	HD (1FK2105)	HD (1FT2105)	HD (1FS2105)
• SH63	HD (1FK2106) / CT (1FK2206)	HD (1FT2106) / CT (1FT2206)	HD (1FS2106)
• SH80	CT (1FK2208)	CT (1FT2208)	CT (1FS2208)
• SH100	CT (1FK2210)	CT (1FT2210)	–
Static torque M_0	0.16 ... 40 Nm (0.12 ... 29.50 lb_f-ft)	0.16 ... 40 Nm (0.12 ... 29.50 lb_f-ft)	3.1 ... 23.5 Nm (2.29 ... 17.33 lb_f-ft)
Rated power P_N	Up to 6.4 kW	Up to 6.4 kW	Up to 2.51 kW
Applications	• Packaging machines • Handling equipment • Feed and withdrawal devices • Stacking units • Automatic assembly machines • Laboratory automation • Woodworking, glass and ceramic industries • Digital printing machines	• Packaging machines • Handling equipment • Feed and withdrawal devices • Stacking units • Automatic assembly machines • Laboratory automation • Woodworking, glass and ceramic industries • Digital printing machines	• Food and beverage industries • Pharmaceutical industry • Packaging machines • Handling equipment • Feed and withdrawal devices
Housing/paint finish	Aluminum/anthracite gray	Aluminum/anthracite gray Optionally other colors possible	Stainless steel
Degree of protection	IP64 IP65 optional or retrofittable	IP64 IP65 optional or retrofittable, IP67 optional	IP66/IP67, IP69K (30 bars)
Encoder systems			
• Absolute encoder 22-bit singleturn	✓	✓	–
• Absolute encoder 22-bit + 12-bit multiturn	✓	✓	✓
• Absolute encoder 26-bit singleturn	–	✓	–
• Absolute encoder 26-bit + 12-bit multiturn	–	✓	–
Notes	• Also available as servo planetary geared motor 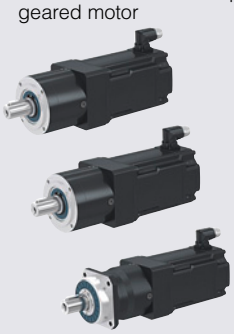	• Versions with increased rated and maximum speed • Options: - Increased detergent resistance - Pressure balance - Metal rating plate - Coating color • Also available as servo planetary geared motor 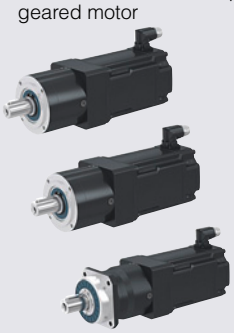	• Very high detergent resistance • Certification according to EHEDG • With connection cable (cable end and cable length up to 11 m can be selected)

© Siemens 2022

SIMOTICS S-1FK2 servomotors for SINAMICS S210

3.1

3.1/2 Overview
3.1/2 Benefits
3.1/2 Application
3.1/3 Selection and ordering data
3.1/6 Technical specifications
3.1/6 General technical specifications
3.1/11 Shaft height 20
3.1/13 Shaft height 30
3.1/16 Shaft height 40
3.1/20 Shaft height 48
3.1/22 Shaft height 52
3.1/24 Shaft height 63
3.1/27 Shaft height 80
3.1/30 Shaft height 100

Detailed technical information on the SINAMICS S210 servo drive system is available on the internet at:
www.siemens.com/sinamics-s210/documentation

In addition, the Drive Technology Configurator (DT Configurator) can be used on the internet at the following address:
www.siemens.com/sinamics-s210/configuration

© Siemens 2022

Overview

The SIMOTICS S-1FK2 servomotors are compact and highly dynamic synchronous motors for a wide range of uses in an industrial environment. They are characterized by high power density, degree of protection and overload capability.

SIMOTICS S-1FK2 High Dynamic motors

Highest dynamic response through low inertia for highly dynamic applications with low moved masses.

SIMOTICS S-1FK2 Compact motors

Precise, stable control with medium to high masses to be moved with medium moment of inertia.

Benefits

The SIMOTICS S-1FK2 servomotors fully exploit their strengths in the system with the SINAMICS S210 converter:

- Short adjustment and positioning times
- Quick and precise compensation of disturbances
- Stable closed loop control with high dynamic response

This is achieved by:

- Rapid control cycle
- High pulse frequency
- Complex rule algorithms
- High-resolution optical encoder with fast scanning
- Low moment of inertia of the motors
- High overload capability

Application

- Packaging machines
- Handling equipment
- Feed and withdrawal devices
- Stacking units
- Automatic assembly machines
- Laboratory automation
- Woodworking, glass and ceramic industries
- Digital printing machines

© Siemens 2022

Selection and ordering data

	Static torque M_0 Nm (lb_f-ft)	Maximum torque M_{max} Nm (lb_f-ft)	Maximum speed n_{max} rpm	Rated speed for 200 ... 240 V 1 AC / 3 AC n_N rpm	Rated speed for 380 ... 480 V 3 AC n_N rpm	Rotor moment of inertia J_{Mot} kg cm^2 (lb_f-in^2)		SIMOTICS S-1FK2 servomotor Article No.
High Dynamic for highly dynamic applications								
Shaft height 20								
	0.16 (0.12)	0.56 (0.41)	8000	3000	–	0.025 (0.009)		**1FK2102-0AG■■-■■A0**
	0.32 (0.24)	1.11 (0.82)	8000	3000	–	0.036 (0.012)		**1FK2102-1AG■■-■■A0**
Shaft height 30								
	0.64 (0.47)	1.95 (1.44)	8000	3000	–	0.093 (0.032)		**1FK2103-2AG■■-■■A0**
	0.64 (0.47)	1.95 (1.44)	8000	–	4500	0.093 (0.032)	NEW	**1FK2103-2AH■■-■■A0**
	1.27 (0.94)	4.05 (2.99)	8000	3000	–	0.14 (0.048)		**1FK2103-4AG■■-■■A0**
	1.27 (0.94)	4.05 (2.99)	8000	–	4500	0.14 (0.048)	NEW	**1FK2103-4AH■■-■■A0**
Shaft height 40								
	1.27 (0.94)	3.75 (2.77)	7200	1500	3000	0.35 (0.120)		**1FK2104-4AF■■-■■A0**
	1.27 (0.94)	3.85 (2.84)	8000	3000	6000	0.35 (0.120)		**1FK2104-4AK■■-■■A0**
	2.4 (1.77)	7.5 (5.53)	6700	1500	3000	0.56 (0.191)		**1FK2104-5AF■■-■■A0**
	2.4 (1.77)	7.6 (5.61)	8000	3000	6000	0.56 (0.191)		**1FK2104-5AK■■-■■A0**
	3.2 (2.36)	10 (7.38)	7200	1500	3000	0.76 (0.260)		**1FK2104-6AF■■-■■A0**
Shaft height 52								
	5 (3.69)	15 (11.06)	6000	1500	3000	1.7 (0.581)		**1FK2105-4AF■■-■■A0**
	8 (5.90)	24 (17.70)	6000	1500	3000	2.7 (0.923)		**1FK2105-6AF■■-■■A0**
Shaft height 63								
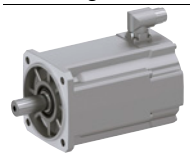	9 (6.64)	26 (19.18)	6000	1500	3000	4.6 (1.572)		**1FK2106-3AF■■-■■A0**
	12 (8.85)	33 (24.34)	6000	1500	3000	6.0 (2.050)		**1FK2106-4AF■■-■■A0**
	16 (11.80)	45.5 (33.56)	6000	1500	3000	8.7 (2.973)		**1FK2106-6AF■■-■■A0**

Article No. supplements			
Holding brake			
Without brake	**0**		
With brake	**1**		
Degree of protection			
IP64 (without shaft sealing ring)		**0**	
IP65 (with shaft sealing ring)		**1**	
Shaft extension, feather key			
Plain shaft			**0**
Shaft with feather key			**1**
Plain shaft, reduced shaft diameter, Ø11 × 23 mm (0.43 × 0.91 in) (only for 1FK2.03 and IP64), Ø14 × 30 mm (0.55 × 1.18 in) (only for 1FK2.04 and IP64)		**0**	**2**
Encoder			
Absolute encoder 22-bit singleturn			**S**
Absolute encoder 22-bit + 12-bit multiturn			**M**

© Siemens 2022

Selection and ordering data

	Static torque M_0 Nm (lb_f-ft)	Maximum torque M_{max} Nm (lb_f-ft)	Maximum speed n_{max} rpm	Rated speed for 200 ... 240 V 1 AC / 3 AC n_N rpm	Rated speed for 380 ... 480 V 3 AC n_N rpm	Rotor moment of inertia J_{Mot} kg cm² (lb_f-in²)		SIMOTICS S-1FK2 servomotor Article No.
Compact for high precision applications								
Shaft height 30								
	0.64 (0.47)	1.85 (1.36)	8000	3000	–	0.20 (0.068)		1FK2203-2AG■■-■■A0
	0.64 (0.47)	1.85 (1.36)	8000	–	6000	0.20 (0.068)	NEW	1FK2203-2AK■■-■■A0
	1.27 (0.94)	3.75 (2.77)	8000	3000	–	0.35 (0.120)		1FK2203-4AG■■-■■A0
	1.27 (0.94)	3.75 (2.77)	8000	–	6000	0.35 (0.120)	NEW	1FK2203-4AK■■-■■A0
Shaft height 40								
	2.4 (1.77)	7.1 (5.24)	7500	1500	3000	1.2 (0.410)		1FK2204-5AF■■-■■A0
	2.4 (1.77)	7.1 (5.24)	8000	3000	6000	1.2 (0.410)		1FK2204-5AK■■-■■A0
	3.2 (2.36)	9.5 (7.01)	7600	1500	3000	1.6 (0.547)		1FK2204-6AF■■-■■A0
Shaft height 48								
	3.6 (2.66)	10.8 (7.97)	6000	1500	3000	3.2 (1.093)		1FK2205-2AF■■-■■A0
	6 (4.43)	18 (13.28)	6000	1500	3000	5.1 (1.743)		1FK2205-4AF■■-■■A0
Shaft height 63								
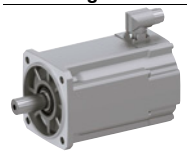	6.5 (4.79)	18 (13.28)	6000	1500	3000	7.8 (2.665)		1FK2206-2AF■■-■■A0
	12 (8.85)	36 (26.55)	5800	1500	3000	15 (5.126)		1FK2206-4AF■■-■■A0
Shaft height 80								
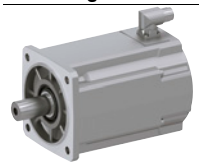	18 (13.28)	51 (37.62)	4100	1000	2000	30 (10.251)		1FK2208-3AC■■-■■A0
	22 (16.23)	66 (48.68)	4600	1000	2000	39 (13.326)		1FK2208-4AC■■-■■A0
	27 (19.92)	80 (59.01)	4700	1000	2000	48 (16.402)		1FK2208-5AC■■-■■A0
Shaft height 100								
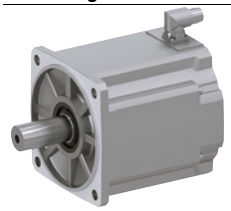	30 (22.13)	90 (66.38)	2500	750	1500	89 (30.411)		1FK2210-3AB■■-■■A0
	30 (22.13)	90 (66.38)	4400	1000	2000	89 (30.411)		1FK2210-3AC■■-■■A0
	40 (29.50)	120 (88.51)	2500	750	1500	120 (41.004)		1FK2210-4AB■■-■■A0
	40 (29.50)	120 (88.51)	3300	1000	2000	120 (41.004)		1FK2210-4AC■■-■■A0

Article No. supplements			
Holding brake			
Without brake	0		
With brake	1		
Degree of protection			
IP64 (without shaft sealing ring)		0	
IP65 (with shaft sealing ring)		1	
Shaft extension, feather key			
Plain shaft			0
Shaft with feather key			1
Plain shaft, reduced shaft diameter, Ø11 × 23 mm (0.43 × 0.91 in) (only for 1FK2.03 and IP64), Ø14 × 30 mm (0.55 × 1.18 in) (only for 1FK2.04 and IP64)		0	2
Encoder			
Absolute encoder 22-bit singleturn			S
Absolute encoder 22-bit + 12-bit multiturn			M

© Siemens 2022

Selection and ordering data

Accessories

Description	For motor	Article No.
Shaft sealing ring	1FK2.02	**1FY2902-0GC00**
To achieve degree of protection IP65	1FK2.03	**1FY2903-0GC00**
Degree of protection kit for mounting on the motor for retrofitting or as spare part	1FK2.04	**1FY2904-0GC00**

Structure of the Article No. of the SIMOTICS S-1FK2 servomotors

Data position in Article No.	1	2	3	4	5	6	7		8	9	10	11	12		13	14	15	16
	1	**F**	**K**	**2**	■	■	■	-	■	**A**	■	■	■	-	■	■	**A**	**0**
1st to 4th position: digit, letter, letter, digit	**Motor**	1	F	K	2													
5th position: digit	**Moment of inertia**																	
	High Dynamic				1													
	Compact				2													
6th and 7th positions: digit, digit	**Shaft height**																	
	20					0	2											
	30					0	3											
	40					0	4											
	52				1	0	5											
	48				2	0	5											
	63					0	6											
	80					0	8											
	100					1	0											
8th position: digit	**Overall length**																	
	See specific technical specifications								0 ... 8									
9th position: letter	Reserved									A								
10th position: letter	**Winding/rated speed**																	
	For converters connected to max. 240 V							**For converters connected to max. 480 V**										
	750 rpm at 230 V							1500 rpm at 400 V			B							
	1000 rpm at 240 V							2000 rpm at 400 V			C							
	1500 rpm at 230 V							3000 rpm at 400 V			F							
	3000 rpm at 230 V							Not permissible			G							
	2500 rpm at 230 V							4500 rpm at 400 V			H							
	3000 rpm at 230 V							6000 rpm at 400 V			K							
11th position: digit	**Brake**																	
	None											0						
	Holding brake											1						
12th position: digit	**Degree of protection**																	
	IP64 (without shaft sealing ring)												0					
	IP65 (with shaft sealing ring)												1					
13th position: digit	**Shaft extension, feather key**																	
	Plain shaft														0			
	Shaft with feather key														1			
	Plain shaft, reduced shaft diameter Ø11 × 23 mm (0.43 × 0.91 in) (only for 1FK2.03 and IP64), Ø14 × 30 mm (0.55 × 1.18 in) (only for 1FK2.04 and IP64)												0		2			
14th position: letter	**Encoder**																	
	Absolute encoder 22-bit singleturn (AS22DQC)															S		
	Absolute encoder 22-bit + 12-bit multiturn (AM22DQC)															M		
15th position: letter	**One Cable Connection**																A	
16th position: digit	Reserved																	0

© Siemens 2022

Technical specifications

General technical specifications

SIMOTICS S-1FK2 High Dynamic/Compact motors	
Motor type	Permanent-magnet synchronous motor
Permissible operating conditions without derating • Ambient temperature • Installation altitude, max.	 -15 ... +40 °C (5 ... 104 °F) 1000 m (3281 ft)
Degree of protection According to EN 60034-5 (IEC 60034-5)	IP64 IP65 optional or retrofittable
Cooling According to EN 60034-6	Natural cooling (IC410)
Type of construction According to EN 60034-7 (IEC 60034-7)	IM B5 (IM V1, IM V3)
Shaft extension According to DIN 748-3 (IEC 60072-1)	Plain shaft Optional shaft with feather key (half-key balancing)
Shaft and flange accuracy According to DIN 42955 (IEC 60072-1)	Tolerance N In each case for radial eccentricity of the shaft extension, concentricity of the centering ring, and axial eccentricity of the mounting flange to the axis of the shaft extension.
Vibration severity grade According to EN 60034-14 (IEC 60034-14)	Grade A is maintained up to rated speed
Stator winding insulation According to EN 60034-1 (IEC 60034-1) • 1FK2102, 1FK2.03 • 1FK2.04, 1FK2.05, 1FK2.06, 1FK2.08, 1FK2.10	 Thermal class 130 (B) for a winding overtemperature of ΔT = 80 K Thermal class 155 (F) for a winding overtemperature of ΔT = 100 K
Sound pressure level L_{pA} (1 m), max. According to ISO 1680 • 1FK2102, 1FK2.03, 1FK2.04 • 1FK2.05 and 1FK2.06 • 1FK2.08 and 1FK2.10	 55 dB(A) + 3 dB(A) tolerance 65 dB(A) + 3 dB(A) tolerance 70 dB(A) + 3 dB(A) tolerance
Encoder system	• AS22DQC (absolute encoder 22-bit singleturn) • AM22DQC (absolute encoder 22-bit + 12-bit multiturn)
Holding brake	Optional integrated holding brake
Connection	One Cable Connection (OCC) for signals and power Rotatable connector
Paint finish	RAL 7016 (anthracite gray)
Certificates of suitability	cURus, CE

© Siemens 2022

Technical specifications

Regulations, standards, specifications

The motors comply with the appropriate standards and regulations, see table below.

As a result of the fact that in many countries the national regulations have been completely harmonized with the international IEC 60034-1 recommendation, there are no longer any differences with respect to coolant temperatures, temperature classes and temperature rise limits.

General specifications for rotating electrical machines	IEC 60034-1
Terminal designations and direction of rotation for electrical machines	IEC 60034-8
Types of construction of rotating electrical machines	IEC 60034-7
Cooling methods of rotating electrical machines	IEC 60034-6
Degrees of protection of rotating electrical machines	IEC 60034-5
Vibration severity of rotating electrical machines	IEC 60034-14
Noise limit values for rotating electrical machines	IEC 60034-9
Cylindrical shaft extensions for electrical machines	DIN 748-3/IEC 60072-1

SIMOTICS S-1FK2 motors have UL approval from Underwriters Laboratories Inc. and are marked with the "UL Recognized Component" test symbol. This is used for components which are part of a larger product or system. This confirmed compliance with the corresponding US American and Canadian regulations, and allowed access to the North American market.

For SIMOTICS S-1FK2 motors, conformity with the relevant EC directives 2006/95/EC and 2014/35/EU and the relevant standards EN 60034-1:2010 and EN 60204-1:2006 is confirmed. By applying the CE mark to the product, Siemens AG confirms this for the product, and secures the free movement of goods within the European Union.

Degree of protection acc. to IEC 60034-5

A suitable degree of protection must be selected according to the operating and environmental conditions to protect the machine against damage caused by the ingress of water and other liquids, as well as dust and foreign bodies.

SIMOTICS S-1FK2 motors have degree of protection IP64 as standard.

The motor can be optionally supplied with a radial shaft seal ring in degree of protection IP65. This increases the protection against the ingress of liquids.

The degree of protection designation is composed from the code **IP** (for International Protection) and two code numbers for the protection against touching and penetration of foreign bodies, and the degree of protection against the ingress of water.

First code number

6: Protection against dust ingress and complete protection against touching

Second code number

4: Protection against splashwater from any direction

5: Protection against jet water from any direction

Recommended degrees of protection for AC motors

When cooling lubricants are used, protection against water alone is inadequate. The IP rating should only be considered as a guide value in this case. The motors may have to be protected by suitable covers. Attention must be paid to providing suitable sealing of the motor shaft for the selected degree of protection for the motor.

The following table can serve as a decision aid for selecting the proper degree of protection for motors. A permanent covering of liquid on the flange must be avoided when the motor is mounted with the shaft extension facing upwards (IM V3).

Effect	General workshop environment	Water/general cooling lubricant (95 % water, 5 % oil)
Dry	IP64	–
Water-enriched environment	–	IP64
Mist	–	IP65
Spray	–	IP65

© Siemens 2022

Technical specifications

Type of construction, mounting position according to IEC 60034-7

SIMOTICS S-1FK2 motors are designed in type of construction IM B5. It can also be used in mounting positions IM V1 and IM V3.

Code 1	IM B5	IM V1	IM V3
Code 2	IM 3001	IM 3011	IM 3031
	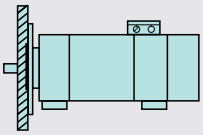	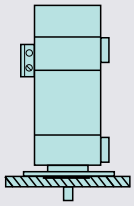	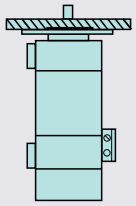
	Horizontal flange mounting	Flange mounting, output shaft pointing vertically downwards	Flange mounting, output shaft pointing vertically upwards

Shaft and flange accuracy in accordance with IEC 60072-1

Radial eccentricity tolerance of shaft in relation to housing axis

(referred to cylindrical shaft extensions)

Motor	Shaft extensions D × L mm (in)	Radial eccentricity Tolerance N µm
1FK2102	8 × 25 (0.31 × 0.98)	30
1FK2.03	14 × 30 (0.55 × 1.18)	35
	11 × 23 (0.43 × 0.91)	35
1FK2.04	19 × 40 (0.75 × 1.57)	40
	14 × 30 (0.55 × 1.18)	35
1FK2.05	19 × 40 (0.75 × 1.57)	40
1FK2.06	24 × 50 (0.94 × 1.97)	40
1FK2208	32 × 58 (1.26 × 2.28)	50
1FK2210	38 × 80 (1.50 × 3.15)	50

Concentricity and axial eccentricity tolerance of the flange surface for the shaft axis

(referred to the centering diameter of the mounting flange)

Motor	Centering diameter mm (in)	Concentricity and axial eccentricity Tolerance N µm
1FK2102	30 (1.18)	80
1FK2.03	50 (1.97)	
1FK2.04	70 (2.76)	
1FK2205	80 (3.15)	
1FK2105	95 (3.74)	
1FK2.06	110 (4.33)	100
1FK2208	130 (5.12)	
1FK2210	130 (5.12)	

Test: runout

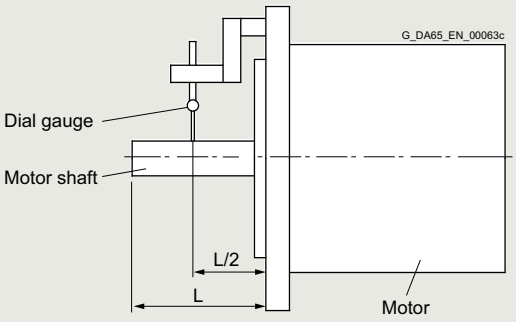

Test: concentricity

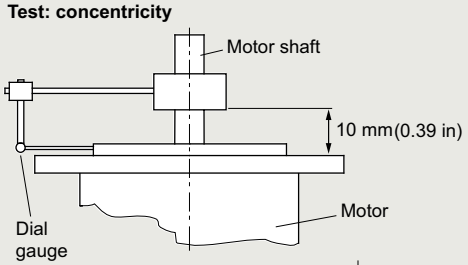

Test: perpendicularity

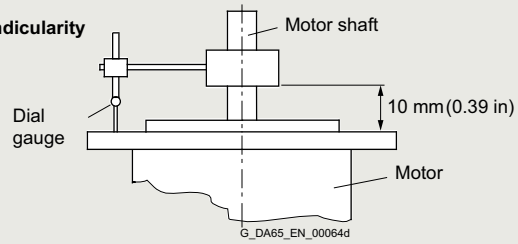

© Siemens 2022

Technical specifications

Vibration severity and vibration severity grade A according to IEC 60034-14

The vibration severity is the RMS value of the vibration velocity (frequency range from 10 Hz to 1000 Hz). The vibration severity is measured using electrical measuring devices according to DIN 45666.

The specified values refer only to the motor. These values can increase as a result of the overall system vibrational behavior due to installation.

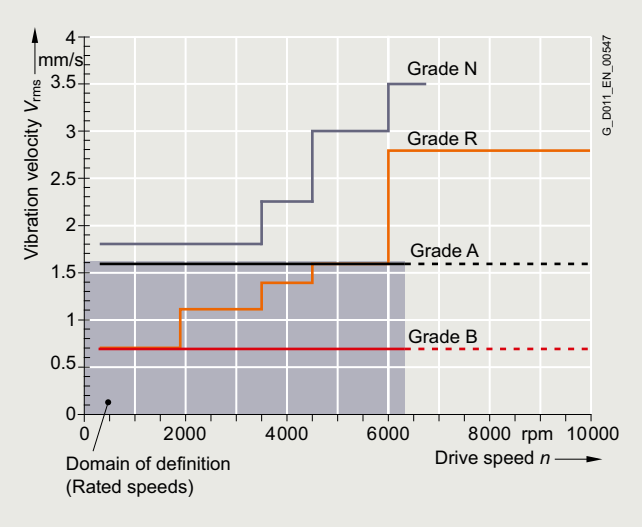

Vibration severity limit values

The speeds of 1800 rpm and 3600 rpm and the associated limit values are specified according to IEC 60034-14.
The speeds of 4500 rpm and 6000 rpm and the specified values are defined by the motor manufacturer.

The motors maintain vibration severity grade A up to the rated speed.

Balancing according to ISO 21940-32

Apart from the balance quality of the motor, the vibrational quality of motors with attached pulleys is mainly determined by the balance state of the mounted component. If the motor and the mounted component are balanced separately before being joined, the balancing process of the pulley is to be adapted to the motor's balancing type.

SIMOTICS S-1FK2 motors with feather keys are always half-key balanced. In general, motors with a plain shaft are recommended for systems with the most stringent vibrational quality requirements.

Vibration stress, immitted vibration values

The requirements of environmental class 3M8 (according to EN 60721-3-3 Table 6) must be maintained for proper function and safeguard the bearing life. The following limits are valid for (immitted) vibration values introduced into the motor from outside:

- Vibration velocity V_{rms} according to ISO 10816, max. 4.5 mm/s (0.18 in/s)
- Vibration acceleration a_{peak} axial and radial 50 m/s^2 (164 ft/s^2)

During transport, the motors withstand single shocks (6 ms) of up to 250 m/s^2 (820 ft/s^2).

Ambient temperature and installation altitude

Operating range without restrictions:

Temperature range from -15 °C to +40 °C (5.0 °F to 104 °F), installation altitude up to 1000 m (3281 ft).

If deviating conditions are encountered, the S1 characteristic of the motor must be adapted with regard to speed and torque.

Use the following equation to calculate the reduced S1 characteristic:
$S1_{red}\,(n) = x_D \times S1_{40°C;\ 1000m}\,(n/x_D)$

Installation altitude above sea level	Derating factor x_D at an ambient temperature of					
m (ft)	5 °C (41 °F)	10 °C (50 °F)	20 °C (68 °F)	30 °C (86 °F)	40 °C (104 °F)	50 °C (122 °F)
1000 (3281)	1.16	1.14	1.1	1.05	1	0.91
2000 (6562)	1.12	1.1	1.05	1	0.95	0.84

Encoder systems

In motors with integrated OCC/DRIVE-CLiQ interface, the sensor signal is already digitally prepared in the motor, and then transferred quickly and without loss to the drive system. Motors with an OCC/DRIVE-CLiQ interface simplify commissioning and diagnostics, as the motor parameters and encoder system are identified automatically.

Single-turn absolute encoder

This encoder outputs an absolute angular position between 0° and 360° in the specified resolution. In contrast to the multi-turn absolute encoder, it does not have a revolution counter, and can therefore only supply the position value within one revolution. It does not have a traversing range.

Multi-turn absolute encoder

This encoder outputs an absolute angular position between 0° and 360° in the specified resolution. It can also count 4096 revolutions. So with a ball screw, for example, the absolute position of the slide can be determined over a longer distance.

14th position in the Article No. of the motor	Designation	
1FK2...-.....-.**S**..	AS22DQC	Absolute encoder 22-bit singleturn (resolution 4194304)
1FK2...-.....-.**M**..	AM22DQC	Absolute encoder 22-bit + 12-bit multiturn (resolution 4194304, traversing range 4096 revolutions)

© Siemens 2022

Technical specifications

Holding brake

Many drives need a holding brake with an EMERGENCY STOP function for safety reasons or to meet process requirements. The brakes used on the SIMOTICS S-1FK2 motors function according to the closed-circuit principle. A spring or permanent magnet exerts a tensile force on the brake armature disk, i.e. in a state of zero current, the brake is closed and the motor shaft thereby stopped.

An electric current that flows through a coil generates an opposing field that counteracts the force effect of the spring or permanent magnet and releases or holds open the brake. Only a limited number of braking operations can be performed for an EMERGENCY STOP or power failure without causing excessive wear on the holding brake. The holding brake is not an operational brake. Regular dynamic braking leads to increased wear and premature brake failure. In order to ensure the functionality and specification of the brake, neither the total operating energy nor the maximum switching energy per braking operation may be exceeded.

The braking signal is already fully integrated into the SINAMICS S210 converter system, so that an external circuit is not necessary.

After an EMERGENCY STOP sequence with the maximum single switching energy, a cooling time of at least 5 minutes must be allowed.

The following table shows the technical specifications of the holding brakes for operation with SINAMICS S210 (for 1 AC devices, hardware version 2 or higher) and firmware V5.2 or higher.

Motor	Shaft height	Holding torque	Average dynamic braking torque	Maximum dynamic braking torque	Opening time	Closing time	Maximum permissible single switching energy	Total operating energy (service life)	Holding current	Break-induced current, typ. [1] for 500 ms
		Nm (lb_f-ft)	Nm (lb_f-ft)	Nm (lb_f-ft)	ms	ms	J	kJ	A	A
1FK2102	20	0.32 (0.24)	0.32 (0.24)	1 (0.74)	25	20	7.4	1.75	0.1	0.6
1FK2.03	30	1.3 (0.96)	1.3 (0.96)	3.9 (2.88)	40	30	62	17.5	0.15	0.8
1FK2.04	40	3.3 (2.43)	3.3 (2.43)	9 (6.64)	50	40	270	120	0.2	1.2
1FK2.05	48/52	8 (5.90)	5 (3.69)	18 (13.28)	35	20	570	284	0.3	1.1
1FK2106	63	16 (11.80)	9 (6.64)	35 (25.82)	70	35	1065	774	0.35	1.1
1FK2206	63	13 (9.59)	6.5 (4.79)	35 (25.82)	70	35	1550	774	0.35	1.1
1FK2208-3	80	19 (14.0)	12 (8.85)	37 (27.29)	70	35	2000	1800	0.4	1.2
1FK2208-4	80	32 (23.60)	17 (12.54)	70 (51.63)	120	40	4800	2400	0.5	1.4
1FK2208-5	80	32 (23.60)	17 (12.54)	70 (51.63)	120	40	4800	2400	0.5	1.4
1FK2210-3	100	32 (23.60)	17 (12.54)	70 (51.63)	120	40	6600	2400	0.5	1.4
1FK2210-4	100	55 (40.57)	26 (19.18)	100 (73.76)	130	65	8700	3800	0.5	1.5
1FK2210-5	100	55 (40.57)	26 (19.18)	100 (73.76)	130	65	8700	3800	0.5	1.5

[1] Typical values at an ambient temperature of 20 °C (68° F).
At -15 °C (5 °F), the break-induced currents can increase by up to 30 %.

© Siemens 2022

Technical specifications

SIMOTICS S-1FK2 shaft height 20

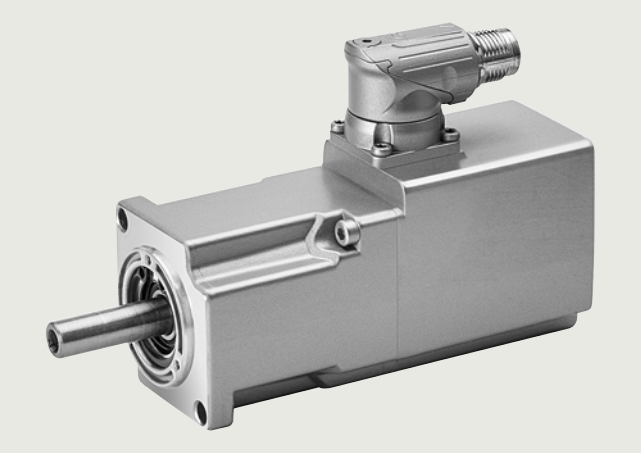

Specific technical specifications

SIMOTICS S-1FK2 servomotors		High Dynamic	
Shaft height 20		**1FK2102-0AG**	**1FK2102-1AG**
Static torque M_0	Nm (lb_f-ft)	0.16 (0.12)	0.32 (0.24)
Stall current I_0	A	0.75	0.76
Maximum torque M_{max}	Nm (lb_f-ft)	0.56 (0.41)	1.11 (0.82)
Maximum current I_{max}	A	3.1	2.95
Maximum speed n_{max}	rpm	8000	8000
Rotor moment of inertia J_{Mot}	kg cm^2 (lb_f-in^2)	0.025 (0.009)	0.036 (0.012)
Moment of inertia (with brake) $J_{Mot\ Br}$	kg cm^2 (lb_f-in^2)	0.029 (0.010)	0.040 (0.014)
Weight m_{Mot}	kg (lb)	0.47 (1.04)	0.60 (1.32)
Weight (with brake) $m_{Mot\ Br}$	kg (lb)	0.73 (1.61)	0.86 (1.90)
200 ... 240 V 1 AC / 3 AC			
Rated speed n_N	rpm	3000	3000
Rated torque M_N	Nm (lb_f-ft)	0.16 (0.12)	0.32 (0.24)
Rated current I_N	A	0.75	0.76
Rated power P_N	W	50	100
Suitable for SINAMICS S210 servo converter			
• 200 ... 240 V 1 AC		6SL3210-5HB10-1UF0	6SL3210-5HB10-1UF0
• 200 ... 240 V 3 AC		6SL3210-5HE10-4UF0	6SL3210-5HE10-4UF0

© Siemens 2022

Technical specifications

Dimensional drawing

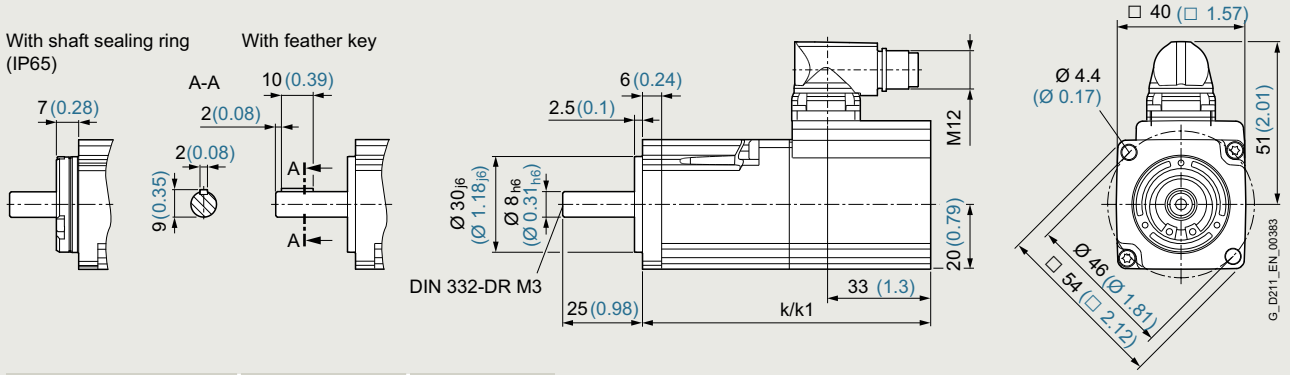

Shaft height 20 DIN IEC	Without brake k LB	With brake k1 LB1
1FK2102-0A...	90 (3.54)	121 (4.76)
1FK2102-1A...	106 (4.17)	137 (5.39)

All dimensions in mm (values in brackets are in inches).

Speed/torque characteristics

High Dynamic

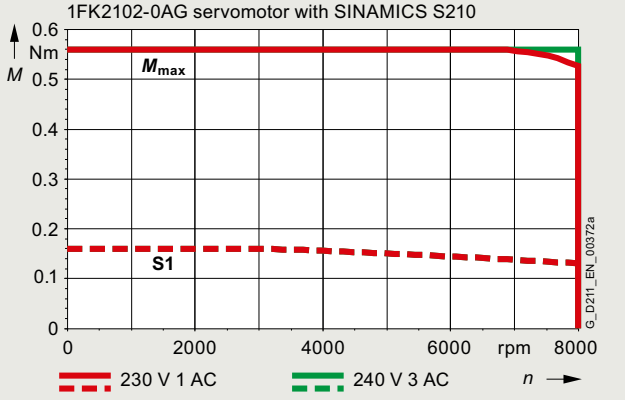

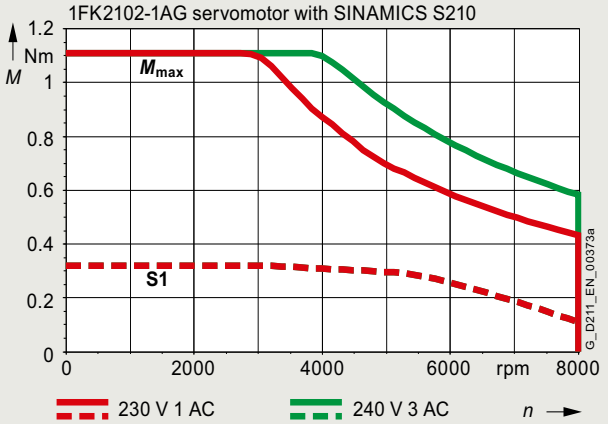

© Siemens 2022

Technical specifications

SIMOTICS S-1FK2 shaft height 30

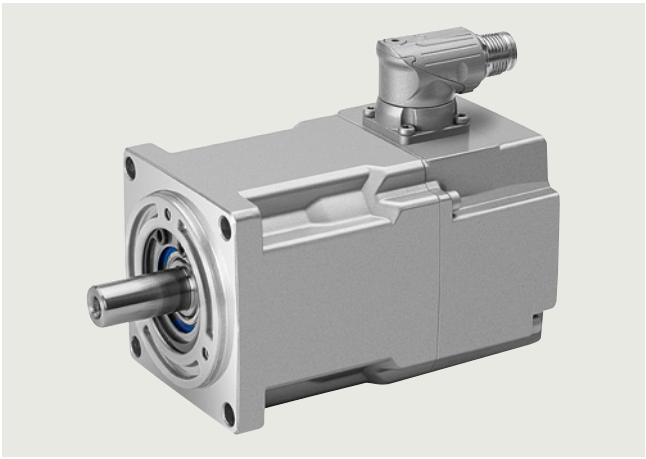

Specific technical specifications

SIMOTICS S-1FK2 servomotors		High Dynamic				Compact			
Shaft height 30		**1FK2103-2AG**	**1FK2103-2AH**	**1FK2103-4AG**	**1FK2103-4AH**	**1FK2203-2AG**	**1FK2203-2AK**	**1FK2203-4AG**	**1FK2203-4AK**
Static torque M_0	Nm (lb_f-ft)	0.64 (0.47)	0.64 (0.47)	1.27 (0.94)	1.27 (0.94)	0.64 (0.47)	0.64 (0.47)	1.27 (0.94)	1.27 (0.94)
Stall current I_0	A	1.36	1.06	2.4	1.87	1.38	1.05	2.52	2.05
Maximum torque M_{max}	Nm (lb_f-ft)	1.95 (1.44)	1.95 (1.44)	4.05 (2.99)	4.05 (2.99)	1.85 (1.36)	1.85 (1.36)	3.75 (2.77)	3.75 (2.77)
Maximum current I_{max}	A	4.8	3.95	8.7	7.1	4.2	3.4	7.8	6.7
Maximum speed n_{max}	rpm	8000	8000	7300	8000	8000	8000	7800	8000
Rotor moment of inertia J_{Mot}	kg cm^2 (lb_f-in^2)	0.093 (0.032)	0.093 (0.032)	0.14 (0.048)	0.14 (0.048)	0.20 (0.068)	0.20 (0.068)	0.35 (0.120)	0.35 (0.120)
Moment of inertia (with brake) $J_{Mot\ Br}$	kg cm^2 (lb_f-in^2)	0.11 (0.038)	0.11 (0.038)	0.16 (0.055)	0.16 (0.055)	0.22 (0.075)	0.22 (0.075)	0.37 (0.126)	0.37 (0.126)
Weight m_{Mot}	kg (lb)	1.17 (2.58)	1.18 (2.60)	1.64 (3.62)	1.65 (3.64)	1.15 (2.54)	1.16 (2.56)	1.48 (3.26)	1.49 (3.29)
Weight (with brake) $m_{Mot\ Br}$	kg (lb)	1.54 (3.40)	1.55 (3.42)	1.98 (4.37)	1.99 (4.39)	1.52 (3.35)	1.53 (3.37)	1.96 (4.32)	1.97 (4.34)
200 ... 240 V 1 AC / 3 AC									
Rated speed n_N	rpm	3000	–	3000	–	3000	–	3000	–
Rated torque M_N	Nm (lb_f-ft)	0.64 (0.47)	–	1.27 (0.94)	–	0.64 (0.47)	–	1.27 (0.94)	–
Rated current I_N	A	1.36	–	2.4	–	1.38	–	2.52	–
Rated power P_N	W	200	–	400	–	200	–	400	–
380 ... 480 V 3 AC									
Rated speed n_N	rpm	–	4500	–	4500	–	6000	–	6000
Rated torque M_N	Nm (lb_f-ft)	–	0.59 (0.44)	–	1.01 (0.74)	–	0.405 (0.299)	–	0.68 (0.50)
Rated current I_N	A	–	1.05	–	1.56	–	0.75	–	1.24
Rated power P_N	W	–	280	–	480	–	255	–	430
Suitable for SINAMICS S210 servo converter									
• 200 ... 240 V 1 AC		6SL3210-5HB10-2UF0		6SL3210-5HB10-4UF0		6SL3210-5HB10-2UF0		6SL3210-5HB10-4UF0	
• 200 ... 240 V 3 AC		6SL3210-5HE10-8UF0		6SL3210-5HE11-0UF0		6SL3210-5HE10-8UF0		6SL3210-5HE11-0UF0	
• 380 ... 480 V 3 AC		–	6SL3210-5HE10-4UF0	–	6SL3210-5HE10-8UF0	–	6SL3210-5HE10-4UF0	–	6SL3210-5HE10-8UF0

© Siemens 2022

Technical specifications

Dimensional drawing

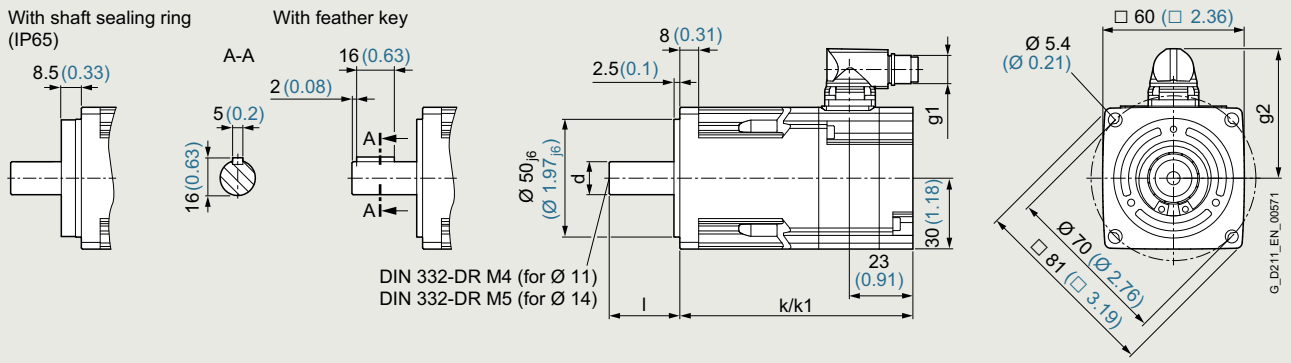

Shaft height 30 DIN IEC	Without brake k LB	With brake k1 LB1	With shaft Ø 14 d D	 l L	With shaft Ø 11 d D	 l L	Plug g1 G1	 g2 G2
1FK2.03-2AG	99 (3.9)	131 (5.16)	Ø 14_{h6} (Ø 0.55_{h6})	30 (1.18)	Ø 11_{k6} (Ø 0.43_{k6})	23 (0.91)	M12	55 (2.17)
1FK2.03-2AH 1FK2.03-2AK							M17	60 (2.36)
1FK2.03-4AG	123 (4.84)	155 (6.1)	Ø 14_{h6} (Ø 0.55_{h6})	30 (1.18)	Ø 11_{k6} (Ø 0.43_{k6})	23 (0.91)	M12	55 (2.17)
1FK2.03-4AH 1FK2.03-4AK							M17	60 (2.36)

All dimensions in mm (values in brackets are in inches).

Speed/torque characteristics

High Dynamic

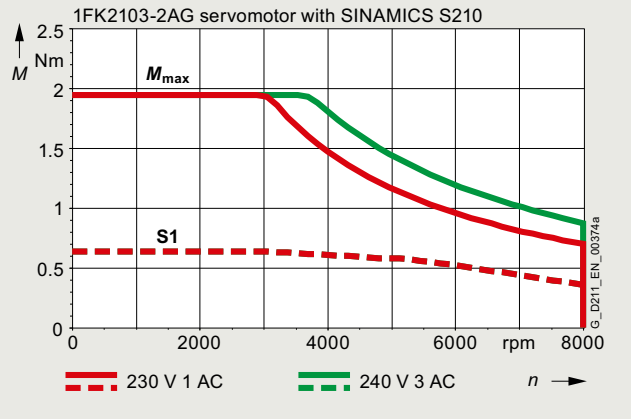

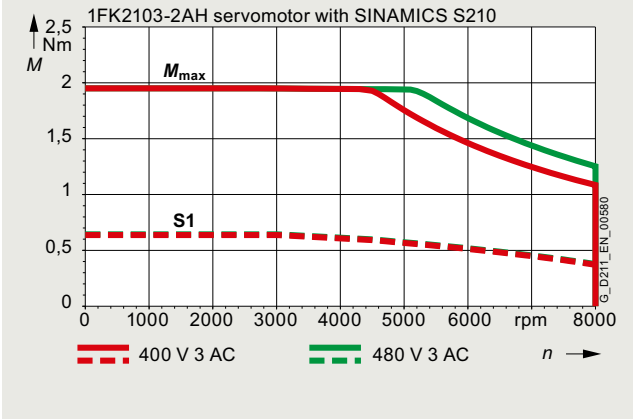

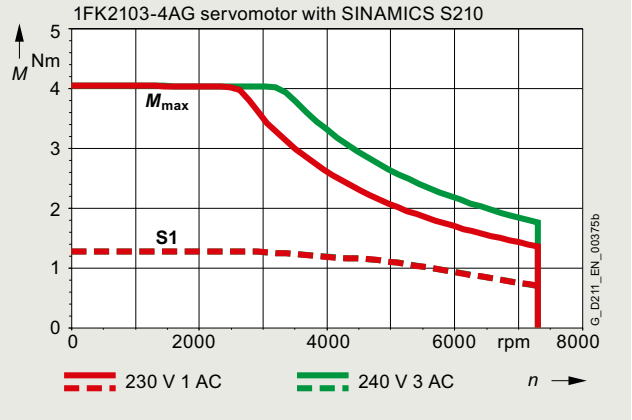

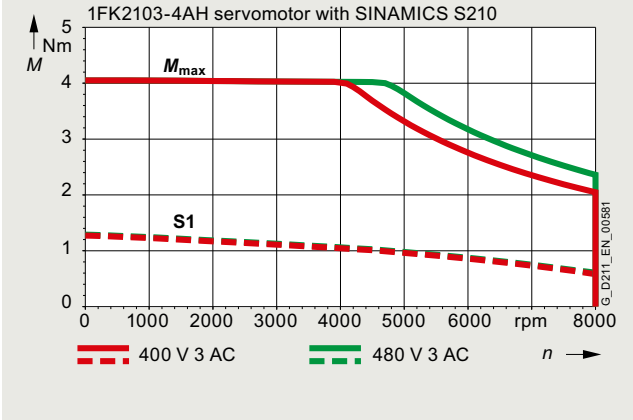

© Siemens 2022

Technical specifications

Compact

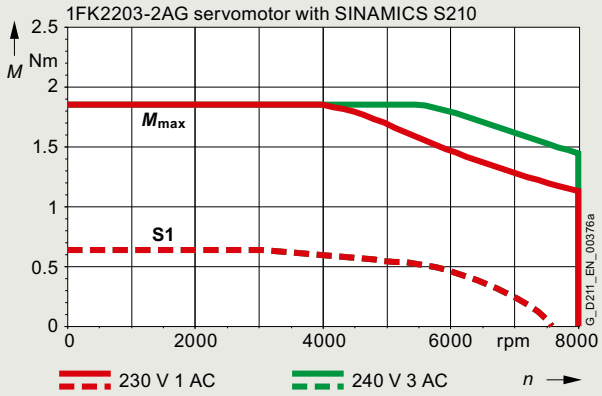

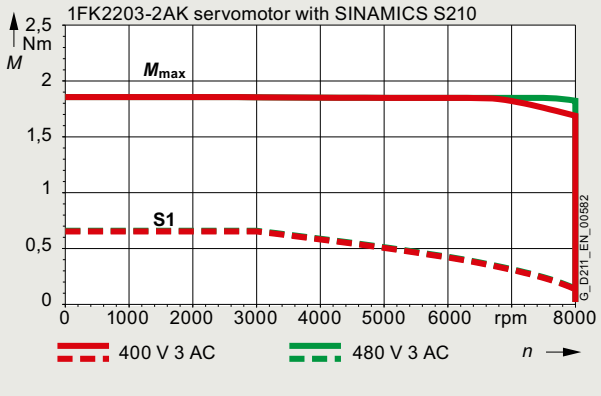

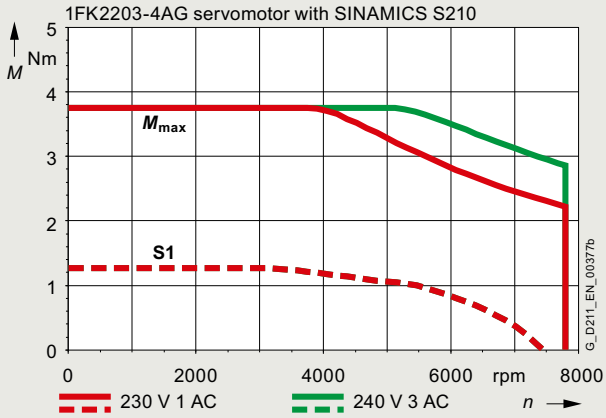

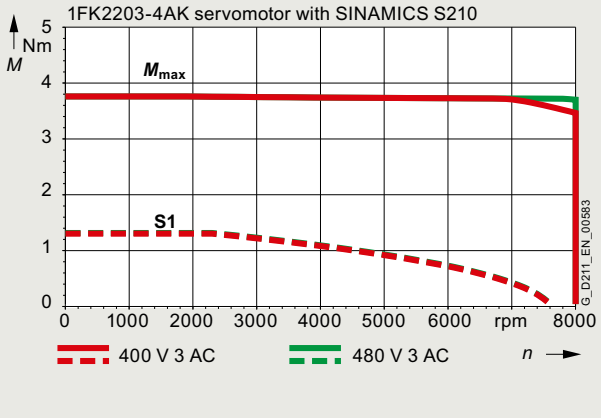

© Siemens 2022

Technical specifications

SIMOTICS S-1FK2 shaft height 40

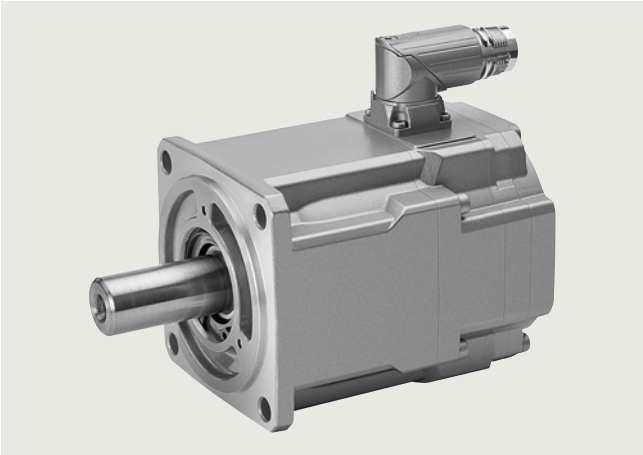

Specific technical specifications

SIMOTICS S-1FK2 servomotors		High Dynamic					Compact		
Shaft height 40		**1FK2104-4AF**	**1FK2104-4AK**	**1FK2104-5AF**	**1FK2104-5AK**	**1FK2104-6AF**	**1FK2204-5AF**	**1FK2204-5AK**	**1FK2204-6AF**
Static torque M_0	Nm (lb_f-ft)	1.27 (0.94)	1.27 (0.94)	2.4 (1.77)	2.4 (1.77)	3.2 (2.36)	2.4 (1.77)	2.4 (1.77)	3.2 (2.36)
Stall current I_0	A	1.19	2.4	2.1	4.4	3	2.25	4.4	3
Maximum torque M_{max}	Nm (lb_f-ft)	3.75 (2.77)	3.85 (2.84)	7.5 (5.53)	7.6 (5.61)	10 (7.38)	7.1 (5.24)	7.1 (5.24)	9.5 (7.01)
Maximum current I_{max}	A	4.2	8.7	7.6	16	10.9	7.1	14.2	9.9
Maximum speed n_{max}	rpm	7200	8000	6700	8000	7200	7500	8000	7600
Rotor moment of inertia J_{Mot}	kg cm^2 (lb_f-in^2)	0.35 (0.120)	0.35 (0.120)	0.56 (0.191)	0.56 (0.191)	0.76 (0.260)	1.2 (0.410)	1.2 (0.410)	1.6 (0.547)
Moment of inertia (with brake) $J_{Mot\ Br}$	kg cm^2 (lb_f-in^2)	0.43 (0.147)	0.43 (0.147)	0.65 (0.222)	0.65 (0.222)	0.84 (0.287)	1.3 (0.444)	1.3 (0.444)	1.7 (0.581)
Weight m_{Mot}	kg (lb)	2.05 (4.52)	2.05 (4.52)	2.85 (6.28)	2.85 (6.28)	3.4 (7.50)	2.9 (6.39)	2.9 (6.39)	3.5 (7.72)
Weight (with brake) $m_{Mot\ Br}$	kg (lb)	2.9 (6.39)	2.9 (6.39)	3.7 (8.16)	3.7 (8.16)	4.25 (9.37)	3.75 (8.27)	3.75 (8.27)	4.4 (9.70)
200 ... 240 V 1 AC / 3 AC									
Rated speed n_N	rpm	1500	3000	1500	3000	1500	1500	3000	1500
Rated torque M_N	Nm (lb_f-ft)	1.27 (0.94)	1.27 (0.94)	2.4 (1.77)	2.4 (1.77)	3.2 (2.36)	2.4 (1.77)	2.4 (1.77)	3.2 (2.36)
Rated current I_N	A	1.19	2.4	2.1	4.4	3	2.25	4.4	3
Rated power P_N	W	200	400	375	750	500	375	750	500
380 ... 480 V 3 AC									
Rated speed n_N	rpm	3000	6000	3000	6000	3000	3000	6000	3000
Rated torque M_N	Nm (lb_f-ft)	1.27 (0.94)	0.95 (0.70)	2.4 (1.77)	1.7 (1.25)	3.2 (2.36)	2.4 (1.77)	0.9 (0.66)	3.2 (2.36)
Rated current I_N	A	1.19	1.88	2.1	3.20	3	2.25	1.95	3
Rated power P_N	W	400	600	750	1070	1000	750	570	1000
Suitable for SINAMICS S210 servo converter									
• 200 ... 240 V 1 AC		6SL3210-5HB10-2UF0	6SL3210-5HB10-4UF0	6SL3210-5HB10-4UF0	6SL3210-5HB10-8UF0	6SL3210-5HB10-8UF0	6SL3210-5HB10-4UF0	6SL3210-5HB10-8UF0	6SL3210-5HB10-8UF0
• 200 ... 240 V 3 AC		6SL3210-5HE10-4UF0	6SL3210-5HE11-0UF0	6SL3210-5HE10-8UF0	6SL3210-5HE11-5UF0	6SL3210-5HE11-0UF0	6SL3210-5HE10-8UF0	6SL3210-5HE11-5UF0	6SL3210-5HE11-0UF0
• 380 ... 480 V 3 AC		6SL3210-5HE10-4UF0	6SL3210-5HE11-0UF0	6SL3210-5HE10-8UF0	6SL3210-5HE11-5UF0	6SL3210-5HE11-0UF0	6SL3210-5HE10-8UF0	6SL3210-5HE11-5UF0	6SL3210-5HE11-0UF0

© Siemens 2022

Technical specifications

Dimensional drawing

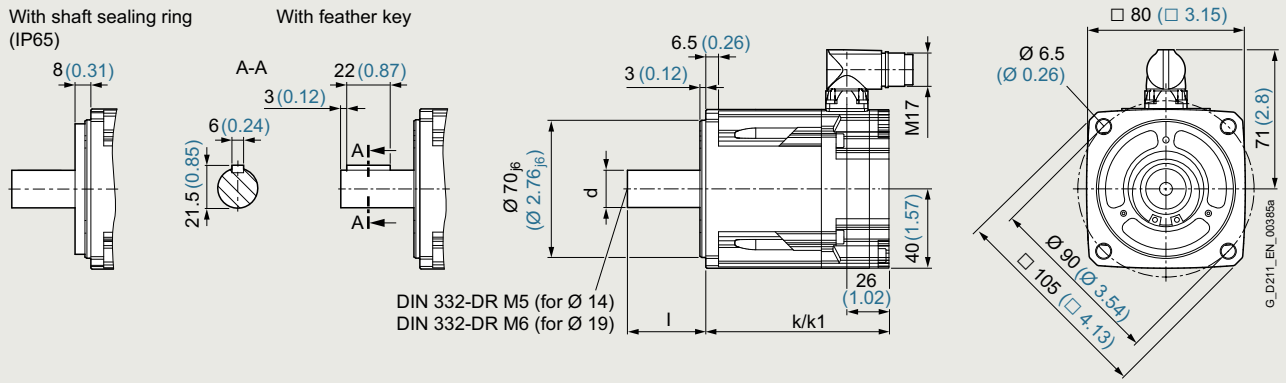

Shaft height 40	Without brake	With brake	With shaft Ø 19 × 40		With plain shaft Ø 14 × 30 (for IP64 only and without feather key)	
DIN	k	k1	d	l	d	l
IEC	LB	LB1	D	L	D	L
1FK2.04-4A...	98 (3.86)	142 (5.59)				
1FK2.04-5A...	126 (4.96)	170 (6.69)	Ø 19_{k6} (Ø 0.75_{k6})	40 (1.57)	Ø 14_{k6} (Ø 0.55_{k6})	30 (1.18)
1FK2.04-6A...	144 (5.67)	188 (7.4)				

All dimensions in mm (values in brackets are in inches).

Speed/torque characteristics

High Dynamic

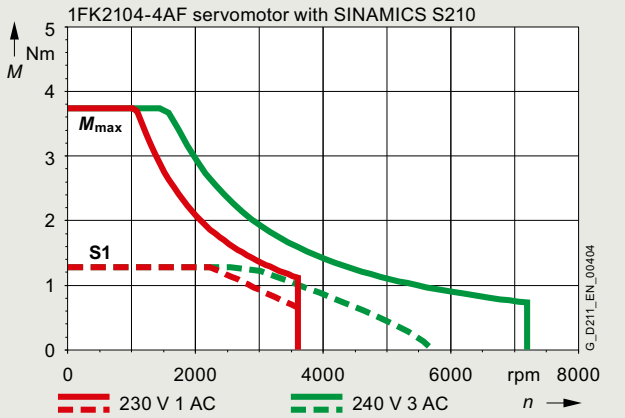

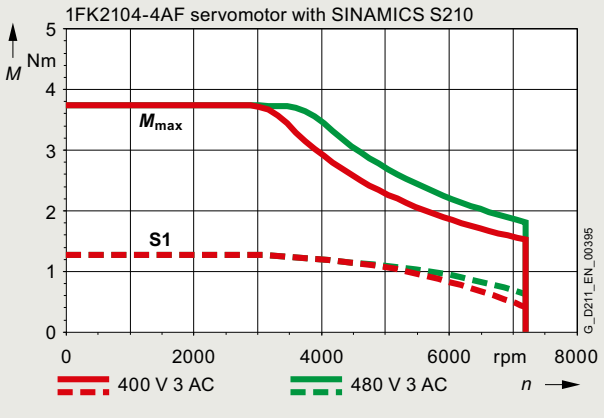

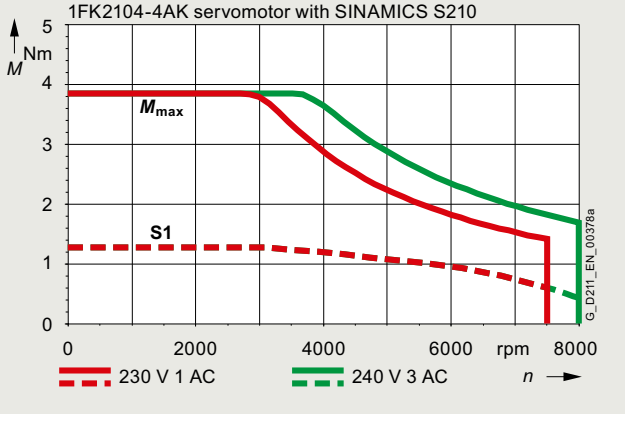

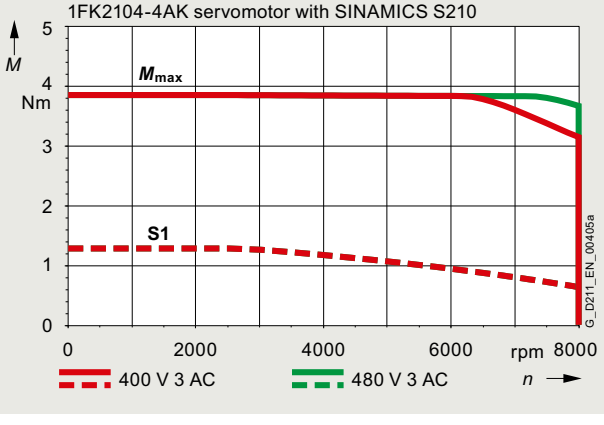

© Siemens 2022

Technical specifications

Speed/torque characteristics (continued)

High Dynamic (continued)

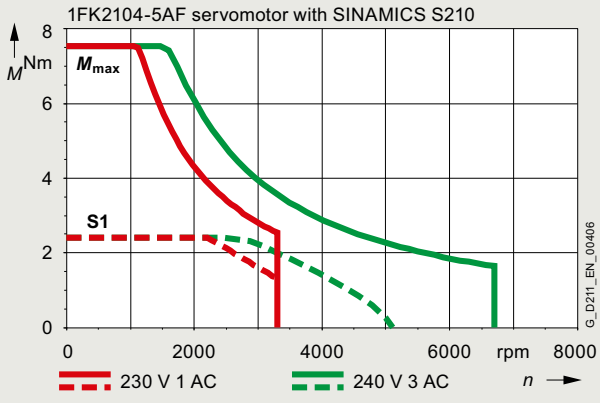

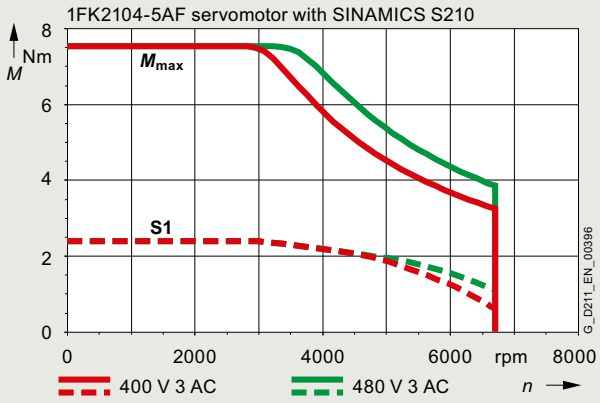

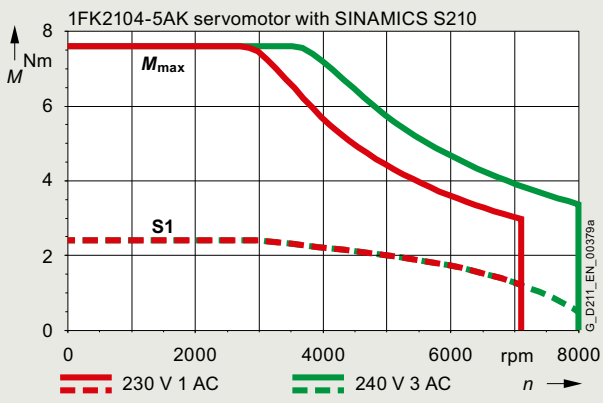

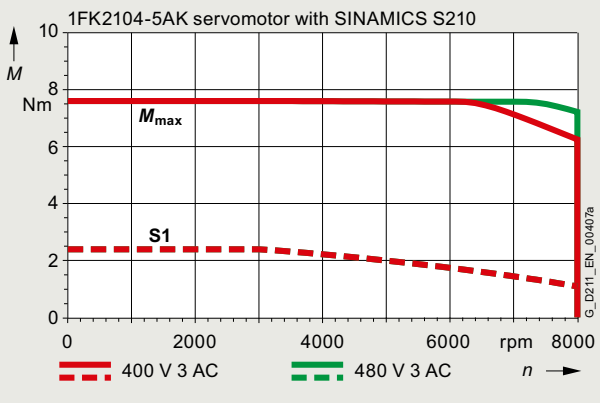

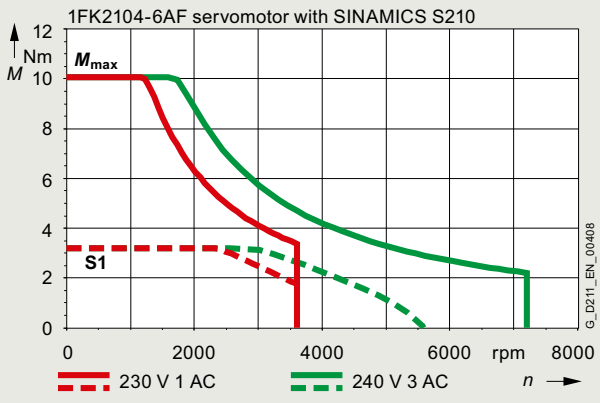

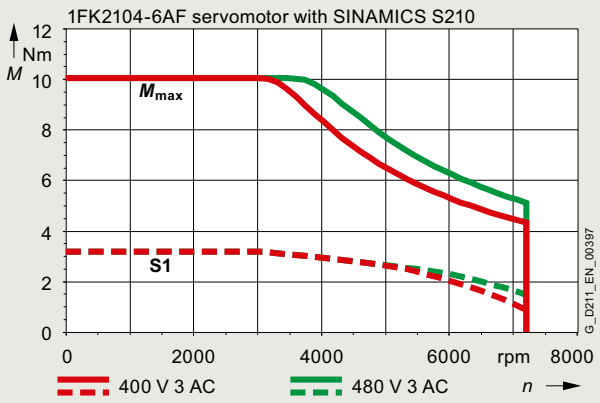

© Siemens 2022

Technical specifications

Speed/torque characteristics (continued)

Compact

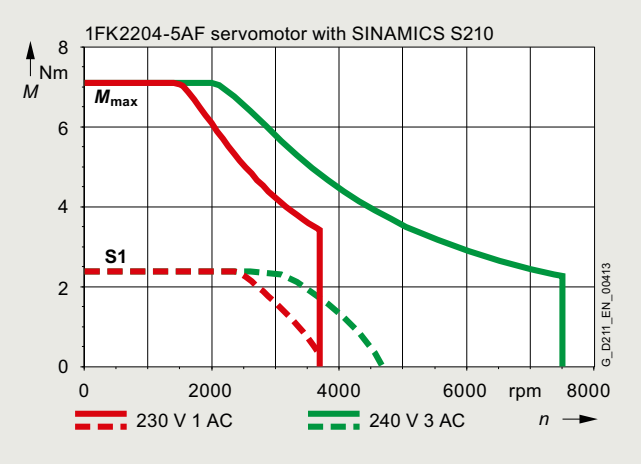

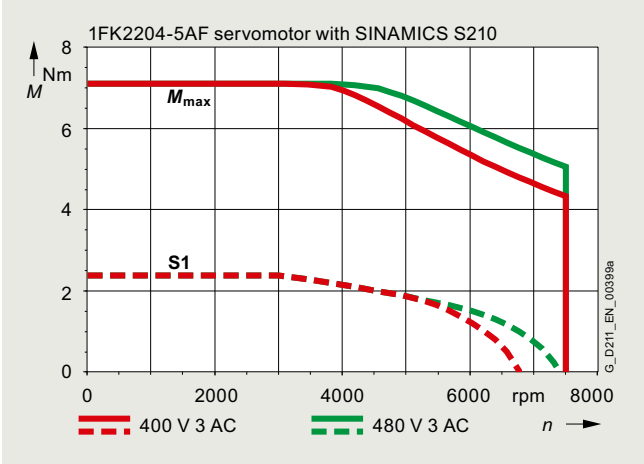

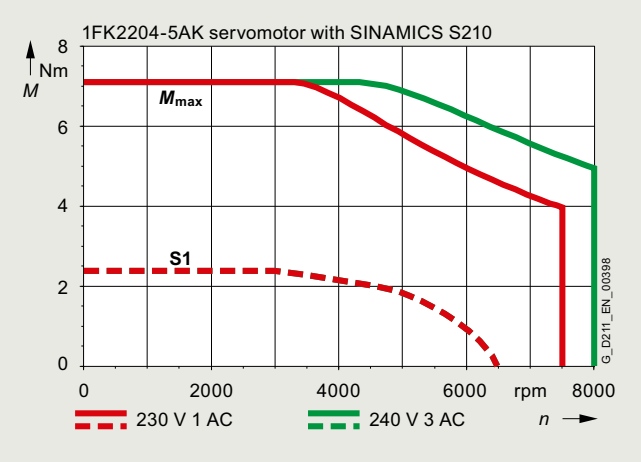

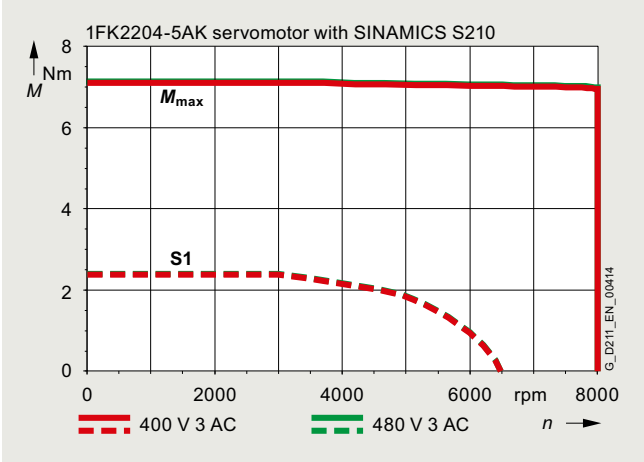

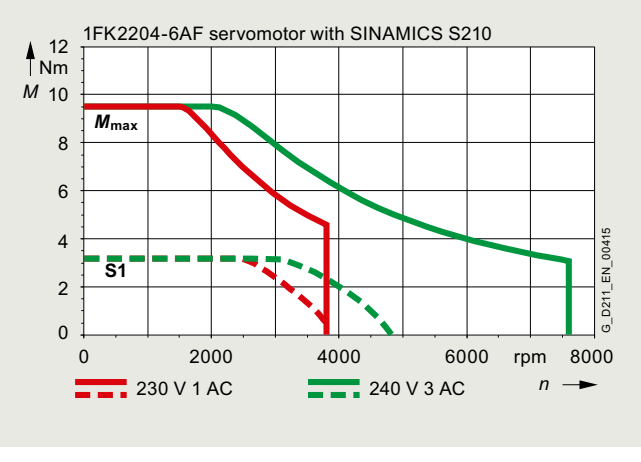

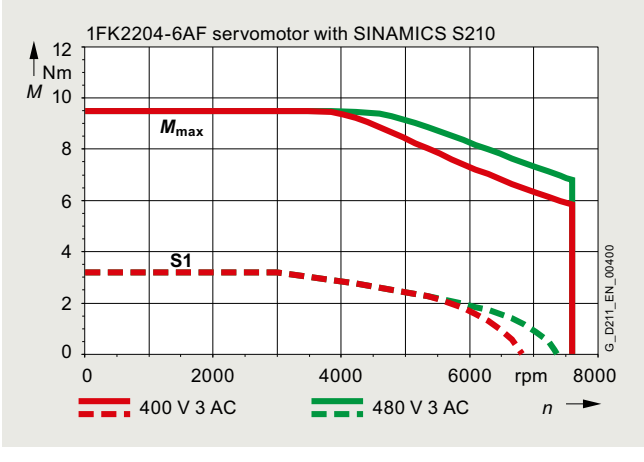

© Siemens 2022

Technical specifications

SIMOTICS S-1FK2 shaft height 48

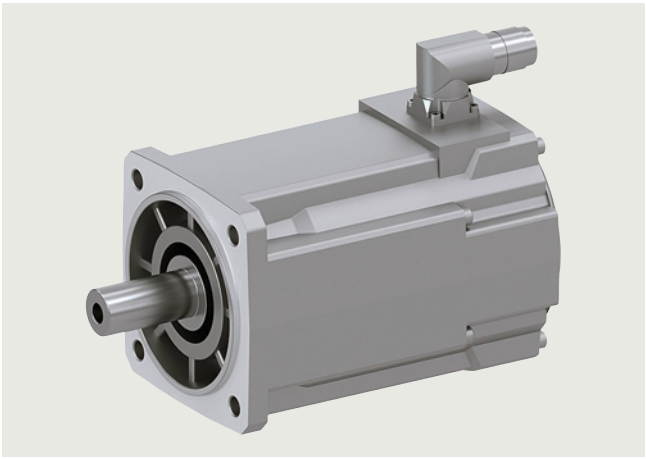

Specific technical specifications

SIMOTICS S-1FK2 servomotors		Compact	
Shaft height 48		**1FK2205-2AF**	**1FK2205-4AF**
Static torque M_0	Nm (lb_f-ft)	3.6 (2.66)	6 (4.43)
Stall current I_0	A	2.9	4.7
Maximum torque M_{max}	Nm (lb_f-ft)	10.8 (7.97)	18 (13.28)
Maximum current I_{max}	A	9.5	15.1
Maximum speed n_{max}	rpm	6000	6000
Rotor moment of inertia J_{Mot}	kg cm^2 (lb_f-in^2)	3.2 (1.093)	5.1 (1.743)
Moment of inertia (with brake) $J_{Mot\ Br}$	kg cm^2 (lb_f-in^2)	4.0 (1.367)	6.0 (2.050)
Weight m_{Mot}	kg (lb)	3.75 (8.27)	5.2 (11.47)
Weight (with brake) $m_{Mot\ Br}$	kg (lb)	4.75 (10.47)	6.2 (13.67)
200 ... 240 V 1 AC / 3 AC			
Rated speed n_N	rpm	1500	1500
Rated torque M_N	Nm (lb_f-ft)	3.4 (2.51)	5.5 (4.06)
Rated current I_N	A	2.8	4.35
Rated power P_N	W	530	860
380 ... 480 V 3 AC			
Rated speed n_N	rpm	3000	3000
Rated torque M_N	Nm (lb_f-ft)	3 (2.21)	4.6 (3.39)
Rated current I_N	A	2.5	3.75
Rated power P_N	W	940	1450
Suitable for SINAMICS S210 servo converter			
• 200 ... 240 V 1 AC		6SL3210-5HB10-8UF0	–
• 200 ... 240 V 3 AC		6SL3210-5HE11-0UF0	6SL3210-5HE11-5UF0
• 380 ... 480 V 3 AC		6SL3210-5HE11-0UF0	6SL3210-5HE11-5UF0

© Siemens 2022

Technical specifications

Dimensional drawing

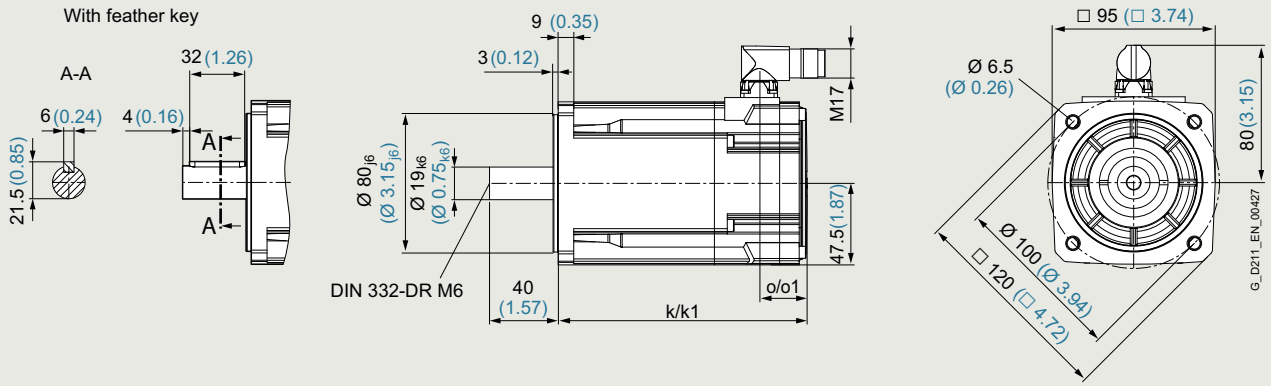

Shaft height 48 DIN IEC	Without brake k LB	With brake k1 LB1	Without brake o –	With brake o1 –
1FK2205-2A…	145 (5.71)	188 (7.4)	28 (1.1)	34 (1.34)
1FK2205-4A…	177 (6.97)	220 (8.66)		

All dimensions in mm (values in brackets are in inches).

Speed/torque characteristics

Compact

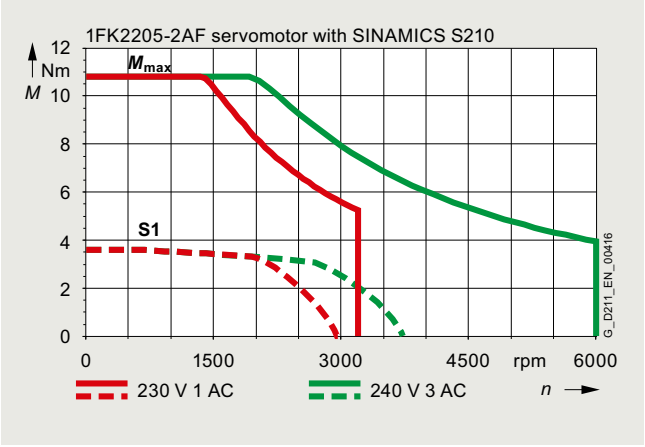

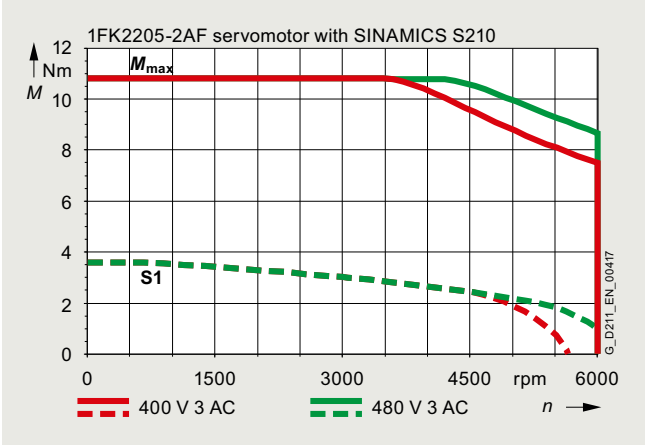

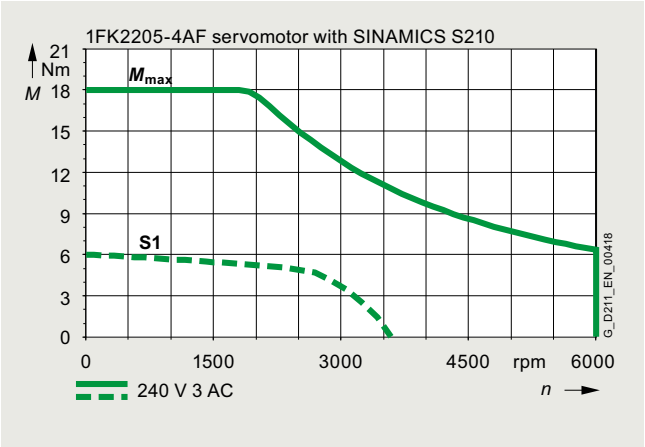

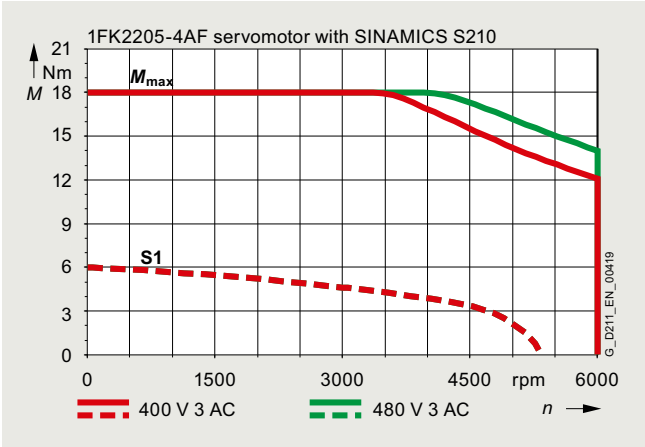

© Siemens 2022

Technical specifications

SIMOTICS S-1FK2 shaft height 52

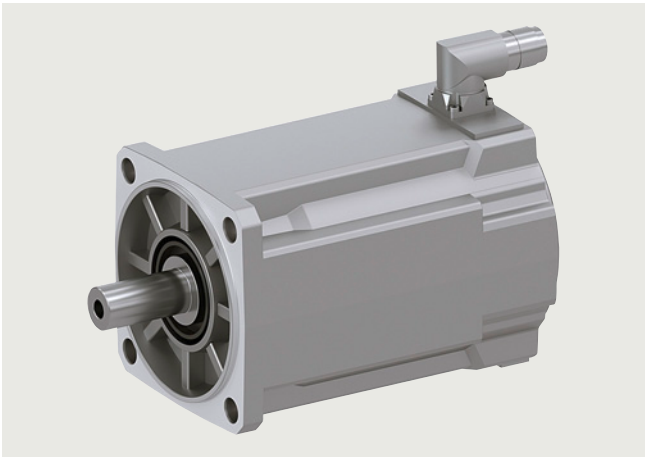

Specific technical specifications

SIMOTICS S-1FK2 servomotors		High Dynamic	
Shaft height 52		**1FK2105-4AF**	**1FK2105-6AF**
Static torque M_0	Nm (lb_f-ft)	5 (3.69)	8 (5.90)
Stall current I_0	A	4.65	6.7
Maximum torque M_{max}	Nm (lb_f-ft)	15 (11.06)	24 (17.70)
Maximum current I_{max}	A	18	24
Maximum speed n_{max}	rpm	6000	6000
Rotor moment of inertia J_{Mot}	kg cm^2 (lb_f-in^2)	1.7 (0.581)	2.7 (0.923)
Moment of inertia (with brake) $J_{Mot\ Br}$	kg cm^2 (lb_f-in^2)	2.6 (0.888)	3.5 (1.196)
Weight m_{Mot}	kg (lb)	5.6 (12.35)	7.7 (16.98)
Weight (with brake) $m_{Mot\ Br}$	kg (lb)	6.6 (14.55)	8.7 (19.18)
200 ... 240 V 3 AC			
Rated speed n_N	rpm	1500	1500
Rated torque M_N	Nm (lb_f-ft)	5 (3.69)	8 (5.90)
Rated current I_N	A	4.65	6.7
Rated power P_N	W	790	1260
380 ... 480 V 3 AC			
Rated speed n_N	rpm	3000	3000
Rated torque M_N	Nm (lb_f-ft)	4.6 (3.39)	6.6 (4.87)
Rated current I_N	A	4.35	5.6
Rated power P_N	W	1450	2100
Suitable for SINAMICS S210 servo converter			
• 200 ... 240 V 3 AC		6SL3210-5HE11-5UF0	6SL3210-5HE12-0UF0
• 380 ... 480 V 3 AC		6SL3210-5HE11-5UF0	6SL3210-5HE12-0UF0

© Siemens 2022

Technical specifications

Dimensional drawing

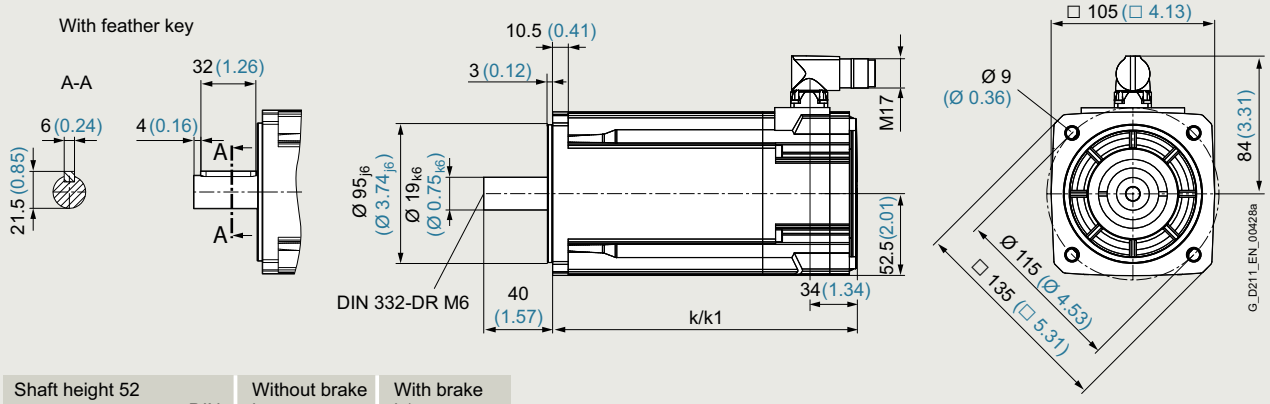

Shaft height 52 DIN IEC	Without brake k LB	With brake k1 LB1
1FK2105-4A...	173 (6.81)	200 (7.87)
1FK2105-6A...	215 (8.46)	242 (9.53)

All dimensions in mm (values in brackets are in inches).

Speed/torque characteristics

High Dynamic

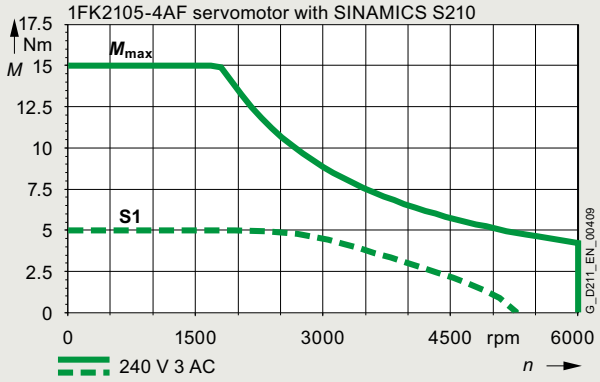

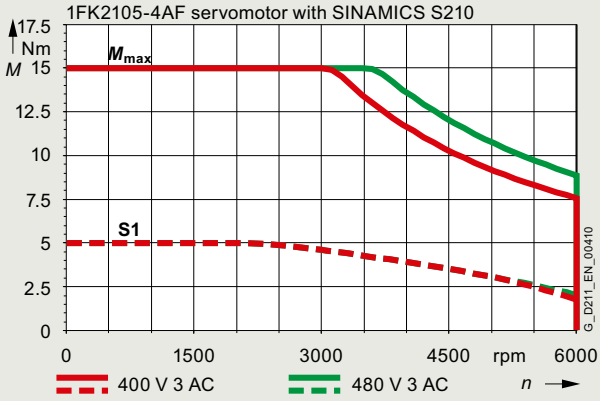

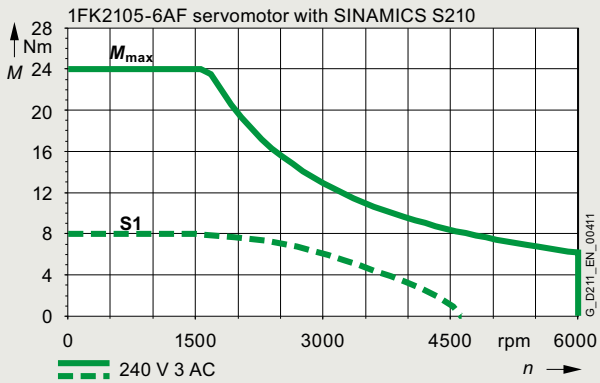

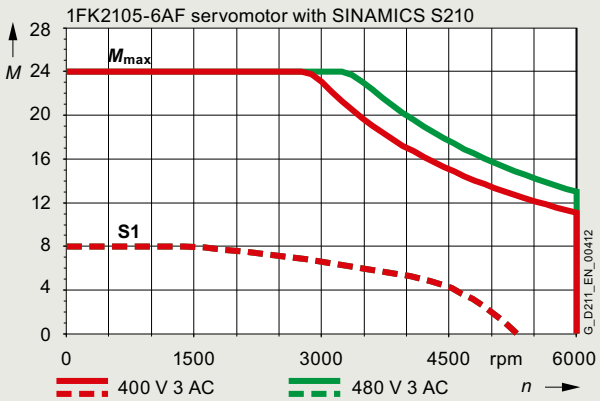

© Siemens 2022

Technical specifications

SIMOTICS S-1FK2 shaft height 63

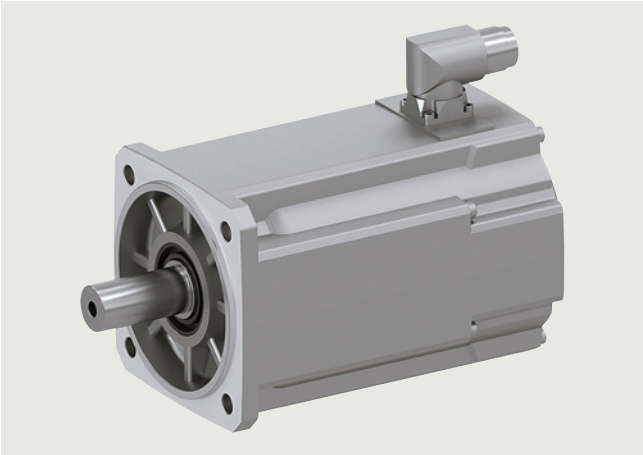

Specific technical specifications

SIMOTICS S-1FK2 servomotors		High Dynamic			Compact	
Shaft height 63		**1FK2106-3AF**	**1FK2106-4AF**	**1FK2106-6AF**	**1FK2206-2AF**	**1FK2206-4AF**
Static torque M_0	Nm (lb_f-ft)	9 (6.64)	12 (8.85)	16 (11.80)	6.5 (4.79)	12 (8.85)
Stall current I_0	A	9.2	10.7	14.3	5	7.9
Maximum torque M_{max}	Nm (lb_f-ft)	26 (19.18)	33 (24.34)	45.5 (33.56)	18 (13.28)	36 (26.55)
Maximum current I_{max}	A	43	42	49	17.8	29.5
Maximum speed n_{max}	rpm	6000	6000	6000	6000	5800
Rotor moment of inertia J_{Mot}	kg cm^2 (lb_f-in^2)	4.6 (1.572)	6.0 (2.050)	8.7 (2.973)	7.8 (2.665)	15 (5.126)
Moment of inertia (with brake) $J_{Mot\ Br}$	kg cm^2 (lb_f-in^2)	6.3 (2.153)	7.6 (2.597)	10 (3.417)	9.4 (3.212)	17 (5.809)
Weight m_{Mot}	kg (lb)	7.4 (16.32)	9 (19.85)	11.8 (26.02)	6.3 (13.89)	8.9 (19.62)
Weight (with brake) $m_{Mot\ Br}$	kg (lb)	9 (19.85)	10.6 (23.37)	13.4 (29.55)	7.9 (17.42)	10.6 (23.37)
200 ... 240 V 3 AC						
Rated speed n_N	rpm	1500	1500	1500	1500	1500
Rated torque M_N	Nm (lb_f-ft)	8.3 (6.12)	10.5 (7.74)	13.8 (10.18)	6.1 (4.50)	10.9 (8.04)
Rated current I_N	A	8.7	9.6	12.5	4.8	7.3
Rated power P_N	W	1300	1640	2150	970	1720
380 ... 480 V 3 AC						
Rated speed n_N	rpm	3000	3000	3000	3000	3000
Rated torque M_N	Nm (lb_f-ft)	7.3 (5.38)	8.6 (6.34)	10.6 (7.82)	5.4 (3.98)	9.1 (6.71)
Rated current I_N	A	7.9	8.1	9.7	4.35	6.2
Rated power P_N	W	2300	2700	3300	1710	2850
Suitable for SINAMICS S210 servo converter						
• 200 ... 240 V 3 AC		6SL3210-5HE15-0UF0	6SL3210-5HE15-0UF0	6SL3210-5HE17-0UF0	6SL3210-5HE11-5UF0	6SL3210-5HE13-5UF0
• 380 ... 480 V 3 AC		6SL3210-5HE15-0UF0	6SL3210-5HE15-0UF0	6SL3210-5HE17-0UF0	6SL3210-5HE11-5UF0	6SL3210-5HE13-5UF0

© Siemens 2022

Technical specifications

Dimensional drawing

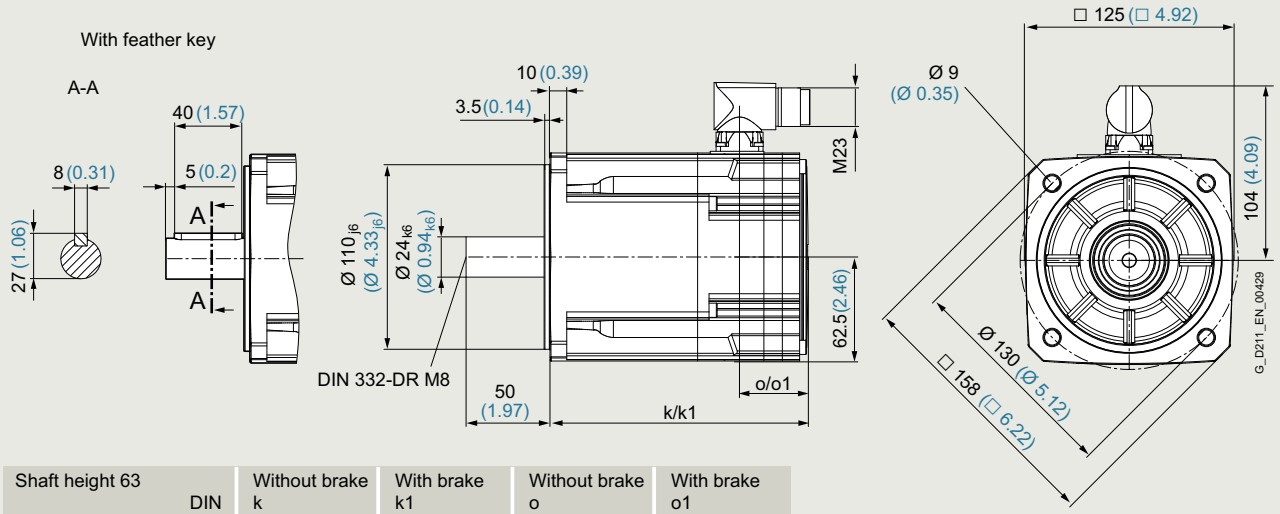

Shaft height 63 DIN IEC	Without brake k LB	With brake k1 LB1	Without brake o –	With brake o1 –
1FK2206-2A…	154 (6.06)	205 (8.07)	41 (1.61)	53 (2.09)
1FK2106-3A…	174 (6.85)	225 (8.86)		
1FK2.06-4A…	193 (7.6)	244 (9.61)		
1FK2106-6A…	232 (9.13)	283 (11.14)		

All dimensions in mm (values in brackets are in inches).

Speed/torque characteristics

High Dynamic

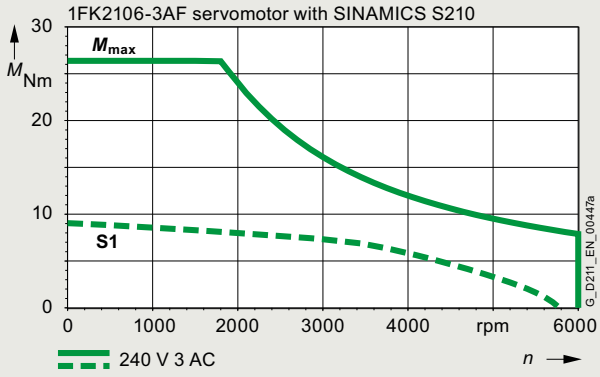

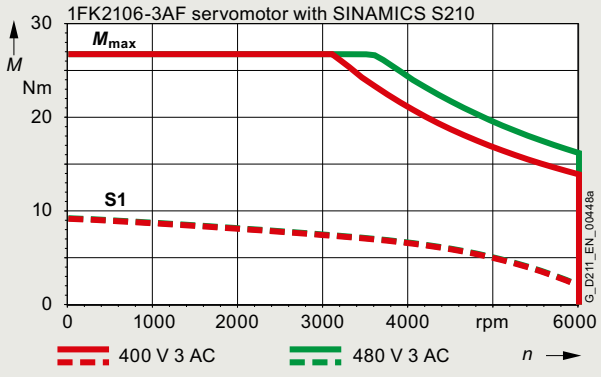

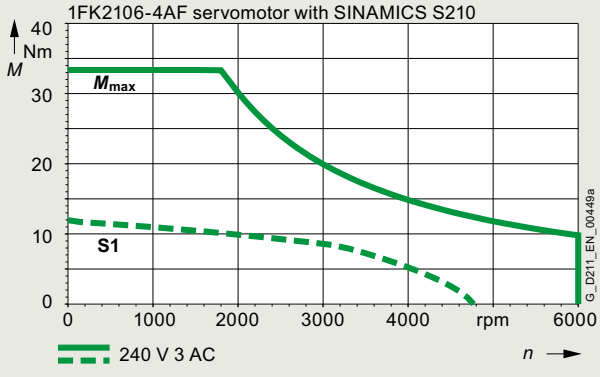

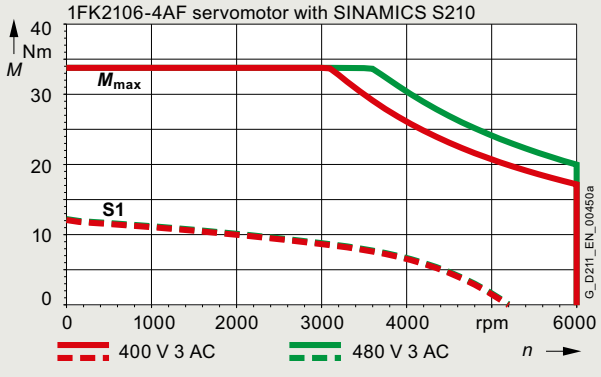

© Siemens 2022

Technical specifications

Speed/torque characteristics (continued)

High Dynamic (continued)

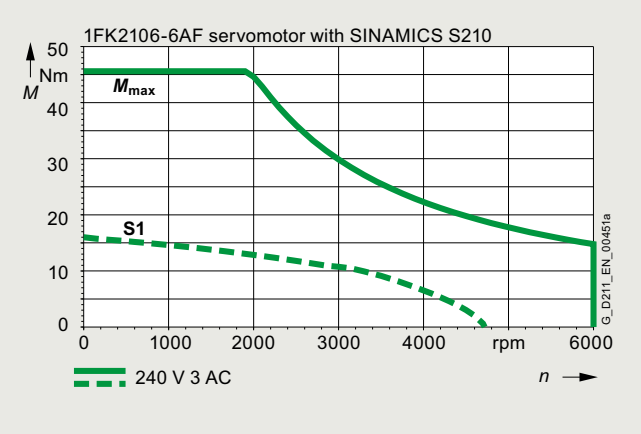

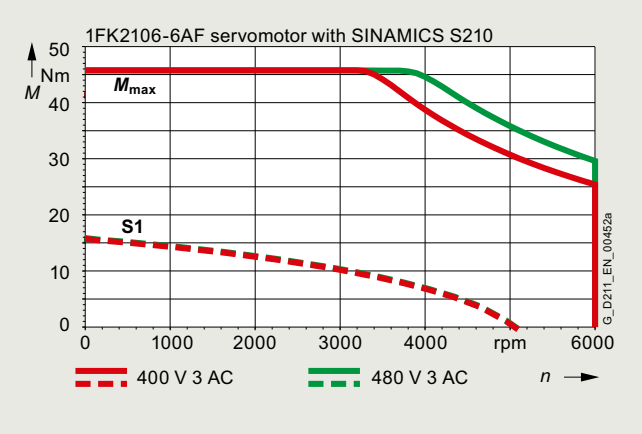

Compact

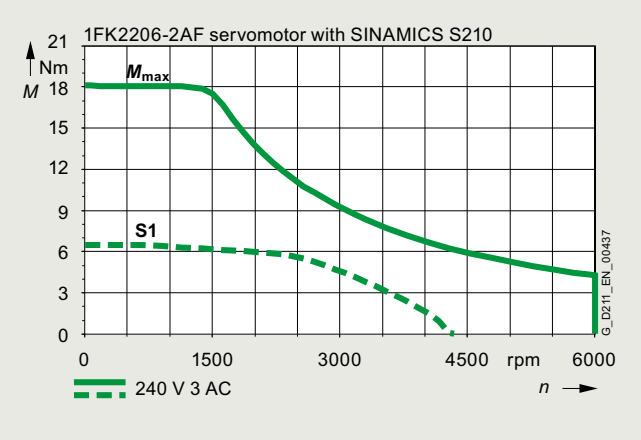

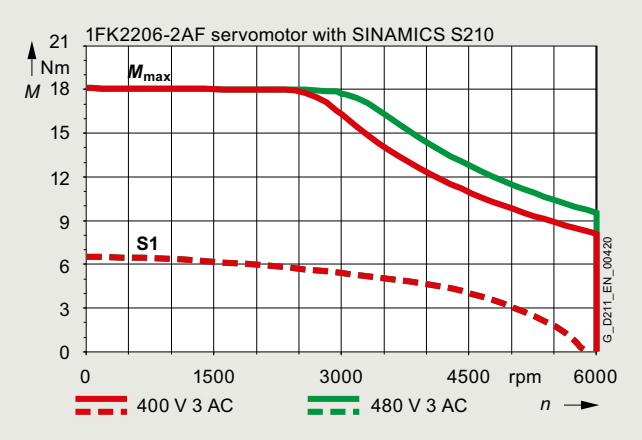

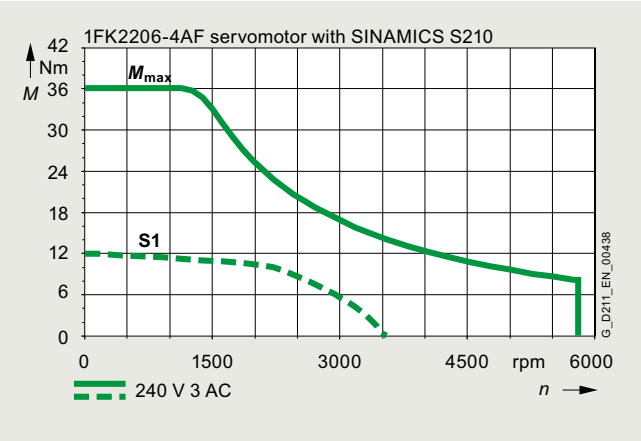

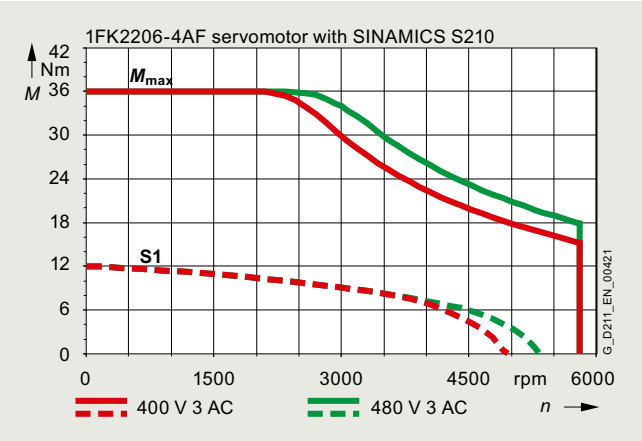

© Siemens 2022

Technical specifications

SIMOTICS S-1FK2 shaft height 80

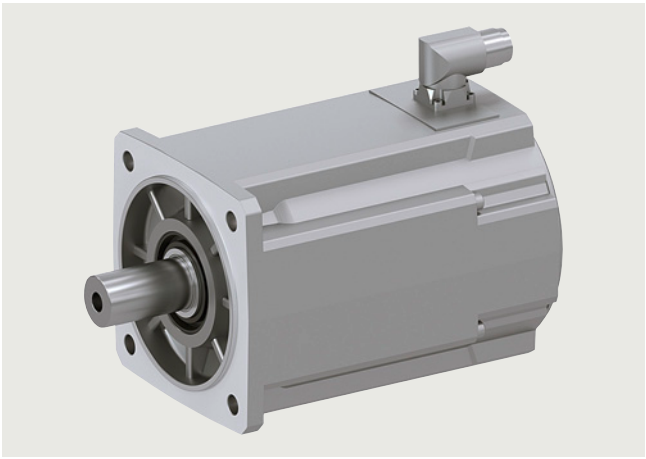

Specific technical specifications

SIMOTICS S-1FK2 servomotors		Compact		
Shaft height 80		**1FK2208-3AC**	**1FK2208-4AC**	**1FK2208-5AC**
Static torque M_0	Nm (lb_f-ft)	18 (13.28)	22 (16.23)	27 (19.92)
Stall current I_0	A	8.4	11.7	14.6
Maximum torque M_{max}	Nm (lb_f-ft)	51 (37.62)	66 (48.68)	80 (59.01)
Maximum current I_{max}	A	29.5	43.5	51.5
Maximum speed n_{max}	rpm	4100	4600	4700
Rotor moment of inertia J_{Mot}	kg cm^2 (lb_f-in^2)	30 (10.251)	39 (13.326)	48 (16.402)
Moment of inertia (with brake) $J_{Mot\ Br}$	kg cm^2 (lb_f-in^2)	33 (11.276)	44 (15.035)	54 (18.452)
Weight m_{Mot}	kg (lb)	12.6 (27.78)	14.6 (32.19)	16.6 (36.60)
Weight (with brake) $m_{Mot\ Br}$	kg (lb)	14.6 (32.19)	17.3 (38.15)	19.3 (42.56)
200 ... 240 V 3 AC				
Rated speed n_N	rpm	1000	1000	1000
Rated torque M_N	Nm (lb_f-ft)	16.6 (12.24)	20 (14.75)	23.5 (17.33)
Rated current I_N	A	7.9	10.9	13.2
Rated power P_N	W	1740	2150	2500
380 ... 480 V 3 AC				
Rated speed n_N	rpm	2000	2000	2000
Rated torque M_N	Nm (lb_f-ft)	14.5 (10.70)	17 (12.54)	19.1 (14.09)
Rated current I_N	A	7	9.3	10.8
Rated power P_N	W	3050	3550	4000
Suitable for SINAMICS S210 servo converter				
• 200 ... 240 V 3 AC		6SL3210-5HE13-5UF0	6SL3210-5HE15-0UF0	6SL3210-5HE17-0UF0
• 380 ... 480 V 3 AC		6SL3210-5HE13-5UF0	6SL3210-5HE15-0UF0	6SL3210-5HE17-0UF0

© Siemens 2022

Technical specifications

Dimensional drawing

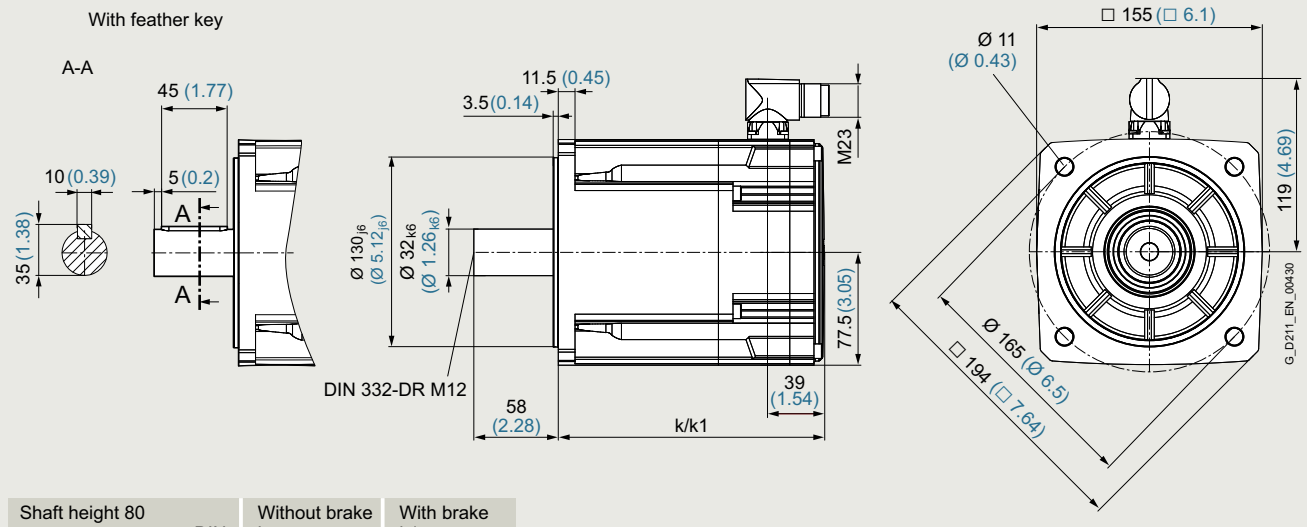

Shaft height 80 DIN IEC	Without brake k LB	With brake k1 LB1
1FK2208-3A…	183 (7.2)	236 (9.29)
1FK2208-4A…	203 (7.99)	256 (10.08)
1FK2208-5A…	223 (8.78)	276 (10.87)

All dimensions in mm (values in brackets are in inches).

© Siemens 2022

Technical specifications

Speed/torque characteristics

Compact

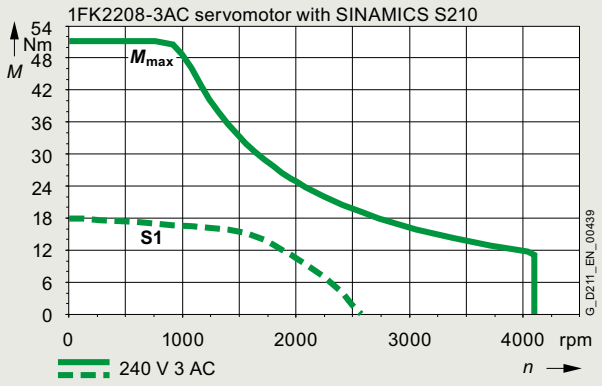

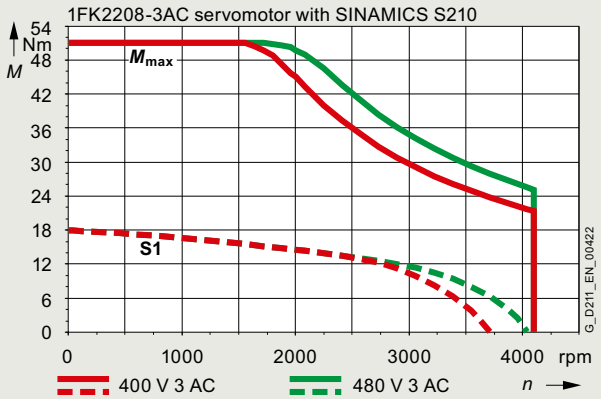

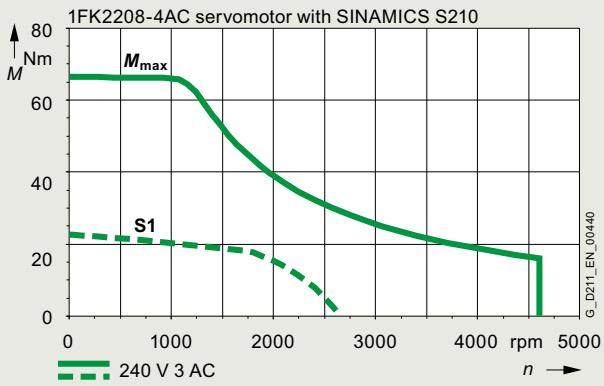

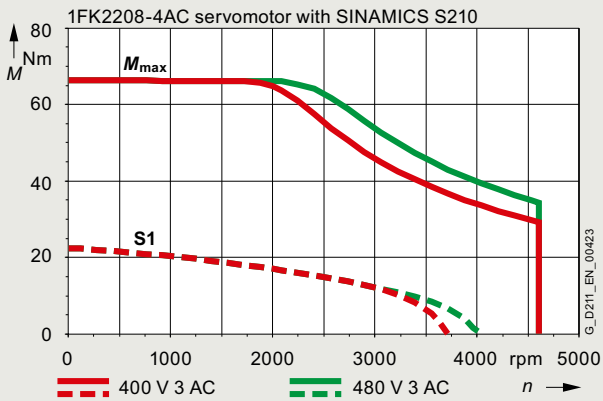

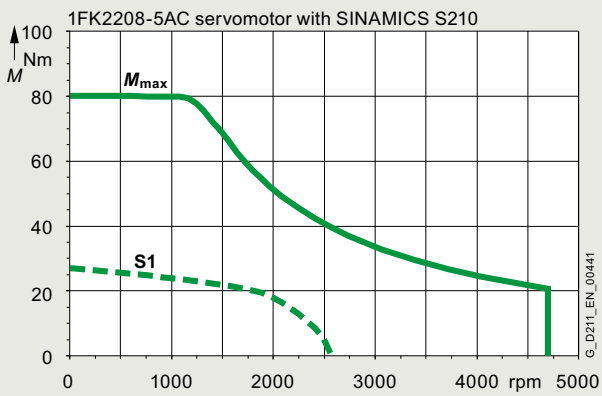

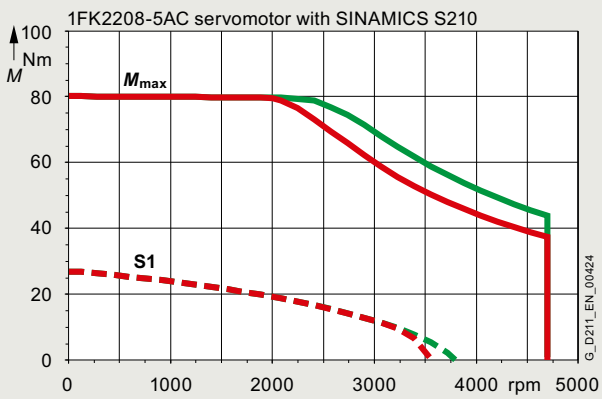

© Siemens 2022

Technical specifications

SIMOTICS S-1FK2 shaft height 100

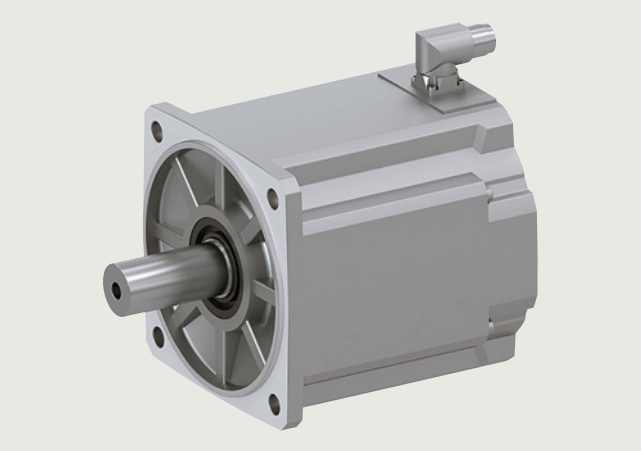

Specific technical specifications

SIMOTICS S-1FK2 servomotors		Compact			
Shaft height 100		**1FK2210-3AB**	**1FK2210-3AC**	**1FK2210-4AB**	**1FK2210-4AC**
Static torque M_0	Nm (lb_f-ft)	30 (22.13)	30 (22.13)	40 (29.50)	40 (29.50)
Stall current I_0	A	8.5	15	11.8	15
Maximum torque M_{max}	Nm (lb_f-ft)	90 (66.38)	90 (66.38)	120 (88.51)	120 (88.51)
Maximum current I_{max}	A	31.5	55	43.5	55
Maximum speed n_{max}	rpm	2500	4400	2500	3300
Rotor moment of inertia J_{Mot}	kg cm^2 (lb_f-in^2)	89 (30.411)	89 (30.411)	120 (41.004)	120 (41.004)
Moment of inertia (with brake) $J_{Mot\ Br}$	kg cm^2 (lb_f-in^2)	95 (32.462)	95 (32.462)	130 (44.421)	130 (44.421)
Weight m_{Mot}	kg (lb)	22 (48.51)	22 (48.51)	27 (59.54)	27 (59.54)
Weight (with brake) $m_{Mot\ Br}$	kg (lb)	25 (55.13)	25 (55.13)	31 (68.36)	31 (68.36)
200 ... 240 V 3 AC					
Rated speed n_N	rpm	750	1000	750	1000
Rated torque M_N	Nm (lb_f-ft)	30 (22.13)	30 (22.13)	39 (28.77)	37 (27.29)
Rated current I_N	A	8.6	15.5	11.6	14.3
Rated power P_N	W	2500	3200	3050	3900
380 ... 480 V 3 AC					
Rated speed n_N	rpm	1500	2000	1500	2000
Rated torque M_N	Nm (lb_f-ft)	28.5 (21.02)	26 (19.18)	34.5 (25.45)	30.5 (22.50)
Rated current I_N	A	8.3	13.5	10.4	11.8
Rated power P_N	W	4500	5500	5400	6400
Suitable for SINAMICS S210 servo converter					
• 200 ... 240 V 3 AC		6SL3210-5HE13-5UF0	6SL3210-5HE17-0UF0	6SL3210-5HE15-0UF0	6SL3210-5HE17-0UF0
• 380 ... 480 V 3 AC		6SL3210-5HE13-5UF0	6SL3210-5HE17-0UF0	6SL3210-5HE15-0UF0	6SL3210-5HE17-0UF0

© Siemens 2022

Technical specifications

Dimensional drawing

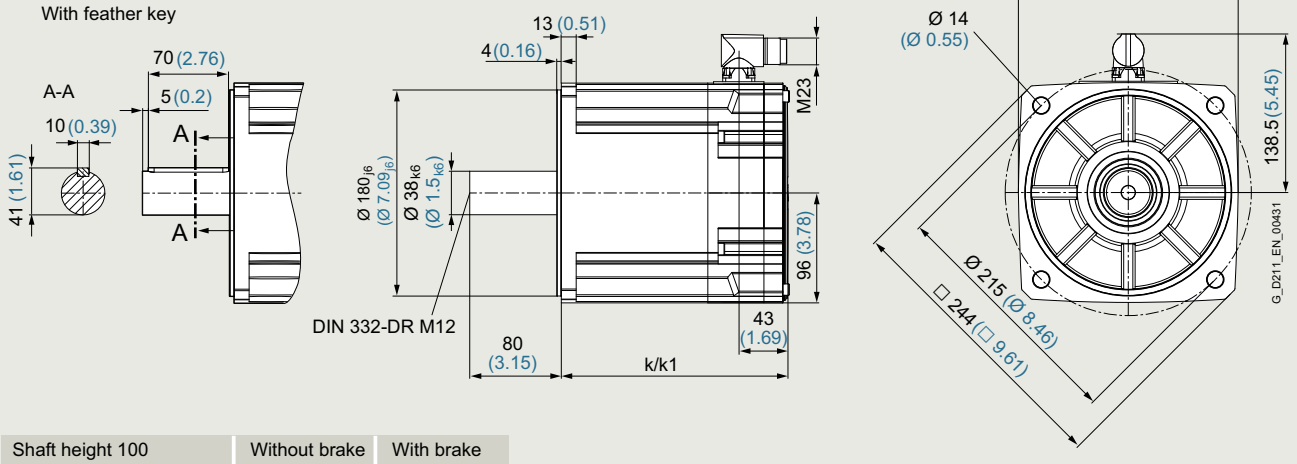

Shaft height 100 DIN IEC	Without brake k LB	With brake k1 LB1
1FK2210-3A…	198 (7.8)	257 (10.12)
1FK2210-4A…	223 (8.78)	282 (11.1)

All dimensions in mm (values in brackets are in inches).

© Siemens 2022

Technical specifications

Speed/torque characteristics

Compact

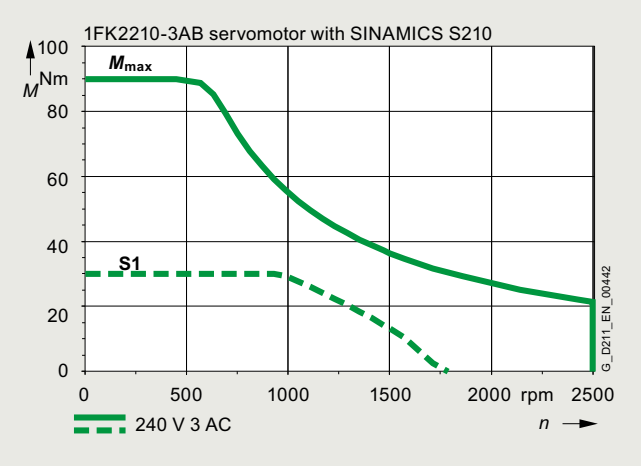

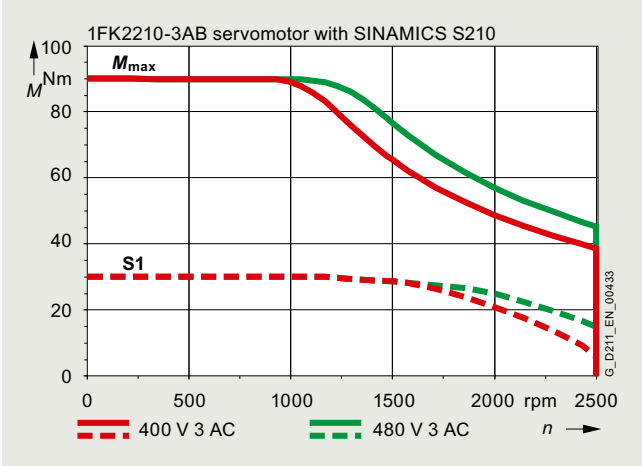

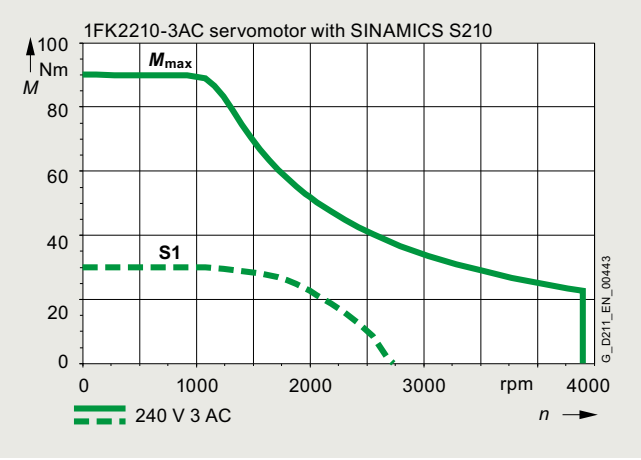

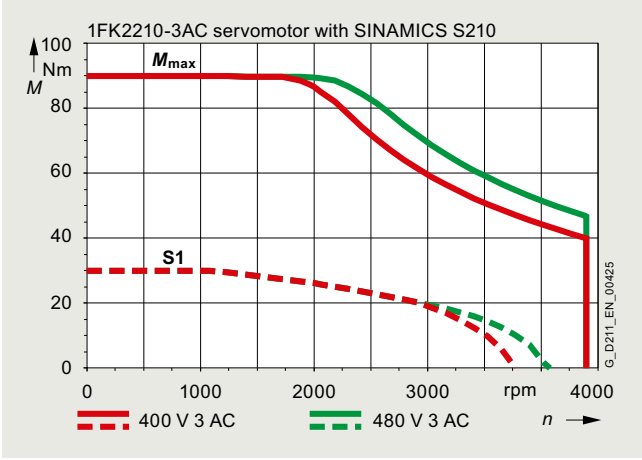

© Siemens 2022

Technical specifications

Speed/torque characteristics (continued)

Compact (continued)

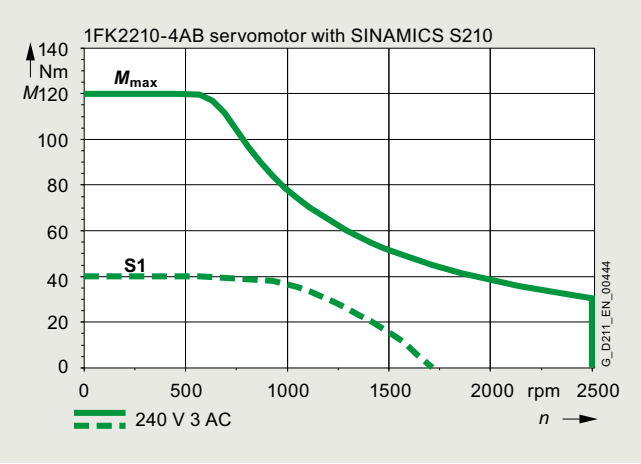

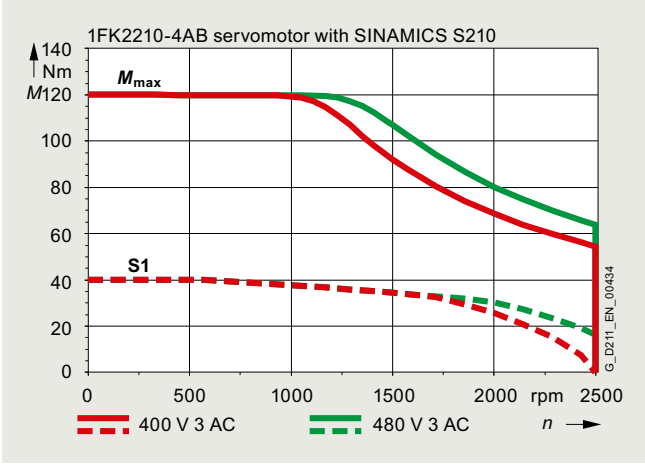

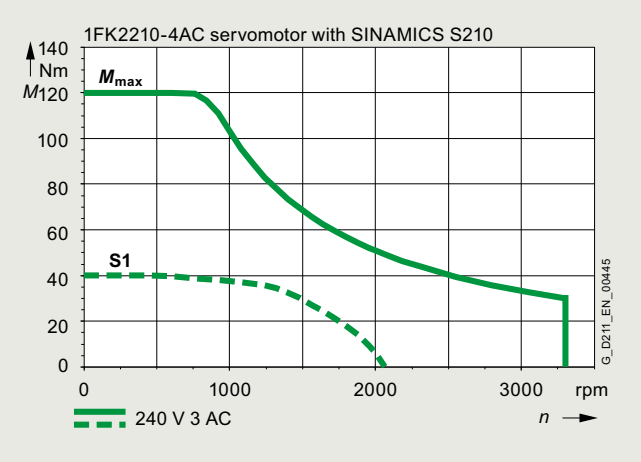

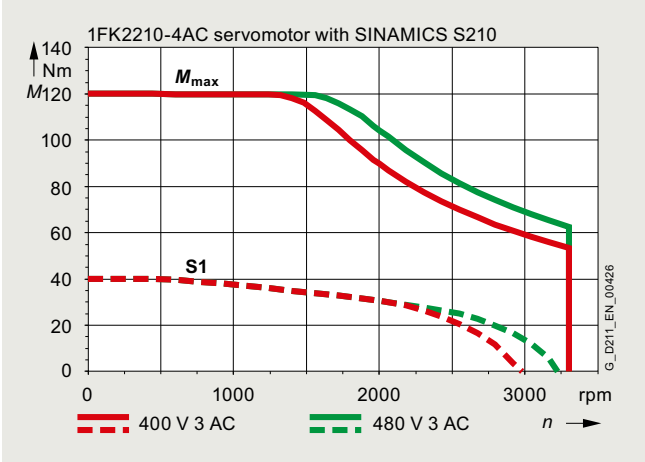

© Siemens 2022

Notes

© Siemens 2022

SIMOTICS S-1FT2 servomotors for SINAMICS S210

3.2/2 Overview
3.2/2 Benefits
3.2/2 Application
3.2/3 Selection and ordering data
3.2/6 Options
3.2/7 Technical specifications
3.2/7 General technical specifications
3.2/12 Shaft height 20
3.2/14 Shaft height 30
3.2/17 Shaft height 40
3.2/21 Shaft height 48
3.2/24 Shaft height 52
3.2/27 Shaft height 63
3.2/31 Shaft height 80
3.2/35 Shaft height 100

Detailed technical information on the SINAMICS S210 servo drive system is available on the internet at:
www.siemens.com/sinamics-s210/documentation

In addition, the Drive Technology Configurator (DT Configurator) can be used on the internet at the following address:
www.siemens.com/sinamics-s210/configuration

© Siemens 2022

Overview

The SIMOTICS S-1FT2 servomotors are compact and highly dynamic synchronous motors for a wide range of uses in an industrial environment. They are characterized by high power density, degree of protection and overload capability.

SIMOTICS S-1FT2 High Dynamic motors

Highest dynamic response through low inertia for highly dynamic applications with low moved masses.

SIMOTICS S-1FT2 Compact motors

Precise, stable control with medium to high masses to be moved with medium moment of inertia.

Benefits

The SIMOTICS S-1FT2 servomotors fully exploit their strengths in the system with the SINAMICS S210 converter:

- Short adjustment and positioning times
- Quick and precise compensation of disturbances
- Stable closed loop control with high dynamic response
- Highest flexibility during selection
- More rugged
- Best accuracy

This is achieved by:

- Rapid control cycle
- High pulse frequency
- Complex rule algorithms
- Highest resolution optical encoder
- Low moment of inertia of the motors
- High overload capability

Application

- Packaging machines
- Handling equipment
- Feed and withdrawal devices
- Stacking units
- Automatic assembly machines
- Laboratory automation
- Woodworking, glass and ceramic industries
- Digital printing machines

© Siemens 2022

Selection and ordering data

	Static torque M_0 Nm (lb_f-ft)	Maximum torque M_{max} Nm (lb_f-ft)	Maximum speed n_{max} rpm	Rated speed for 200 ... 240 V 1/3 AC n_N rpm	Rated speed for 380 ... 480 V 3 AC n_N rpm	Rotor moment of inertia J_{Mot} kg cm^2 (lb_f-in^2)	**SIMOTICS S-1FT2 servomotor** Article No.
High Dynamic for highly dynamic applications							
Shaft height 20							
	0.16 (0.12)	0.56 (0.41)	8000	3000	–	0.025 (0.009)	**1FT2102-0AG■■-■■A0**
	0.32 (0.24)	1.11 (0.82)	8000	3000	–	0.036 (0.012)	**1FT2102-1AG■■-■■A0**
Shaft height 30							
	0.64 (0.47)	1.95 (1.44)	8000	3000	–	0.093 (0.032)	**1FT2103-2AG■■-■■A0**
	0.64 (0.47)	1.95 (1.44)	8000	–	4500	0.093 (0.032) NEW	**1FT2103-2AH■■-■■A0**
	1.27 (0.94)	4.05 (2.99)	8000	3000	–	0.14 (0.048)	**1FT2103-4AG■■-■■A0**
	1.27 (0.94)	4.05 (2.99)	8000	–	4500	0.14 (0.048) NEW	**1FT2103-4AH■■-■■A0**
Shaft height 40							
	1.27 (0.94)	3.75 (2.77)	7200	1500	3000	0.35 (0.120)	**1FT2104-4AF■■-■■A0**
	1.27 (0.94)	3.85 (2.84)	8000	3000	6000	0.35 (0.120)	**1FT2104-4AK■■-■■A0**
	2.4 (1.77)	7.5 (5.53)	6700	1500	3000	0.56 (0.191)	**1FT2104-5AF■■-■■A0**
	2.4 (1.77)	7.6 (5.61)	8000	3000	6000	0.56 (0.191)	**1FT2104-5AK■■-■■A0**
	3.2 (2.36)	10 (7.38)	7200	1500	3000	0.76 (0.260)	**1FT2104-6AF■■-■■A0**
Shaft height 52							
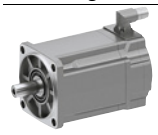	5 (3.69)	15 (11.06)	7400	1500	3000	1.7 (0.581)	**1FT2105-4AF■■-■■A0**
	5 (3.69)	15 (11.06)	9000	2500	4500	1.7 (0.581)	**1FT2105-4AH■■-■■A0**
	8 (5.90)	24 (17.70)	6600	1500	3000	2.7 (0.923)	**1FT2105-6AF■■-■■A0**
Shaft height 63							
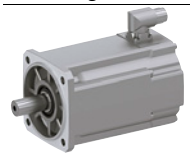	9 (6.64)	26 (19.18)	8000	1500	3000	4.6 (1.572)	**1FT2106-3AF■■-■■A0**
	12 (8.85)	33 (24.34)	7800	1500	3000	6.0 (2.050)	**1FT2106-4AF■■-■■A0**
	16 (11.80)	45.5 (33.56)	7600	1500	3000	8.7 (2.973)	**1FT2106-6AF■■-■■A0**

Article No. supplements			
Holding brake			
Without brake	**0**		
With brake	**1**		
Degree of protection			
IP64 (without shaft sealing ring)		**0**	
IP65 (with shaft sealing ring)		**1**	
IP67 (with shaft sealing ring and spring lock washer) [1]		**2**	
Shaft extension, feather key			
Plain shaft			**0**
Shaft with feather key			**1**
Plain shaft, reduced shaft diameter Ø11 × 23 mm (0.43 × 0.91 in) (only for 1FT2.03 and IP64), Ø14 × 30 mm (0.55 × 1.18 in) (only for 1FT2.04 and IP64)	**0**		**2**
Encoder			
Absolute encoder 22-bit singleturn			**S**
Absolute encoder 22-bit + 12-bit multiturn			**M**
Absolute encoder 26-bit singleturn			**B**
Absolute encoder 26-bit + 12-bit multiturn			**C**

[1] Not available in shaft height 20.

© Siemens 2022

Selection and ordering data

	Static torque M_0 Nm (lb_f-ft)	Maximum torque M_{max} Nm (lb_f-ft)	Maximum speed n_{max} rpm	Rated speed for 200 ... 240 V 1/3 AC n_N rpm	Rated speed for 380 ... 480 V 3 AC n_N rpm	Rotor moment of inertia J_{Mot} kg cm² (lb_f-in²)	SIMOTICS S-1FT2 servomotor Article No.
Compact for high precision applications							
Shaft height 30							
	0.64 (0.47)	1.85 (1.36)	8000	3000	–	0.20 (0.068)	**1FT2203-2AG■■-■■A0**
	0.64 (0.47)	1.85 (1.36)	8000	–	6000	0.20 (0.068) NEW	**1FT2203-2AK■■-■■A0**
	1.27 (0.94)	3.75 (2.77)	8000	3000	–	0.35 (0.120)	**1FT2203-4AG■■-■■A0**
	1.27 (0.94)	3.75 (2.77)	8000	–	6000	0.35 (0.120) NEW	**1FT2203-4AK■■-■■A0**
Shaft height 40							
	2.4 (1.77)	7.1 (5.24)	7500	1500	3000	1.2 (0.410)	**1FT2204-5AF■■-■■A0**
	2.4 (1.77)	7.1 (5.24)	8000	3000	6000	1.2 (0.410)	**1FT2204-5AK■■-■■A0**
	3.2 (2.36)	9.5 (7.01)	7600	1500	3000	1.6 (0.547)	**1FT2204-6AF■■-■■A0**
Shaft height 48							
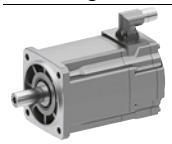	3.6 (2.66)	10.8 (7.97)	6500	1500	3000	3.2 (1.093)	**1FT2205-2AF■■-■■A0**
	3.6 (2.66)	10.8 (7.97)	8300	2500	4500	3.2 (1.093)	**1FT2205-2AH■■-■■A0**
	6 (4.43)	18 (13.28)	6200	1500	3000	5.1 (1.743)	**1FT2205-4AF■■-■■A0**
Shaft height 63							
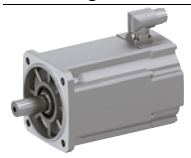	6.5 (4.79)	18 (13.28)	6800	1500	3000	7.8 (2.665)	**1FT2206-2AF■■-■■A0**
	6.5 (4.79)	18 (13.28)	8000	2500	4500	7.8 (2.665)	**1FT2206-2AH■■-■■A0**
	12 (8.85)	36 (26.55)	5800	1500	3000	15 (5.126)	**1FT2206-4AF■■-■■A0**
	12 (8.85)	36 (26.55)	8000	2500	4500	15 (5.126)	**1FT2206-4AH■■-■■A0**
Shaft height 80							
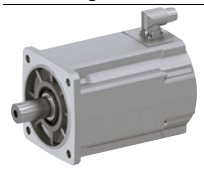	18 (13.28)	51 (37.62)	4100	1000	2000	30 (10.251)	**1FT2208-3AC■■-■■A0**
	18 (13.28)	51 (37.62)	5600	1500	3000	30 (10.251)	**1FT2208-3AF■■-■■A0**
	22 (16.23)	66 (48.68)	4600	1000	2000	39 (13.326)	**1FT2208-4AC■■-■■A0**
	22 (16.23)	66 (48.68)	5900	1500	3000	39 (13.326)	**1FT2208-4AF■■-■■A0**
	27 (19.92)	80 (59.01)	4700	1000	2000	48 (16.402)	**1FT2208-5AC■■-■■A0**
Shaft height 100							
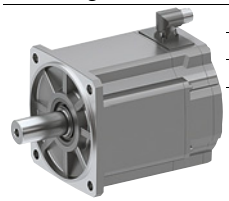	30 (22.13)	90 (66.38)	2500	750	1500	89 (30.411)	**1FT2210-3AB■■-■■A0**
	30 (22.13)	90 (66.38)	4400	1000	2000	89 (30.411)	**1FT2210-3AC■■-■■A0**
	40 (29.50)	120 (88.51)	2500	750	1500	120 (41.004)	**1FT2210-4AB■■-■■A0**
	40 (29.50)	120 (88.51)	3300	1000	2000	120 (41.004)	**1FT2210-4AC■■-■■A0**

Article No. supplements			
Holding brake			
Without brake	**0**		
With brake	**1**		
Degree of protection			
IP64 (without shaft sealing ring)		**0**	
IP65 (with shaft sealing ring)		**1**	
IP67 (with shaft sealing ring and spring lock washer) [1]		**2**	
Shaft extension, feather key			
Plain shaft			**0**
Shaft with feather key			**1**
Plain shaft, reduced shaft diameter Ø11 × 23 mm (0.43 × 0.91 in) (only for 1FT2.03 and IP64), Ø14 × 30 mm (0.55 × 1.18 in) (only for 1FT2.04 and IP64)	**0**		**2**
Encoder			
Absolute encoder 22-bit singleturn			**S**
Absolute encoder 22-bit + 12-bit multiturn			**M**
Absolute encoder 26-bit singleturn			**B**
Absolute encoder 26-bit + 12-bit multiturn			**C**

[1] Not available in shaft height 20.

© Siemens 2022

Selection and ordering data

Accessories

Description	For motor	Article No.
Shaft sealing ring	1FT2102	**1FY2902-0GC00**
To achieve degree of protection IP65	1FT2.03	**1FY2903-0GC00**
Degree of protection kit for mounting on the motor for retrofitting or as spare part	1FT2.04	**1FY2904-0GC00**

Structure of the Article No. of the SIMOTICS S-1FT2 servomotors

Data position in Article No.	1	2	3	4	5	6	7		8	9	10	11	12		13	14	15	16
	1	**F**	**T**	**2**	■	■	■	-	■	**A**	■	■	■	-	■	■	**A**	■
1st to 4th positions: digit, letter, letter, digit — **Motor**	1	F	T	2														
5th position: digit — **Moment of inertia**																		
High Dynamic					1													
Compact					2													
6th and 7th positions: digit, digit — **Shaft height**																		
20						0	2											
30						0	3											
40						0	4											
52					1	0	5											
48					2	0	5											
63						0	6											
80						0	8											
100						1	0											
8th position: digit — **Overall length**																		
See specific technical specifications									0 ... 8									
9th position: letter — Reserved										A								
10th position: letter — **Winding/rated speed**																		
For converters connected to max. 240 V / **For converters connected to max. 480 V**																		
750 rpm at 230 V / 1500 rpm at 400 V											B							
1000 rpm at 230 V / 2000 rpm at 400 V											C							
1500 rpm at 230 V / 3000 rpm at 400 V											F							
3000 rpm at 230 V / Not permissible											G							
2500 rpm at 230 V / 4500 rpm at 400 V											H							
3000 rpm at 230 V / 6000 rpm at 400 V											K							
11th position: digit — **Brake**																		
Without												0						
Holding brake												1						
12th position: digit — **Degree of protection**																		
IP64 (without shaft sealing ring)													0					
IP65 (with shaft sealing ring)													1					
IP67 (with shaft sealing ring and spring lock washer) [1]													2					
13th position: digit — **Shaft extension, feather key**																		
Plain shaft															0			
Shaft with feather key															1			
Plain shaft, reduced shaft diameter • Ø11 × 23 mm (0.43 × 0.91 in) (for 1FT2.03 and IP64) • Ø14 × 30 mm (0.55 × 1.18 in) (for 1FT2.04 and IP64)													0		2			
14th position: letter — **Encoder**																		
Absolute encoder 22-bit singleturn (AS22DQC)																S		
Absolute encoder 22-bit + 12-bit multiturn (AM22DQC)																M		
Absolute encoder 26-bit singleturn (AS26DQC)																B		
Absolute encoder 26-bit + 12-bit multiturn (AM26DQC)																C		
15th position: letter — **One Cable Connection**																	A	
16th position: digit — Reserved																		0

[1] Not available in shaft height 20.

© Siemens 2022

Options

For one or more options, the Article No. of the motor must be supplemented with "**-Z**" and the order code.

Article No. of the motor 1FT2 . . . - . A . . . - . . A . -Z	Article No. supplement Order code
Increased detergent resistance	**N16**
Pressure balance [1]	**Q20**
Metal rating plate instead of adhesive label [2]	**Q31**
Paint system with primer	**K23**
Color	
• Jet black, mat	**X01**
• Cream white	**X02**
• Reseda green	**X03**
• Pebble gray	**X04**
• Sky blue	**X05**
• Light ivory	**X06**
• White aluminum	**X08**
Customer-specific text on rating plate [3]	**Y84**

Example:

1FT2104-4AF00-1SA0-Z
N16+Q31+X03

Increased detergent resistance

1FT2 motors are available with increased chemical resistance with order code **N16**.
The standard color is anthracite gray – can be combined with the colors according to order codes **X01** to **X08**.
Additional properties:

- 4-layer paint system (PS Premium paint system)
- Nickel-plated plug connectors

Motor applications:

Plants and systems in the foodstuff industry are typical applications for these types of versions. The paint system for these motors is resistant to a wide range of common cleaning and disinfecting agents.

Note:

More information on the resistance to the cleaning and disinfecting agents is available at:
https://support.industry.siemens.com/cs/document/58657336

Pressure balance [1]

Motors are provided with a connection to the pressure balance with order code **Q20**.

Metal rating plate instead of adhesive label [2]

The regular rating plate of the motor is a plastic adhesive label. A metal rating plate of aluminum can be ordered using order code **Q31**. The labeling is lasered on. This ensures legibility for a long time even under poor environmental conditions.

Coating color

If a color other than RAL 7016 (anthracite gray) is desired, this must be indicated by specifying the following order codes.

Color	RAL	Order code
Jet black, mat	9005	**X01**
Cream white	9001	**X02**
Reseda green	6011	**X03**
Pebble gray	7032	**X04**
Sky blue	5015	**X05**
Light ivory	1015	**X06**
White aluminum	9006	**X08**

Customer-specific text on rating plate [3]

Supplementary data (maximum of 20 characters) can be indicated on the rating plate and on the packaging label using order code **Y84**.

[1] Not available for shaft heights 20 and 30.
[2] Not available for shaft height 20.
[3] Order code **Y84** requires a plain text with the order.

© Siemens 2022

Technical specifications

General technical specifications

SIMOTICS S-1FT2 High Dynamic/Compact motors	
Motor type	Permanent-magnet synchronous motor
Permissible operating conditions without derating	
• Ambient temperature	-15 ... +40 °C (5 ... 104 °F)
• Installation altitude, max.	1000 m (3281 ft)
Degree of protection According to EN 60034-5 (IEC 60034-5)	IP64 IP65 optional or retrofittable optional IP67
Cooling According to EN 60034-6	Natural cooling (IC410)
Type of construction According to EN 60034-7 (IEC 60034-7)	IM B5 (IM V1, IM V3)
Shaft extension According to DIN 748-3 (IEC 60072-1)	Plain shaft Optional shaft with feather key (half-key balancing)
Shaft and flange accuracy According to DIN 42955 (IEC 60072-1)	Tolerance N In each case for radial eccentricity of the shaft extension, concentricity of the centering ring, and axial eccentricity of the mounting flange to the axis of the shaft extension.
Vibration severity grade According to EN 60034-14 (IEC 60034-14)	Grade A is maintained up to rated speed
Stator winding insulation According to EN 60034-1 (IEC 60034-1)	
• 1FT2102, 1FT2.03	Thermal class 130 (B) for a winding overtemperature of ΔT = 80 K
• 1FT2.04, 1FT2.05, 1FT2.06, 1FT2208, 1FT2210	Thermal class 155 (F) for a winding overtemperature of ΔT = 100 K
Sound pressure level L_{pA} (1 m), max. According to ISO 1680	
• 1FT2102, 1FT2.03, 1FT2.04	55 dB(A) + 3 dB(A) tolerance
• 1FT2.05 and 1FT2.06	65 dB(A) + 3 dB(A) tolerance
• 1FT2208 and 1FT2210	70 dB(A) + 3 dB(A) tolerance
Encoder system	• AS22DQC (absolute encoder 22-bit singleturn) • AM22DQC (absolute encoder 22-bit + 12-bit multiturn) • AS26DQC (absolute encoder 26-bit singleturn) • AM26DQC (absolute encoder 26-bit + 12-bit multiturn)
Holding brake	Optional integrated holding brake
Connection	One Cable Connection (OCC) for signals and power Rotatable connector
Coating color	RAL 7016 (anthracite gray) See Options for more colors
Certificates of suitability	cURus, CE, EAC, CEL

© Siemens 2022

Technical specifications

Regulations, standards, specifications

The motors comply with the appropriate standards and regulations, see table below.

As a result of the fact that in many countries the national regulations have been completely harmonized with the international IEC 60034-1 recommendation, there are no longer any differences with respect to coolant temperatures, temperature classes and temperature rise limits.

General specifications for rotating electrical machines	IEC 60034-1
Terminal designations and direction of rotation for electrical machines	IEC 60034-8
Types of construction of rotating electrical machines	IEC 60034-7
Cooling methods of rotating electrical machines	IEC 60034-6
Degrees of protection of rotating electrical machines	IEC 60034-5
Vibration severity of rotating electrical machines	IEC 60034-14
Noise limit values for rotating electrical machines	IEC 60034-9
Cylindrical shaft extensions for electrical machines	DIN 748-3/IEC 60072-1

SIMOTICS S-1FT2 motors have UL approval from Underwriters Laboratories Inc. and are marked with the "UL Recognized Component" test symbol. This is used for components which are part of a larger product or system. This confirmed compliance with the corresponding US American and Canadian regulations, and allowed access to the North American market.

For SIMOTICS S-1FT2 motors, conformity with the relevant EC directives 2006/95/EC and 2014/35/EU and the relevant standards EN 60034-1:2010 and EN 60204-1:2006 is confirmed. By applying the CE mark to the product, Siemens AG confirms this for the product, and secures the free movement of goods within the European Union.

Degree of protection acc. to IEC 60034-5

A suitable degree of protection must be selected according to the operating and environmental conditions to protect the motor against damage caused by the ingress of water and other liquids, as well as dust and foreign bodies.

SIMOTICS S-1FT2 motors have degree of protection IP64 as standard.

The motor can be optionally supplied with a radial shaft seal ring with degree of protection IP65. This increases the protection against the ingress of liquids.

Contrary to degree of protection IP65, degree of protection IP67 has increased protection against jet and splashing water as well as brief immersion. The mounting position of the motor must be chosen so that the stagnant water at the shaft exit is avoided.

The degree of protection designation is composed from the code **IP** (for International Protection) and two code numbers for the protection against touching and penetration of foreign bodies, and the degree of protection against the ingress of water.

First code number

6: Protection against dust ingress and complete protection against touching

Second code number

4: Protection against splashwater from any direction

5: Protection against jet water from any direction

7: Protection against brief immersion

Recommended degrees of protection for three-phase motors

When cooling lubricants are used, protection against water alone is inadequate. The IP rating should only be considered as a guide value in this case. The motors may have to be protected by suitable covers. Attention must be paid to providing suitable sealing of the motor shaft for the selected degree of protection for the motor.

The following table can serve as a decision aid for selecting the proper degree of protection for motors. A permanent covering of liquid on the flange must be avoided when the motor is mounted with the shaft extension facing upwards (IM V3).

Effect	General workshop environment	Water/ general cooling lubricant (95 % water, 5 % oil)
Dry	IP64	–
Water-enriched environment	–	IP64
Mist	–	IP65
Spraying water	–	IP65
Water jet	–	IP67
Splash/brief immersion/ constant inundation	–	IP67

© Siemens 2022

Technical specifications

Design format, mounting position according to IEC 60034-7

SIMOTICS S-1FT2 motors are designed in type of construction IM B5. It can also be used in mounting positions IM V1 and IM V3.

Code 1	IM B5	IM V1	IM V3
Code 2	IM 3001	IM 3011	IM 3031
	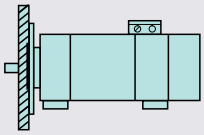	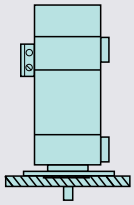	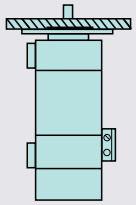
	Horizontal flange mounting	Flange mounting, output shaft pointing vertically downwards	Flange mounting, output shaft pointing vertically upwards

Shaft and flange accuracy in accordance with IEC 60072-1

Radial eccentricity tolerance of shaft in relation to housing axis

(referred to cylindrical shaft extensions)

Motor	Shaft extensions D × L mm (in)	Radial eccentricity Tolerance N µm
1FT2102	8 × 25 (0.31 × 0.98)	30
1FT2.03	14 × 30 (0.55 × 1.18)	35
	11 × 23 (0.43 × 0.91)	35
1FT2.04	19 × 40 (0.75 × 1.57)	40
	14 × 30 (0.55 × 1.18)	35
1FT2.05	19 × 40 (0.75 × 1.57)	40
1FT2.06	24 × 50 (0.94 × 1.97)	40
1FT2208	32 × 58 (1.26 × 2.28)	50
1FT2210	38 × 80 (1.50 × 3.15)	50

Concentricity and axial eccentricity tolerance of the flange surface for the shaft axis

(referred to the centering diameter of the mounting flange)

Motor	Centering diameter mm (in)	Concentricity and axial eccentricity Tolerance N µm
1FT2102	30 (1.18)	80
1FT2.03	50 (1.97)	
1FT2.04	70 (2.76)	
1FT2205	80 (3.15)	
1FT2105	95 (3.74)	
1FT2.06	110 (4.33)	100
1FT2208	130 (5.12)	
1FT2210	130 (5.12)	

Test: runout

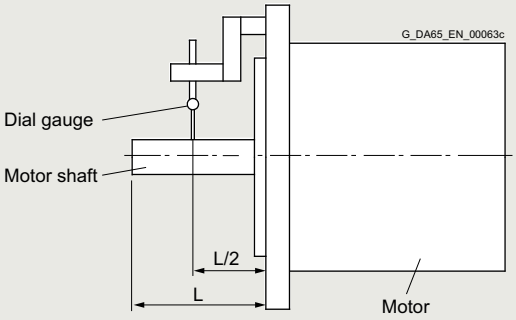

Test: concentricity

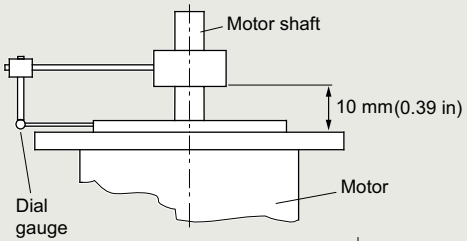

Test: perpendicularity

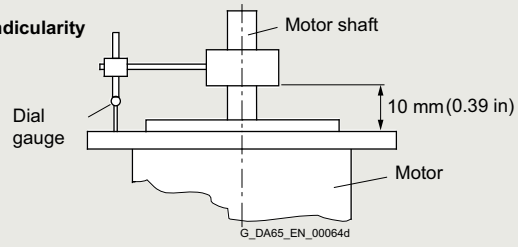

© Siemens 2022

Technical specifications

Vibration severity and vibration severity grade A according to IEC 60034-14

The vibration severity is the RMS value of the vibration velocity (frequency range from 10 Hz to 1000 Hz). The vibration severity is measured using electrical measuring devices according to DIN 45666.

The specified values refer only to the motor. These values can increase as a result of the overall system vibrational behavior due to installation.

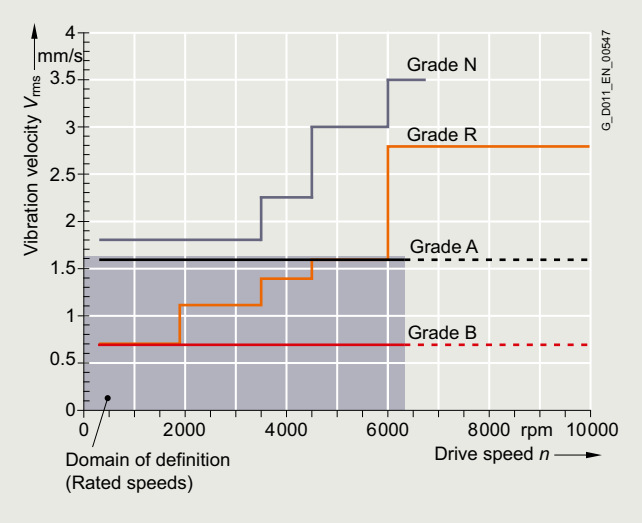

Vibration severity limit values

The speeds of 1800 rpm and 3600 rpm and the associated limit values are specified according to IEC 60034-14.
The speeds of 4500 rpm and 6000 rpm and the specified values are defined by the motor manufacturer.

The motors maintain vibration severity grade A up to the rated speed.

Balancing according to ISO 21940-32

Apart from the balance quality of the motor, the vibrational quality of motors with attached pulleys is mainly determined by the balance state of the mounted component. If the motor and the mounted component are balanced separately before being joined, the balancing process of the pulley is to be adapted to the motor's balancing type.

SIMOTICS S-1FT2 motors with feather keys are always half-key balanced. In general, motors with a plain shaft are recommended for systems with the most stringent vibrational quality requirements.

Vibration stress, immitted vibration values

The requirements of environmental class 3M8 (according to EN 60721-3-3 Table 6) must be maintained for proper function and safeguard the bearing life. The following limits are valid for (immitted) vibration values introduced into the motor from outside:

- Vibration velocity V_{rms} according to ISO 10816, max. 4.5 mm/s (0.18 in/s)
- Vibration acceleration a_{peak} axial and radial 50 m/s^2 (164 ft/s^2)

During transport, the motors withstand single shocks (6 ms) of up to 250 m/s^2 (820 ft/s^2).

Ambient temperature and installation altitude

Operating range without restrictions:

Temperature range from -15 °C to +40 °C (5.0 °F to 104 °F), installation altitude up to 1000 m (3281 ft).

If deviating conditions are encountered, the S1 characteristic of the motor must be adapted with regard to speed and torque.

Use the following equation to calculate the reduced S1 characteristic:
$S1_{red}\,(n) = x_D \times S1_{40°C;\ 1000m}\,(n/x_D)$

Installation altitude above sea level	Derating factor x_D at an ambient temperature of					
m (ft)	5 °C (41 °F)	10 °C (50 °F)	20 °C (68 °F)	30 °C (86 °F)	40 °C (104 °F)	50 °C (122 °F)
1000 (3281)	1.16	1.14	1.1	1.05	1	0.91
2000 (6562)	1.12	1.1	1.05	1	0.95	0.84

Encoder systems

In motors with integrated OCC/DRIVE-CLiQ interface, the sensor signal is already digitally prepared in the motor, and then transferred quickly and without loss to the drive system. Motors with an OCC/DRIVE-CLiQ interface simplify commissioning and diagnostics, as the motor parameters and encoder system are identified automatically.

Singleturn absolute encoder

This encoder outputs an absolute angular position between 0° and 360° in the specified resolution. In contrast to the multiturn absolute encoder, it does not have a revolution counter, and can therefore only supply the position value within one revolution. It does not have a traversing range.

Multiturn absolute encoder

This encoder outputs an absolute angular position between 0° and 360° in the specified resolution. It can also count 4096 revolutions. So with a ball screw, for example, the absolute position of the slide can be determined over a longer distance.

14th position in the Article No. of the motor	Designation	
1FT2 ...-.....-.**S**..	AS22DQC	Absolute encoder 22-bit singleturn (resolution 4194304)
1FT2 ...-.....-.**M**..	AM22DQC	Absolute encoder 22-bit + 12-bit multiturn (resolution 4194304, traversing range 4096 revolutions)
1FT2 ...-.....-.**B**..	AS26DQC	Absolute encoder 26-bit singleturn (resolution 67108864)
1FT2 ...-.....-.**C**..	AM26DQC	Absolute encoder 26-bit + 12-bit multiturn (resolution 67108864, traversing range 4096 revolutions)

© Siemens 2022

Technical specifications

Holding brake

Many drives need a holding brake with an EMERGENCY STOP function for safety reasons or to meet process requirements. The brakes used on the SIMOTICS S-1FT2 motors function according to the closed-circuit principle. A spring or permanent magnet exerts a tensile force on the brake armature disk, i.e. in a state of zero current, the brake is closed and the motor shaft thereby stopped.

An electric current that flows through a coil generates an opposing field that counteracts the force effect of the spring or permanent magnet and releases or holds open the brake. Only a limited number of braking operations can be performed for an EMERGENCY STOP or power failure without causing excessive wear on the holding brake. The holding brake is not an operational brake. Regular dynamic braking leads to increased wear and premature brake failure. In order to ensure the functionality and specification of the brake, neither the total operating energy nor the maximum switching energy per braking operation may be exceeded.

The brake control is already fully integrated into the SINAMICS S210 converter system, so that an external circuit is not necessary.

After an EMERGENCY STOP sequence with the maximum single switching energy, a cooling time of at least 5 minutes must be allowed.

The following table contains technical specifications of the holding brakes for operating on a SINAMICS S210 (for 1-AC devices as of hardware version 2) and from firmware V5.2.

Motor	Shaft height	Holding torque	Average dynamic braking torque	Maximum dynamic braking torque	Opening time	Closing time	Maximum permissible single switching energy	Total operating energy (service life)	Holding current	Break-induced current, typ. [1] for 500 ms
		Nm (lb_f-ft)	Nm (lb_f-ft)	Nm (lb_f-ft)	ms	ms	J	kJ	A	A
1FT2102	20	0.32 (0.24)	0.32 (0.24)	1 (0.74)	25	20	7.4	1.75	0.1	0.6
1FT2.03	30	1.3 (0.96)	1.3 (0.96)	3.9 (2.88)	40	30	62	17.5	0.15	0.8
1FT2.04	40	3.3 (2.43)	3.3 (2.43)	9 (6.64)	50	40	270	120	0.2	1.2
1FT2.05	48/52	8 (5.90)	5 (3.69)	18 (13.28)	35	20	570	284	0.3	1.1
1FT2106	63	16 (11.80)	9 (6.64)	35 (25.82)	70	35	1065	774	0.35	1.1
1FT2206	63	13 (9.59)	6.5 (4.79)	35 (25.82)	70	35	1550	774	0.35	1.1
1FT2208-3	80	19 (14.0)	12 (8.85)	37 (27.29)	70	35	2000	1800	0.4	1.2
1FT2208-4	80	32 (23.60)	17 (12.54)	70 (51.63)	120	40	4800	2400	0.5	1.4
1FT2208-5	80	32 (23.60)	17 (12.54)	70 (51.63)	120	40	4800	2400	0.5	1.4
1FT2210-3	100	32 (23.60)	17 (12.54)	70 (51.63)	120	40	6500	2400	0.5	1.4
1FT2210-4	100	55 (40.57)	26 (19.18)	100 (73.76)	130	65	8700	3800	0.5	1.5
1FT2210-5	100	55 (40.57)	26 (19.18)	100 (73.76)	130	65	8700	3800	0.5	1.5

[1] Typical values at an ambient temperature of 20 °C (68° F).
At -15 °C (5 °F), the break-induced currents can increase by up to 30 %.

© Siemens 2022

Technical specifications

SIMOTICS S-1FT2 shaft height 20

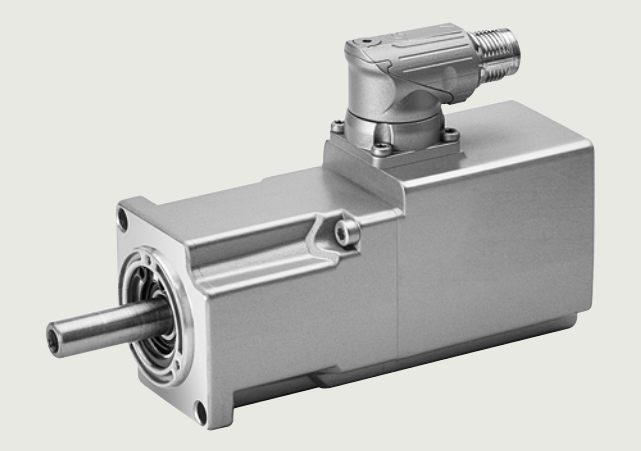

Specific technical specifications

SIMOTICS S-1FT2 servomotors		High Dynamic	
Shaft height 20		**1FT2102-0AG**	**1FT2102-1AG**
Static torque M_0	Nm (lb_f-ft)	0.16 (0.12)	0.32 (0.24)
Stall current I_0	A	0.75	0.76
Maximum torque M_{max}	Nm (lb_f-ft)	0.56 (0.41)	1.11 (0.82)
Maximum current I_{max}	A	3.1	2.95
Maximum speed n_{max}	rpm	8000	8000
Rotor moment of inertia J_{Mot}	kg cm^2 (lb_f-in^2)	0.025 (0.009)	0.036 (0.012)
Moment of inertia (with brake) $J_{Mot\ Br}$	kg cm^2 (lb_f-in^2)	0.029 (0.010)	0.040 (0.014)
Weight m_{Mot}	kg (lb)	0.47 (1.04)	0.60 (1.32)
Weight (with brake) $m_{Mot\ Br}$	kg (lb)	0.73 (1.61)	0.86 (1.90)
200 ... 240 V 1 AC / 3 AC			
Rated speed n_N	rpm	3000	3000
Rated torque M_N	Nm (lb_f-ft)	0.16 (0.12)	0.32 (0.24)
Rated current I_N	A	0.75	0.76
Rated power P_N	W	50	100
Suitable for SINAMICS S210 servo converter			
• 200 ... 240 V 1 AC		6SL3210-5HB10-1UF0	6SL3210-5HB10-1UF0
• 200 ... 240 V 3 AC		6SL3210-5HE10-4UF0	6SL3210-5HE10-4UF0

© Siemens 2022

Technical specifications

Dimensional drawing

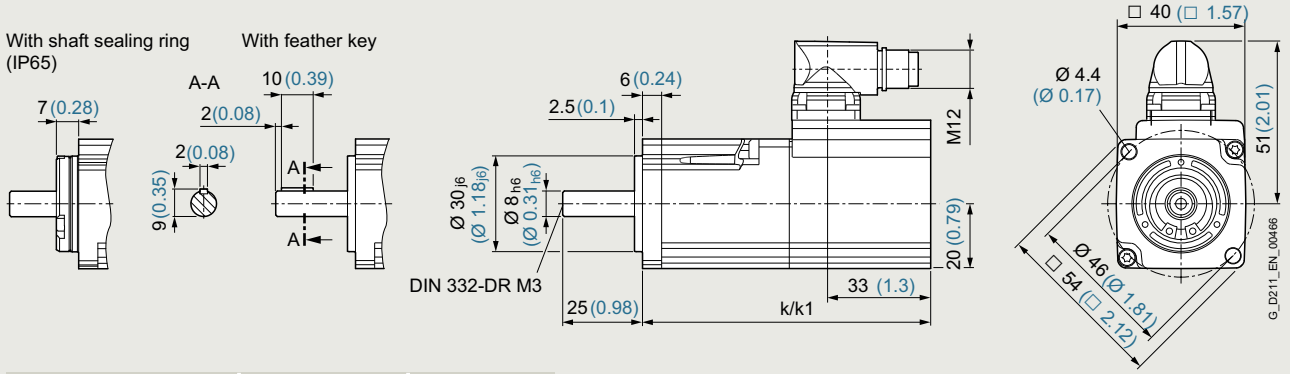

Shaft height 20 DIN IEC	Without brake k LB	With brake k1 LB1
1FT2102-0A...	90 (3.54)	121 (4.76)
1FT2102-1A...	106 (4.17)	137 (5.39)

All dimensions in mm (values in brackets are in inches).

Speed/torque characteristics

High Dynamic

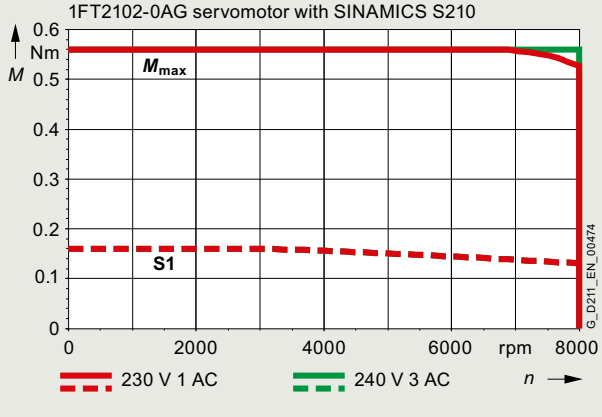

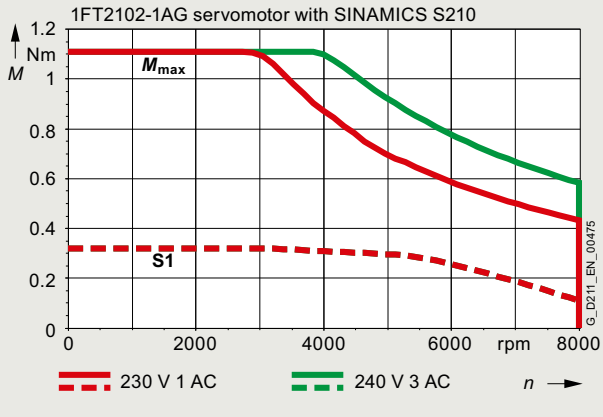

© Siemens 2022

Technical specifications

SIMOTICS S-1FT2 shaft height 30

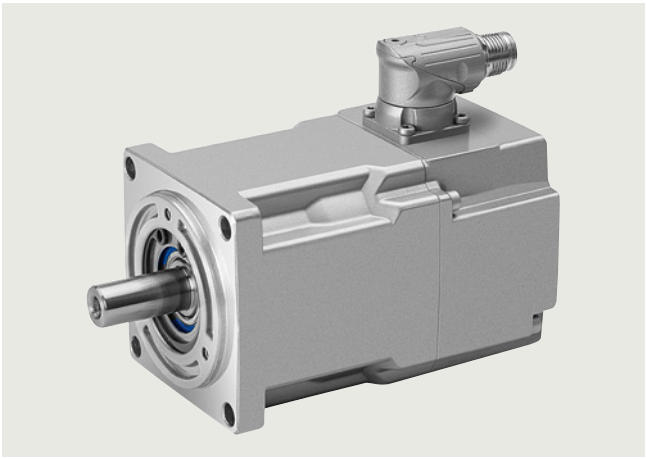

Specific technical specifications

SIMOTICS S-1FT2 servomotors		High Dynamic				Compact			
Shaft height 30		**1FT2103-2AG**	**1FT2103-2AH**	**1FT2103-4AG**	**1FT2103-4AH**	**1FT2203-2AG**	**1FT2203-2AK**	**1FT2203-4AG**	**1FT2203-4AK**
Static torque M_0	Nm (lb_f-ft)	0.64 (0.47)	0.64 (0.47)	1.27 (0.94)	1.27 (0.94)	0.64 (0.47)	0.64 (0.47)	1.27 (0.94)	1.27 (0.94)
Stall current I_0	A	1.36	1.06	2.4	1.87	1.38	1.05	2.52	2.05
Maximum torque M_{max}	Nm (lb_f-ft)	1.95 (1.44)	1.95 (1.44)	4.05 (2.99)	4.05 (2.99)	1.85 (1.36)	1.85 (1.36)	3.75 (2.77)	3.75 (2.77)
Maximum current I_{max}	A	4.8	3.95	8.7	7.1	4.2	3.4	7.8	6.7
Maximum speed n_{max}	rpm	8000	8000	8000	8000	8000	8000	8000	8000
Rotor moment of inertia J_{Mot}	kg cm^2 (lb_f-in^2)	0.093 (0.032)	0.093 (0.032)	0.14 (0.048)	0.14 (0.048)	0.20 (0.068)	0.20 (0.068)	0.35 (0.120)	0.35 (0.120)
Moment of inertia (with brake) $J_{Mot\ Br}$	kg cm^2 (lb_f-in^2)	0.11 (0.038)	0.11 (0.038)	0.16 (0.055)	0.16 (0.055)	0.22 (0.075)	0.22 (0.075)	0.37 (0.126)	0.37 (0.126)
Weight m_{Mot}	kg (lb)	1.17 (2.58)	1.18 (2.60)	1.64 (3.62)	1.65 (3.64)	1.15 (2.54)	1.16 (2.56)	1.48 (3.26)	1.49 (3.29)
Weight (with brake) $m_{Mot\ Br}$	kg (lb)	1.54 (3.40)	1.55 (3.42)	1.98 (4.37)	1.99 (4.39)	1.52 (3.35)	1.53 (3.37)	1.96 (4.32)	1.97 (4.34)
200 ... 240 V 1 AC / 3 AC									
Rated speed n_N	rpm	3000	–	3000	–	3000	–	3000	–
Rated torque M_N	Nm (lb_f-ft)	0.64 (0.47)	–	1.27 (0.94)	–	0.64 (0.47)	–	1.27 (0.94)	–
Rated current I_N	A	1.36	–	2.4	–	1.38	–	2.52	–
Rated power P_N	W	200	–	400	–	200	–	400	–
380 ... 480 V 3 AC									
Rated speed n_N	rpm	–	4500	–	4500	–	6000	–	6000
Rated torque M_N	Nm (lb_f-ft)	–	0.59 (0.44)	–	1.01 (0.74)	–	0.405 (0.299)	–	0.68 (0.50)
Rated current I_N	A	–	1.05	–	1.56	–	0.75	–	1.24
Rated power P_N	W	–	280	–	480	–	255	–	430
Suitable for SINAMICS S210 servo converter									
• 200 ... 240 V 1 AC		6SL3210-5HB10-2UF0		6SL3210-5HB10-4UF0		6SL3210-5HB10-2UF0		6SL3210-5HB10-4UF0	
• 200 ... 240 V 3 AC		6SL3210-5HE10-8UF0		6SL3210-5HE11-0UF0		6SL3210-5HE10-8UF0		6SL3210-5HE11-0UF0	
• 380 ... 480 V 3 AC		–	6SL3210-5HE10-4UF0	–	6SL3210-5HE10-8UF0	–	6SL3210-5HE10-4UF0	–	6SL3210-5HE10-8UF0

© Siemens 2022

Technical specifications

Dimensional drawing

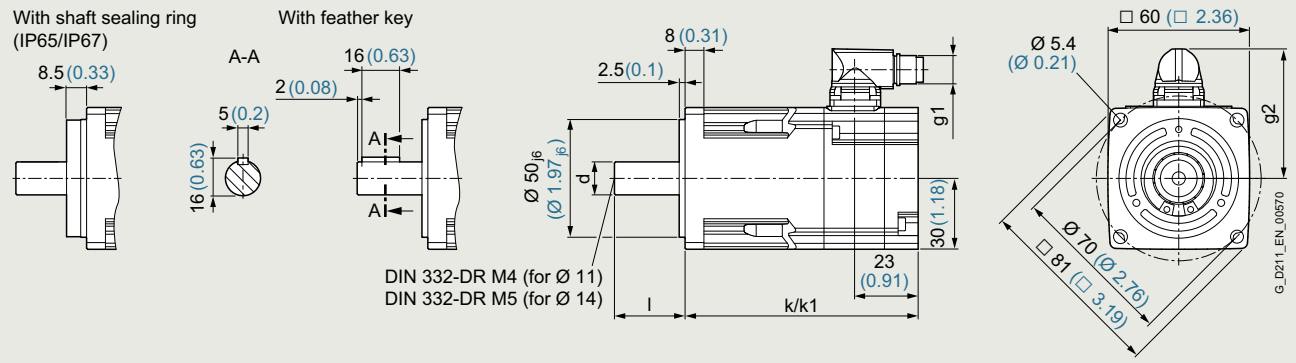

Shaft height 30 DIN IEC	Without brake k LB	With brake k1 LB1	With shaft Ø 14 d D	 l L	With shaft Ø 11 d D	 l L	Plug g1 G1	 g2 G2
1FT2.03-2AG	99 (3.9)	131 (5.16)	Ø 14_{h6} (Ø 0.55_{h6})	30 (1.18)	Ø 11_{k6} (Ø 0.43_{k6})	23 (0.91)	M12	55 (2.17)
1FT2.03-2AH 1FT2.03-2AK							M17	60 (2.36)
1FT2.03-4AG	123 (4.84)	155 (6.1)	Ø 14_{h6} (Ø 0.55_{h6})	30 (1.18)	Ø 11_{k6} (Ø 0.43_{k6})	23 (0.91)	M12	55 (2.17)
1FT2.03-4AH 1FT2.03-4AK							M17	60 (2.36)

All dimensions in mm (values in brackets are in inches).

Speed/torque characteristics

High Dynamic

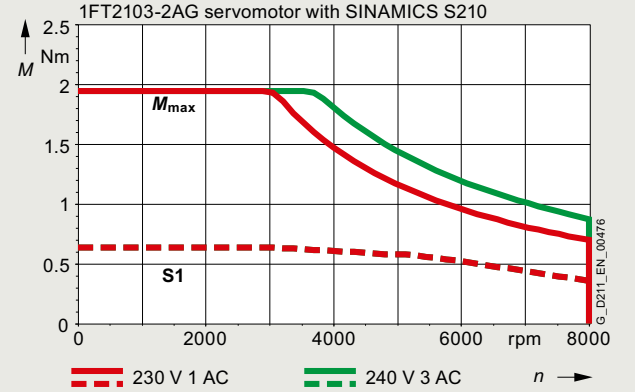

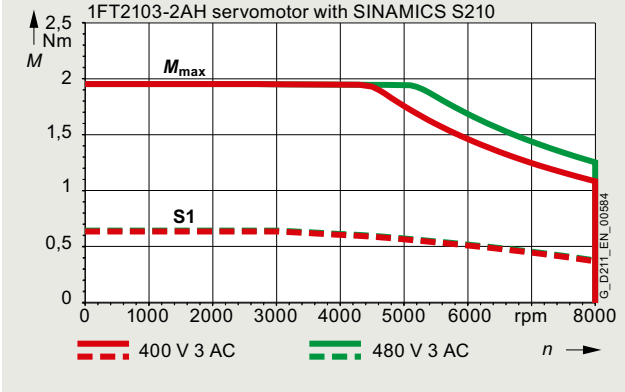

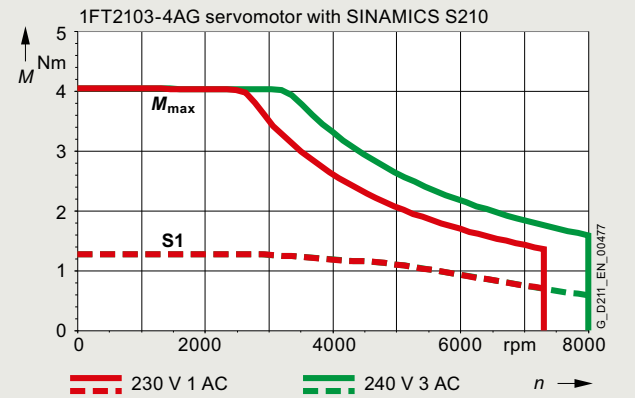

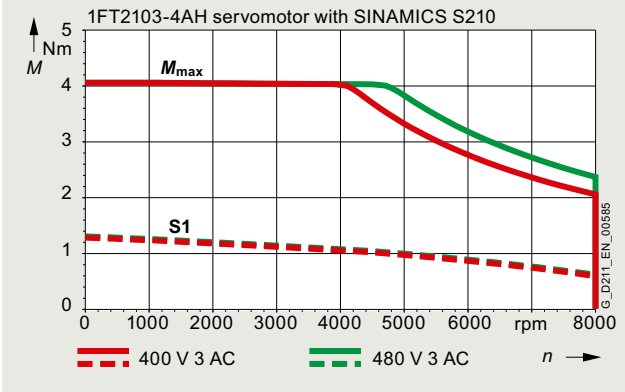

© Siemens 2022

Technical specifications

Compact

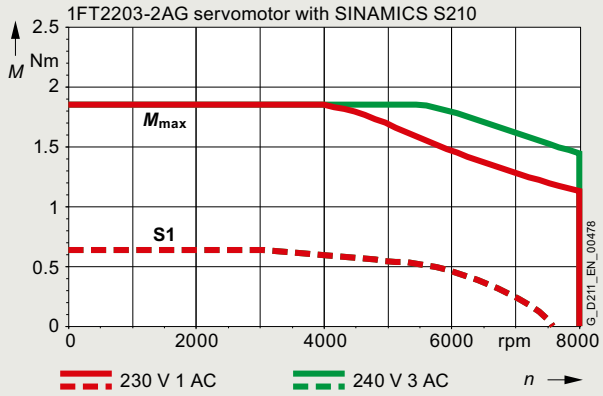

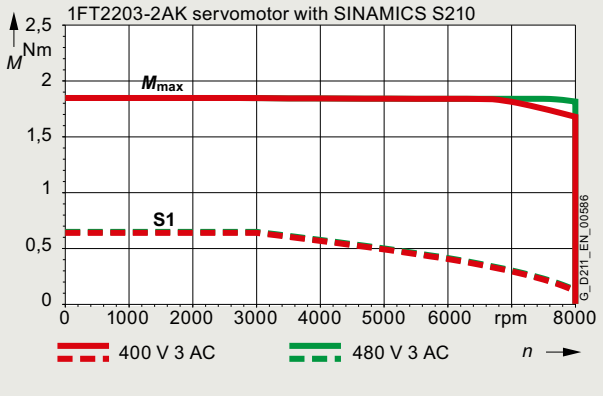

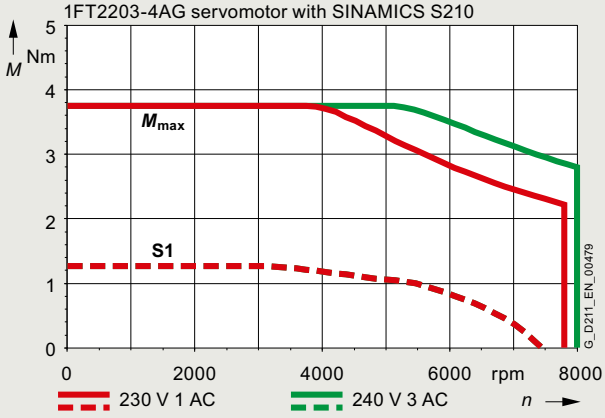

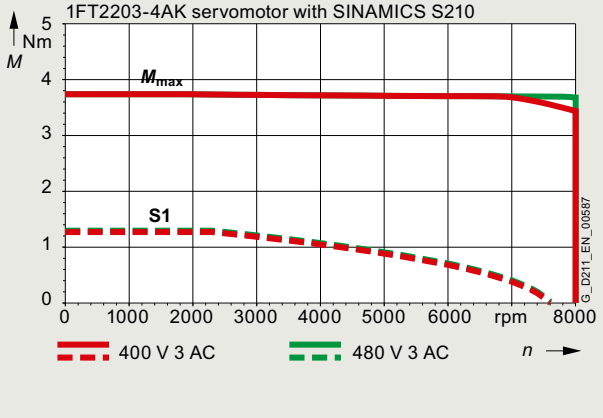

© Siemens 2022

Technical specifications

SIMOTICS S-1FT2 shaft height 40

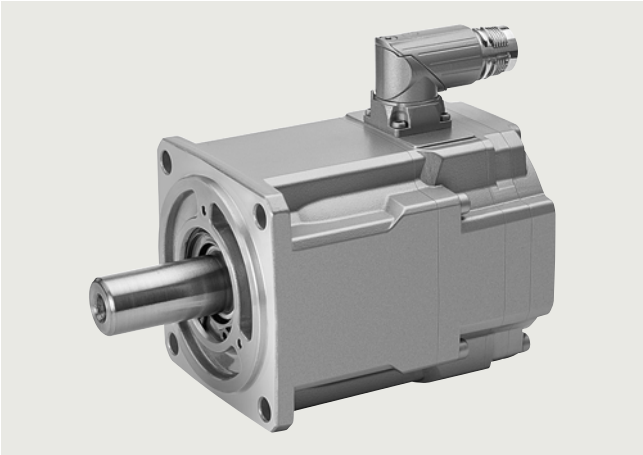

Specific technical specifications

SIMOTICS S-1FT2 servomotors		High Dynamic					Compact		
Shaft height 40		**1FT2104-4AF**	**1FT2104-4AK**	**1FT2104-5AF**	**1FT2104-5AK**	**1FT2104-6AF**	**1FT2204-5AF**	**1FT2204-5AK**	**1FT2204-6AF**
Static torque M_0	Nm (lb_f-ft)	1.27 (0.94)	1.27 (0.94)	2.4 (1.77)	2.4 (1.77)	3.2 (2.36)	2.4 (1.77)	2.4 (1.77)	3.2 (2.36)
Stall current I_0	A	1.19	2.4	2.1	4.4	3	2.25	4.4	3
Maximum torque M_{max}	Nm (lb_f-ft)	3.75 (2.77)	3.85 (2.84)	7.5 (5.53)	7.6 (5.61)	10 (7.38)	7.1 (5.24)	7.1 (5.24)	9.5 (7.01)
Maximum current I_{max}	A	4.2	8.7	7.6	16	10.9	7.1	14.2	9.9
Maximum speed n_{max}	rpm	7200	8000	6700	8000	7200	7500	8000	7600
Rotor moment of inertia J_{Mot}	kg cm^2 (lb_f-in^2)	0.35 (0.120)	0.35 (0.120)	0.56 (0.191)	0.56 (0.191)	0.76 (0.260)	1.2 (0.410)	1.2 (0.410)	1.6 (0.547)
Moment of inertia (with brake) $J_{Mot\ Br}$	kg cm^2 (lb_f-in^2)	0.43 (0.147)	0.43 (0.147)	0.65 (0.222)	0.65 (0.222)	0.84 (0.287)	1.3 (0.444)	1.3 (0.444)	1.7 (0.581)
Weight m_{Mot}	kg (lb)	2.1 (4.63)	2.1 (4.63)	2.9 (6.39)	2.9 (6.39)	3.4 (7.50)	2.9 (6.39)	2.9 (6.39)	3.5 (7.72)
Weight (with brake) $m_{Mot\ Br}$	kg (lb)	2.9 (6.39)	2.9 (6.39)	3.7 (8.16)	3.7 (8.16)	4.3 (9.48)	3.8 (8.38)	3.8 (8.38)	4.4 (9.70)
200 ... 240 V 1 AC / 3 AC									
Rated speed n_N	rpm	1500	3000	1500	3000	1500	1500	3000	1500
Rated torque M_N	Nm (lb_f-ft)	1.27 (0.94)	1.27 (0.94)	2.4 (1.77)	2.4 (1.77)	3.2 (2.36)	2.4 (1.77)	2.4 (1.77)	3.2 (2.36)
Rated current I_N	A	1.19	2.4	2.1	4.4	3	2.25	4.4	3
Rated power P_N	W	200	400	375	750	500	375	750	500
380 ... 480 V 3 AC									
Rated speed n_N	rpm	3000	6000	3000	6000	3000	3000	6000	3000
Rated torque M_N	Nm (lb_f-ft)	1.27 (0.94)	0.95 (0.70)	2.4 (1.77)	1.7 (1.25)	3.2 (2.36)	2.4 (1.77)	0.9 (0.66)	3.2 (2.36)
Rated current I_N	A	1.19	1.88	2.1	3.20	3	2.25	1.95	3
Rated power P_N	W	400	600	750	1070	1000	750	570	1000
Suitable for SINAMICS S210 servo converter									
• 200 ... 240 V 1 AC		6SL3210-5HB10-2UF0	6SL3210-5HB10-4UF0	6SL3210-5HB10-4UF0	6SL3210-5HB10-8UF0	6SL3210-5HB10-8UF0	6SL3210-5HB10-4UF0	6SL3210-5HB10-8UF0	6SL3210-5HB10-8UF0
• 200 ... 240 V 3 AC		6SL3210-5HE10-4UF0	6SL3210-5HE11-0UF0	6SL3210-5HE10-8UF0	6SL3210-5HE11-5UF0	6SL3210-5HE11-0UF0	6SL3210-5HE10-8UF0	6SL3210-5HE11-5UF0	6SL3210-5HE11-0UF0
• 380 ... 480 V 3 AC		6SL3210-5HE10-4UF0	6SL3210-5HE11-0UF0	6SL3210-5HE10-8UF0	6SL3210-5HE11-5UF0	6SL3210-5HE11-0UF0	6SL3210-5HE10-8UF0	6SL3210-5HE11-5UF0	6SL3210-5HE11-0UF0

© Siemens 2022

Technical specifications

Dimensional drawing

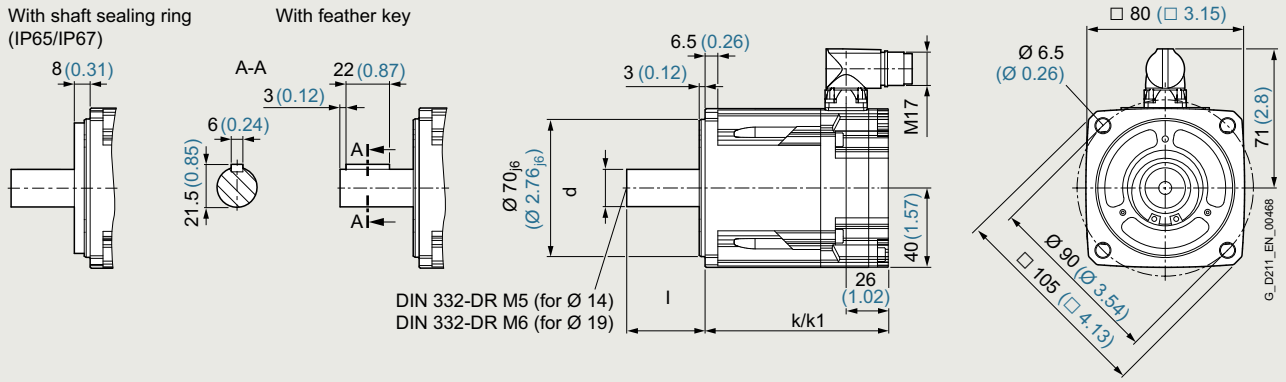

Shaft height 40 DIN IEC	Without brake k LB	With brake k1 LB1	With shaft Ø 19 × 40 d D	 l L	With plain shaft Ø 14 × 30 (for IP64 only and without feather key) d D	 l L
1FT2.04-4A...	98 (3.86)	142 (5.59)				
1FT2.04-5A...	126 (4.96)	170 (6.69)	Ø 19_{k6} (Ø 0.75_{k6})	40 (1.57)	Ø 14_{k6} (Ø 0.55_{k6})	30 (1.18)
1FT2.04-6A...	144 (5.67)	188 (7.4)				

All dimensions in mm (values in brackets are in inches).

Speed/torque characteristics

High Dynamic

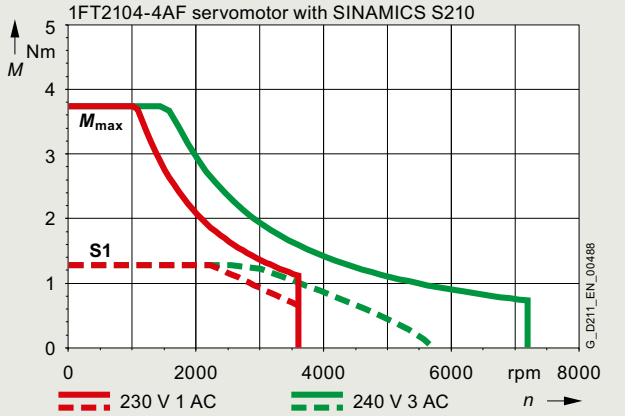

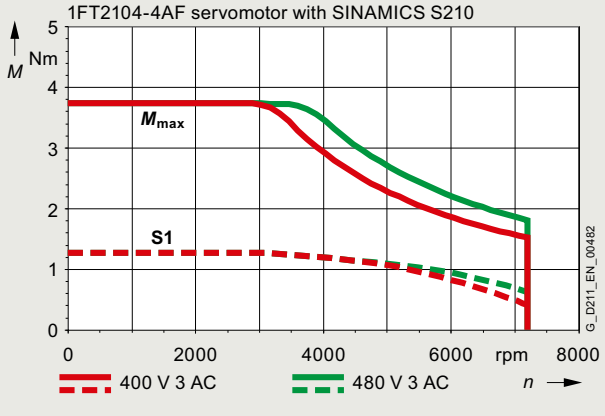

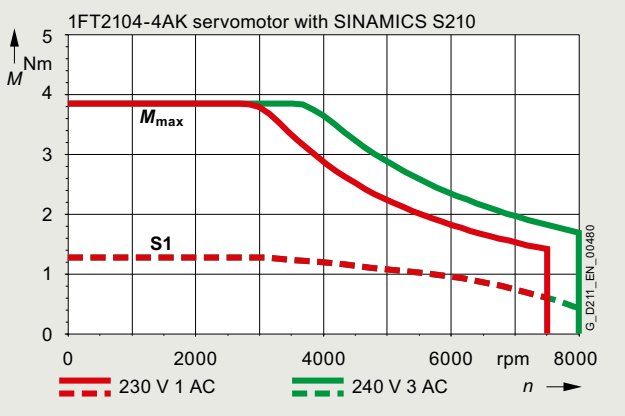

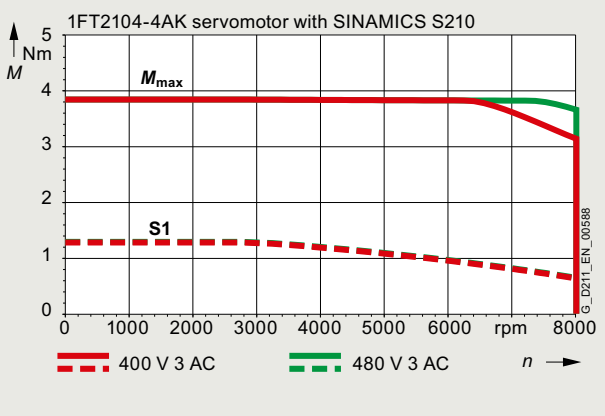

© Siemens 2022

Technical specifications

Speed/torque characteristics (continued)

High Dynamic (continued)

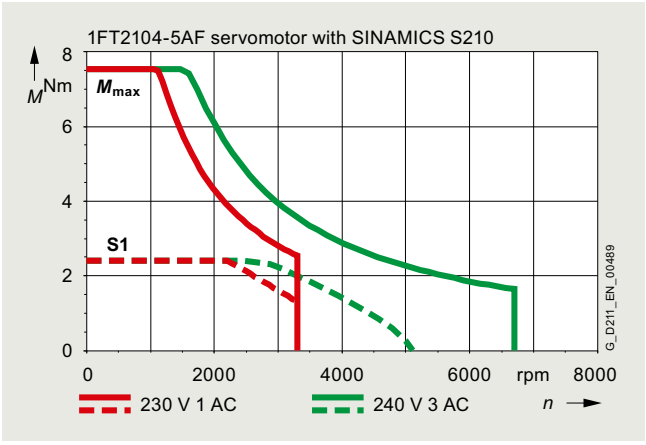

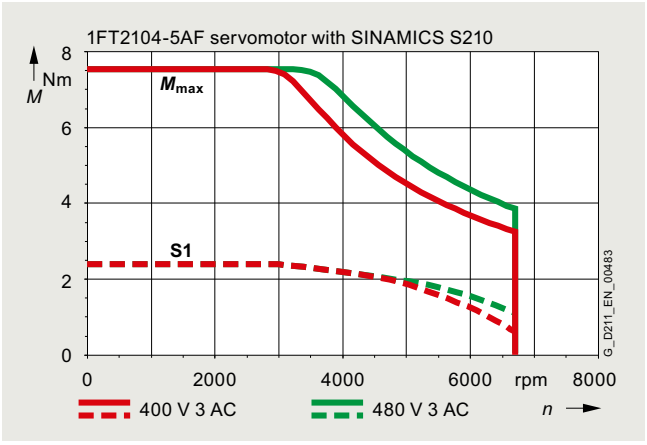

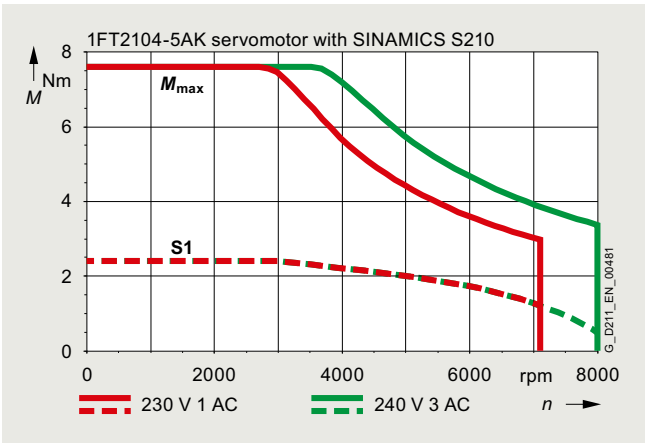

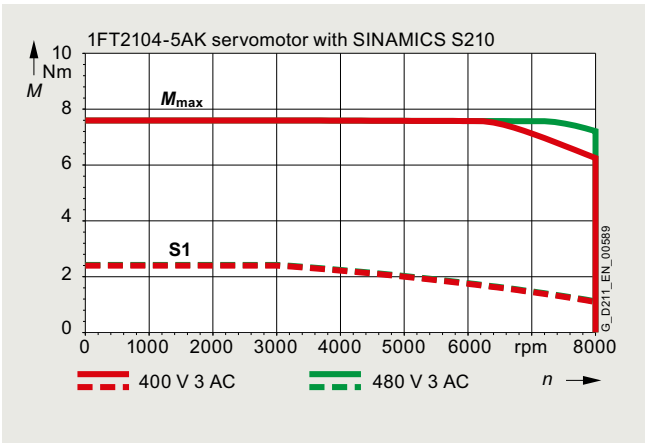

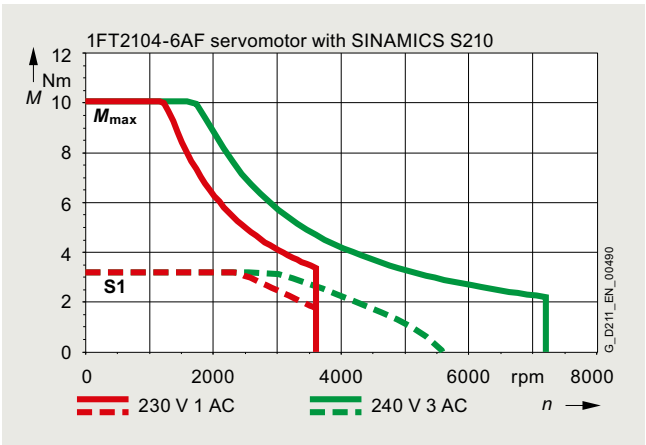

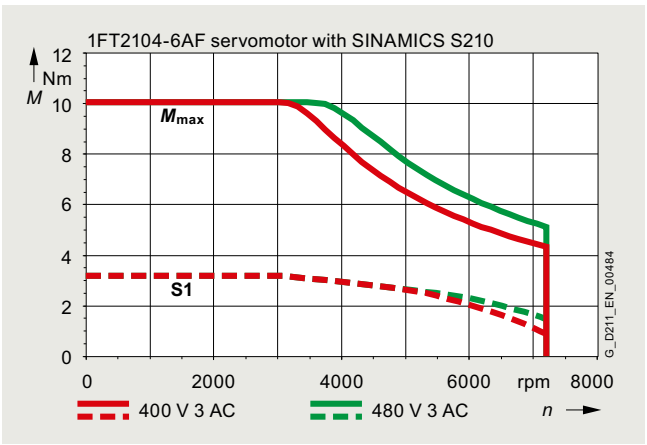

© Siemens 2022

Technical specifications

Speed/torque characteristics (continued)

Compact

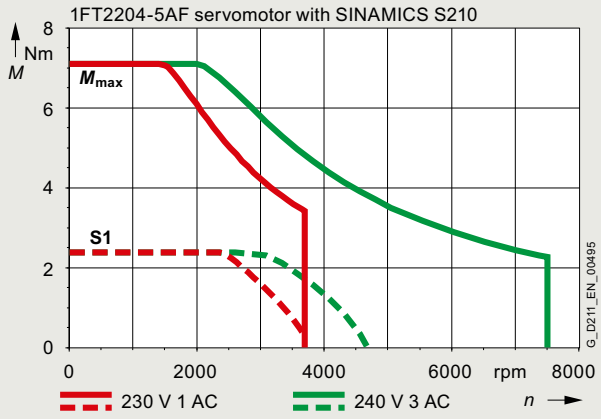

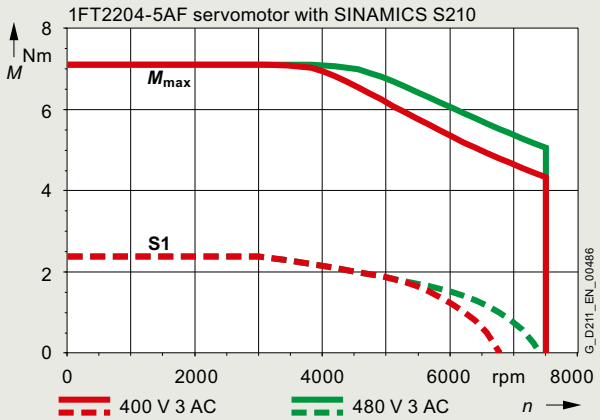

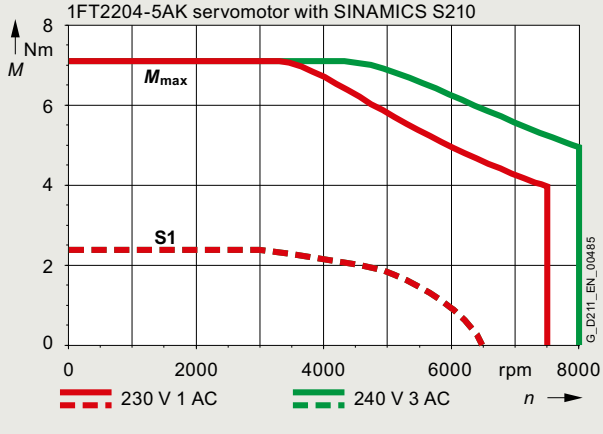

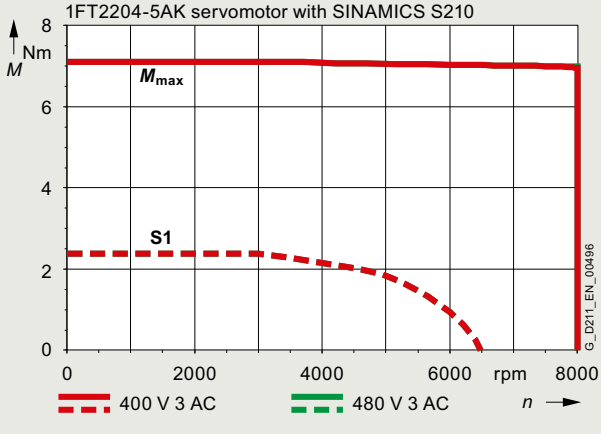

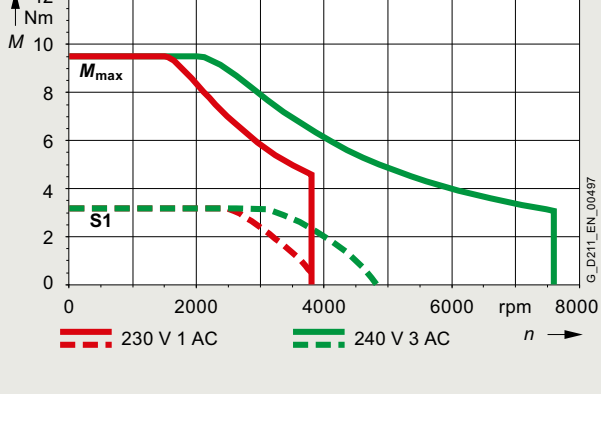

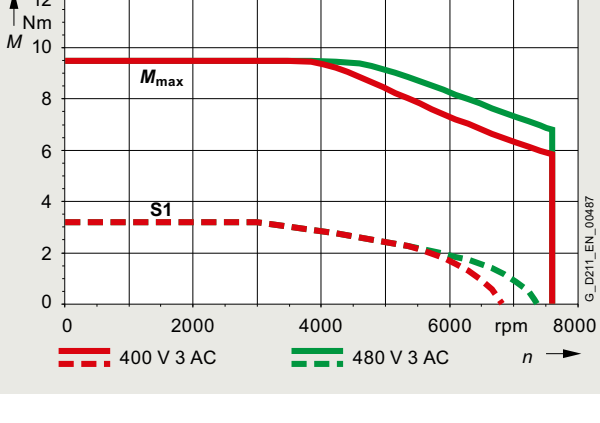

© Siemens 2022

Technical specifications

SIMOTICS S-1FT2 shaft height 48

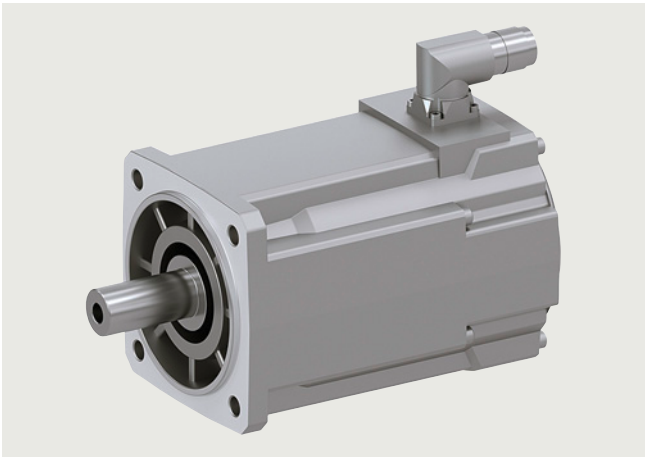

Specific technical specifications

SIMOTICS S-1FT2 servomotors		**Compact**		
Shaft height 48		**1FT2205-2AF**	**1FT2205-2AH**	**1FT2205-4AF**
Static torque M_0	Nm (lb_f-ft)	3.6 (2.66)	3.6 (2.66)	6 (4.43)
Stall current I_0	A	2.9	3.8	4.7
Maximum torque M_{max}	Nm (lb_f-ft)	10.8 (7.97)	10.8 (7.97)	18 (13.28)
Maximum current I_{max}	A	9.5	12.1	15.1
Maximum speed n_{max}	rpm	6500	8300	6200
Rotor moment of inertia J_{Mot}	kg cm^2 (lb_f-in^2)	3.2 (1.093)	3.2 (1.093)	5.1 (1.743)
Moment of inertia (with brake) $J_{Mot\ Br}$	kg cm^2 (lb_f-in^2)	4.1 (1.401)	4.1 (1.401)	6.0 (2.050)
Weight m_{Mot}	kg (lb)	3.8 (8.38)	3.8 (8.38)	5.2 (11.47)
Weight (with brake) $m_{Mot\ Br}$	kg (lb)	4.8 (10.58)	4.8 (10.58)	6.2 (13.67)
200 ... 240 V 1 AC / 3 AC				
Rated speed n_N	rpm	1500	2500	1500
Rated torque M_N	Nm (lb_f-ft)	3.4 (2.51)	3.15 (2.33)	5.5 (4.06)
Rated current I_N	A	2.8	3.45	4.35
Rated power P_N	W	530	820	860
380 ... 480 V 3 AC				
Rated speed n_N	rpm	3000	4500	3000
Rated torque M_N	Nm (lb_f-ft)	3 (2.21)	2.3 (1.70)	4.6 (3.39)
Rated current I_N	A	2.5	2.55	3.75
Rated power P_N	W	940	1100	1450
Suitable for SINAMICS S210 servo converter				
• 200 ... 240 V 1 AC		6SL3210-5HB10-8UF0	–	–
• 200 ... 240 V 3 AC		6SL3210-5HE11-0UF0	6SL3210-5HE11-5UF0	6SL3210-5HE11-5UF0
• 380 ... 480 V 3 AC		6SL3210-5HE11-0UF0	6SL3210-5HE11-5UF0	6SL3210-5HE11-5UF0

© Siemens 2022

Technical specifications

Dimensional drawing

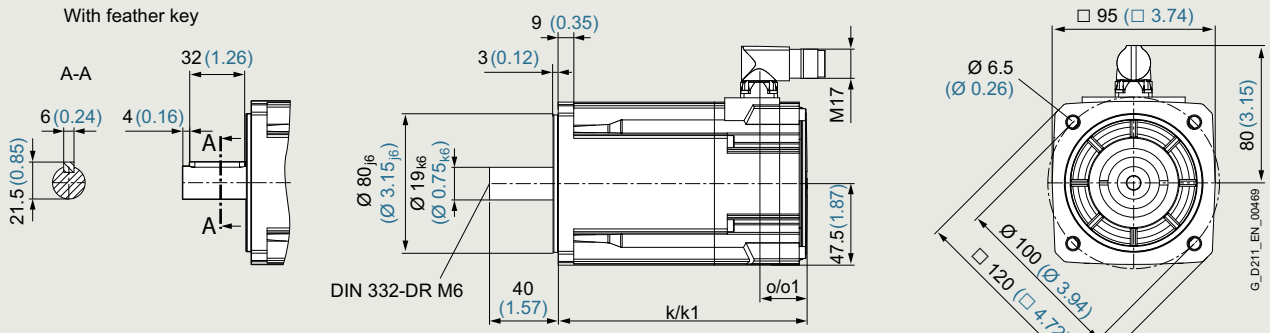

Shaft height 48 DIN IEC	Without brake k LB	With brake k1 LB1	Without brake o –	With brake o1 –
1FT2205-2A...	145 (5.71)	188 (7.4)	28 (1.1)	34 (1.34)
1FT2205-4A...	177 (6.97)	220 (8.66)		

All dimensions in mm (values in brackets are in inches).

Speed/torque characteristics

Compact

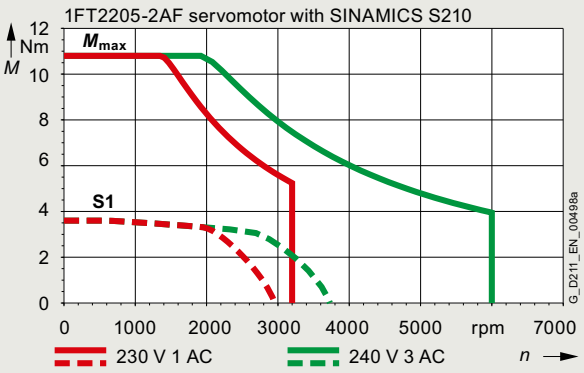

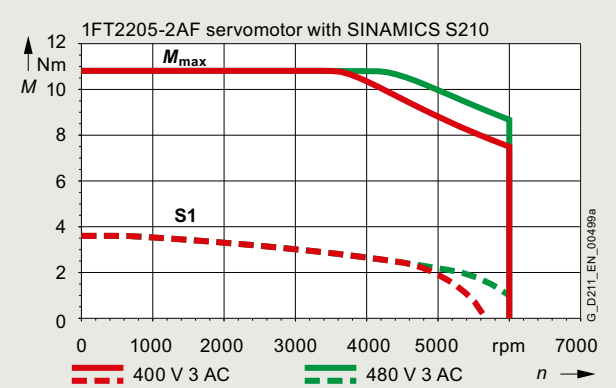

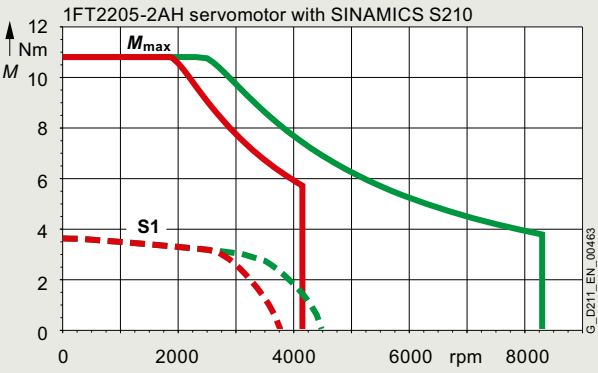

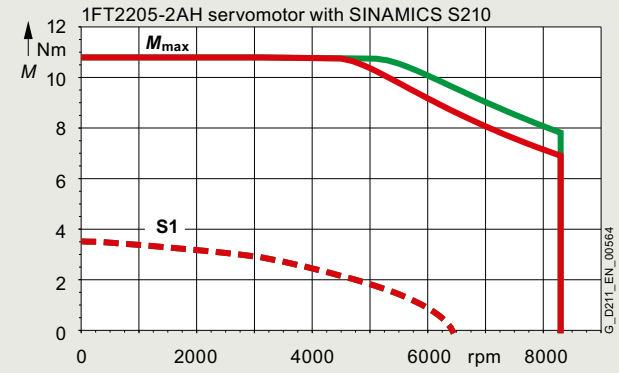

© Siemens 2022

Technical specifications

Speed/torque characteristics (continued)

Compact (continued)

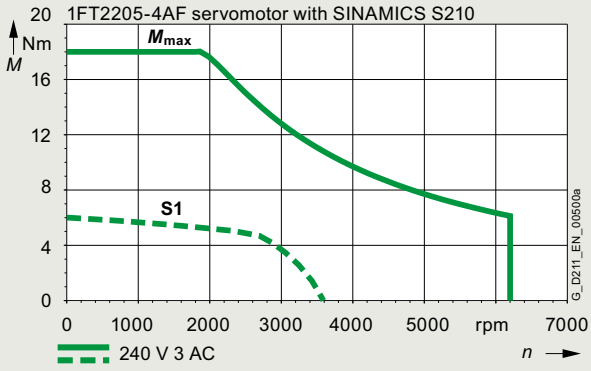

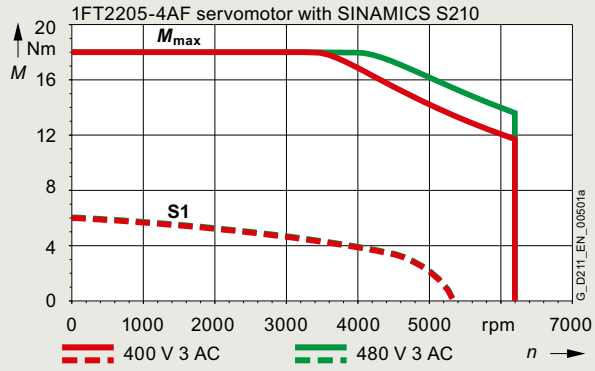

© Siemens 2022

Technical specifications

SIMOTICS S-1FT2 shaft height 52

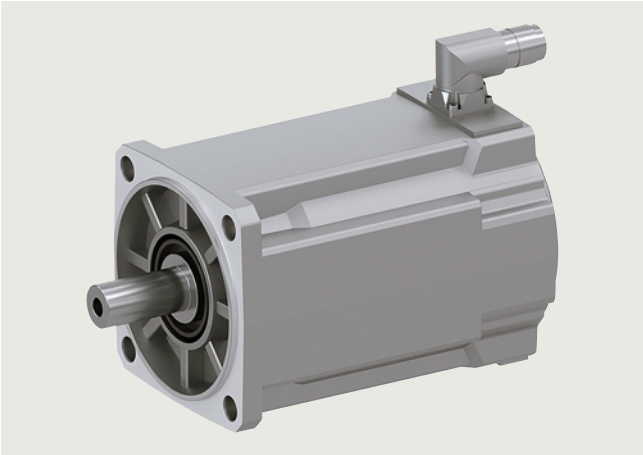

Specific technical specifications

SIMOTICS S-1FT2 servomotors		High Dynamic		
Shaft height 52		**1FT2105-4AF**	**1FT2105-4AH**	**1FT2105-6AF**
Static torque M_0	Nm (lb_f-ft)	5 (3.69)	5 (3.69)	8 (5.90)
Stall current I_0	A	4.65	6.9	6.7
Maximum torque M_{max}	Nm (lb_f-ft)	15 (11.06)	15 (11.06)	24 (17.70)
Maximum current I_{max}	A	18	27	24
Maximum speed n_{max}	rpm	7400	9000	6600
Rotor moment of inertia J_{Mot}	kg cm^2 (lb_f-in^2)	1.7 (0.581)	1.7 (0.581)	2.7 (0.923)
Moment of inertia (with brake) $J_{Mot\ Br}$	kg cm^2 (lb_f-in^2)	2.6 (0.888)	2.6 (0.888)	3.5 (1.196)
Weight m_{Mot}	kg (lb)	5.6 (12.35)	5.6 (12.35)	7.7 (16.98)
Weight (with brake) $m_{Mot\ Br}$	kg (lb)	6.6 (14.55)	6.6 (14.55)	8.7 (19.18)
200 ... 240 V 3 AC				
Rated speed n_N	rpm	1500	2500	1500
Rated torque M_N	Nm (lb_f-ft)	5 (3.69)	4.85 (3.58)	8 (5.90)
Rated current I_N	A	4.65	6.9	6.7
Rated power P_N	W	790	1270	1260
380 ... 480 V 3 AC				
Rated speed n_N	rpm	3000	4500	3000
Rated torque M_N	Nm (lb_f-ft)	4.6 (3.39)	3.7 (2.73)	6.6 (4.87)
Rated current I_N	A	4.35	5.4	5.6
Rated power P_N	W	1450	1740	2100
Suitable for SINAMICS S210 servo converter				
• 200 ... 240 V 3 AC		6SL3210-5HE11-5UF0	6SL3210-5HE13-5UF0	6SL3210-5HE12-0UF0
• 380 ... 480 V 3 AC		6SL3210-5HE11-5UF0	6SL3210-5HE13-5UF0	6SL3210-5HE12-0UF0

© Siemens 2022

Technical specifications

Dimensional drawing

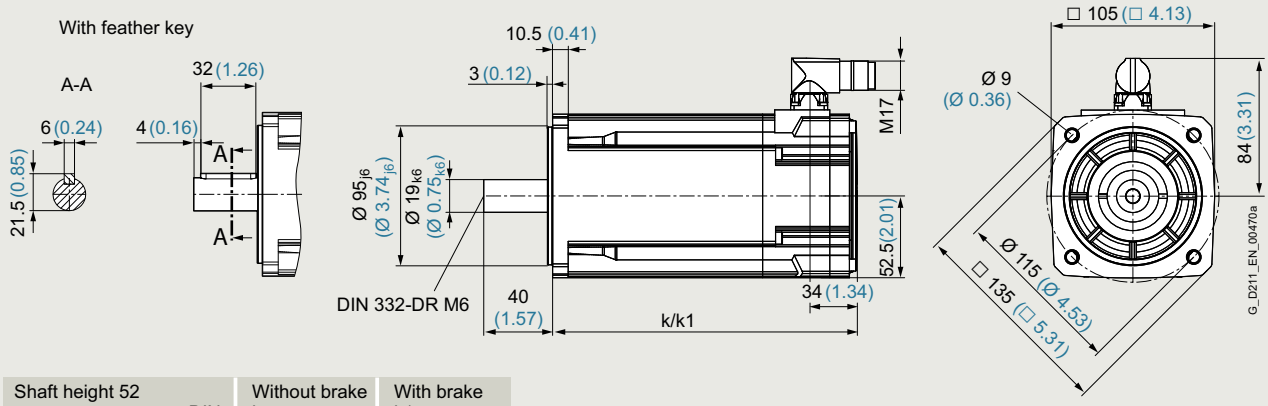

Shaft height 52 DIN IEC	Without brake k LB	With brake k1 LB1
1FT2105-4A…	173 (6.81)	200 (7.87)
1FT2105-6A…	215 (8.46)	242 (9.53)

All dimensions in mm (values in brackets are in inches).

Speed/torque characteristics

High Dynamic

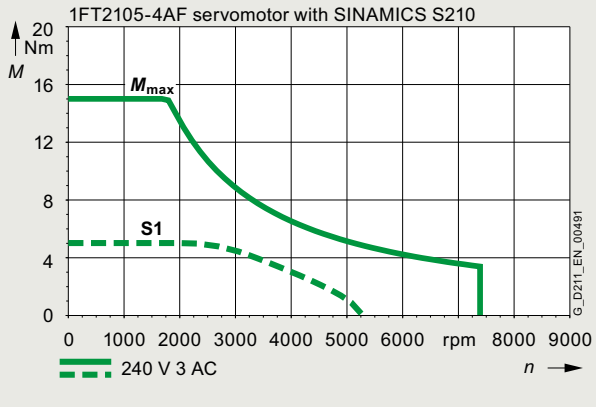

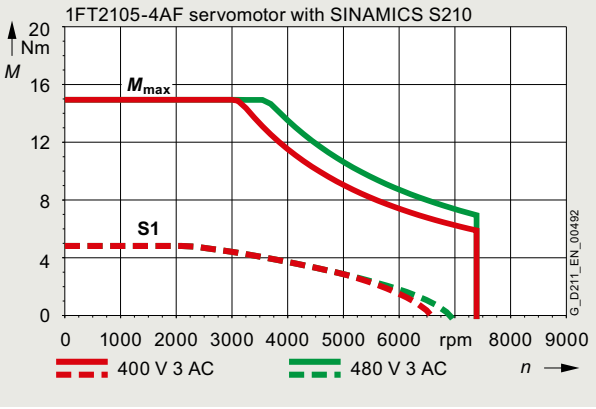

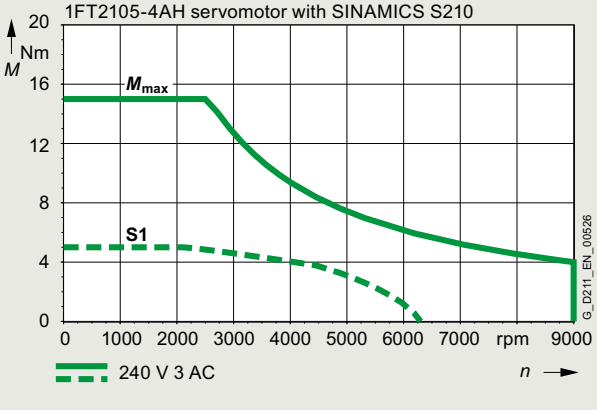

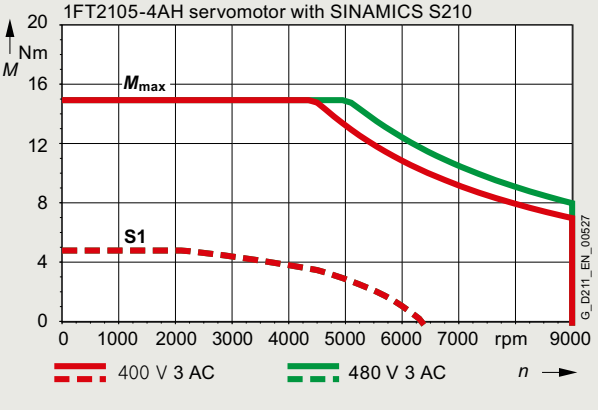

© Siemens 2022

Technical specifications

Speed/torque characteristics (continued)

High Dynamic (continued)

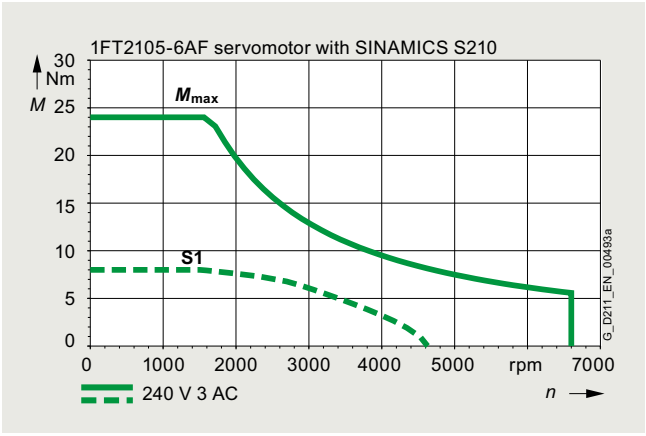

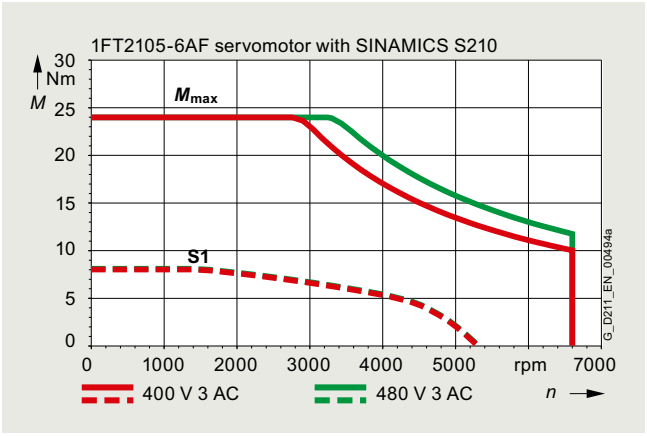

© Siemens 2022

Technical specifications

SIMOTICS S-1FT2 shaft height 63

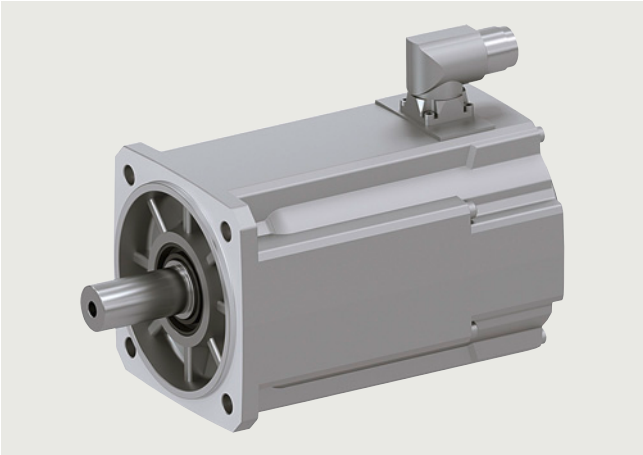

Specific technical specifications

SIMOTICS S-1FT2 servomotors		High Dynamic			Compact			
Shaft height 63		**1FT2106-3AF**	**1FT2106-4AF**	**1FT2106-6AF**	**1FT2206-2AF**	**1FT2206-2AH**	**1FT2206-4AF**	**1FT2206-4AH**
Static torque M_0	Nm (lb_f-ft)	9 (6.64)	12 (8.85)	16 (11.80)	6.5 (4.79)	6.5 (4.79)	12 (8.85)	12 (8.85)
Stall current I_0	A	9.2	10.7	14.3	5	6.5	7.9	12
Maximum torque M_{max}	Nm (lb_f-ft)	26 (19.18)	33 (24.34)	45.5 (33.56)	18 (13.28)	18 (13.28)	36 (26.55)	36 (26.55)
Maximum current I_{max}	A	43	42	49	17.8	22.5	29.5	44
Maximum speed n_{max}	rpm	8000	7800	7600	6800	8000	5800	8000
Rotor moment of inertia J_{Mot}	kg cm^2 (lb_f-in^2)	4.6 (1.572)	6.0 (2.050)	8.7 (2.973)	7.8 (2.665)	7.8 (2.665)	15 (5.126)	15 (5.126)
Moment of inertia (with brake) $J_{Mot\ Br}$	kg cm^2 (lb_f-in^2)	6.3 (2.153)	7.6 (2.597)	10 (3.417)	9.4 (3.212)	9.4 (3.212)	17 (5.809)	17 (5.809)
Weight m_{Mot}	kg (lb)	7.4 (16.32)	9,0 (19.85)	12 (26.46)	6.3 (13.89)	6.3 (13.89)	8.9 (19.62)	8.9 (19.62)
Weight (with brake) $m_{Mot\ Br}$	kg (lb)	9,0 (19.85)	11 (24.26)	13 (28.67)	7.9 (17.42)	7.9 (17.42)	11 (24.26)	11 (24.26)
200 ... 240 V 3 AC								
Rated speed n_N	rpm	1500	1500	1500	1500	2500	1500	2500
Rated torque M_N	Nm (lb_f-ft)	8.3 (6.12)	10.5 (7.74)	13.8 (10.18)	6.1 (4.50)	5.5 (4.06)	10.9 (8.04)	9.3 (6.86)
Rated current I_N	A	8.7	9.6	12.5	4.8	5.7	7.3	9.8
Rated power P_N	W	1300	1640	2150	970	1450	1720	2400
380 ... 480 V 3 AC								
Rated speed n_N	rpm	3000	3000	3000	3000	4500	3000	4500
Rated torque M_N	Nm (lb_f-ft)	7.3 (5.38)	8.6 (6.34)	10.6 (7.82)	5.4 (3.98)	3.9 (2.90)	9.1 (6.71)	4.7 (3.47)
Rated current I_N	A	7.9	8.1	9.7	4.35	4.1	6.2	5.2
Rated power P_N	W	2300	2700	3300	1710	1800	2850	2200
Suitable for SINAMICS S210 servo converter								
• 200 ... 240 V 3 AC		6SL3210-5HE15-0UF0	6SL3210-5HE15-0UF0	6SL3210-5HE15-0UF0	6SL3210-5HE11-5UF0	6SL3210-5HE11-5UF0	6SL3210-5HE13-5UF0	6SL3210-5HE15-0UF0
• 380 ... 480 V 3 AC		6SL3210-5HE15-0UF0	6SL3210-5HE15-0UF0	6SL3210-5HE17-0UF0	6SL3210-5HE11-5UF0	6SL3210-5HE12-0UF0	6SL3210-5HE13-5UF0	6SL3210-5HE15-0UF0

© Siemens 2022

Technical specifications

Dimensional drawing

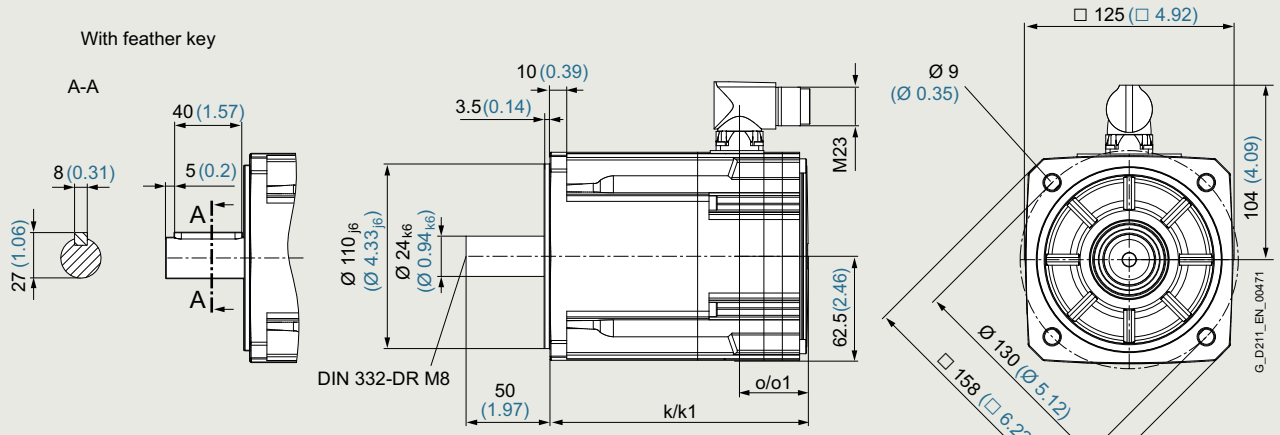

Shaft height 63 DIN IEC	Without brake k LB	With brake k1 LB1	Without brake o –	With brake o1 –
1FT2206-2A…	154 (6.06)	205 (8.07)	41 (1.61)	53 (2.09)
1FT2106-3A…	174 (6.85)	225 (8.86)		
1FT2.06-4A…	193 (7.6)	244 (9.61)		
1FT2106-6A…	232 (9.13)	283 (11.14)		

All dimensions in mm (values in brackets are in inches).

Speed/torque characteristics

High Dynamic

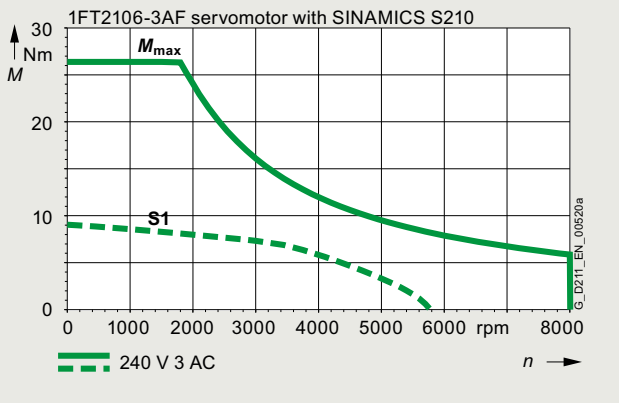

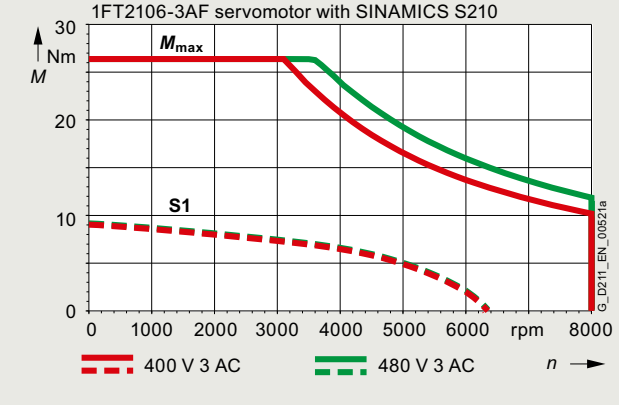

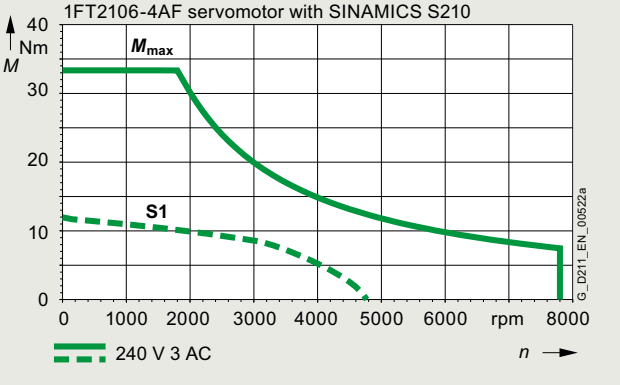

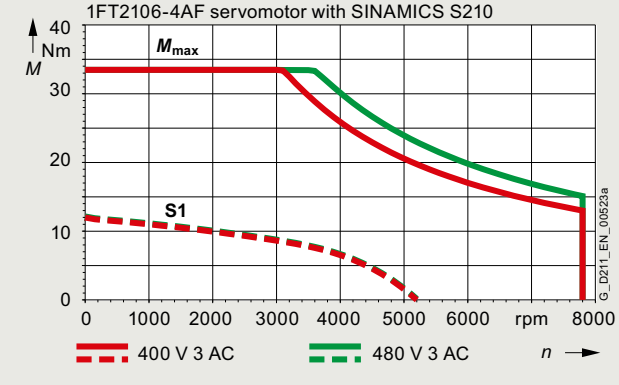

© Siemens 2022

Technical specifications

Speed/torque characteristics (continued)

High Dynamic (continued)

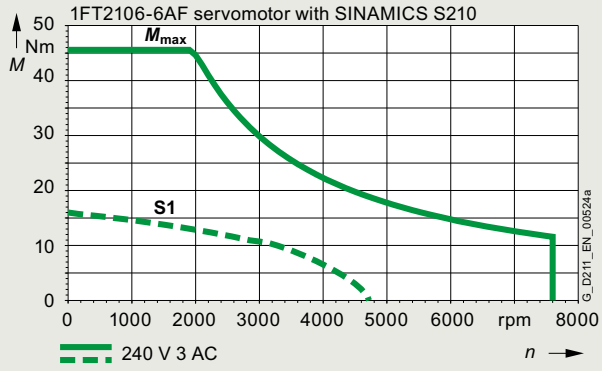

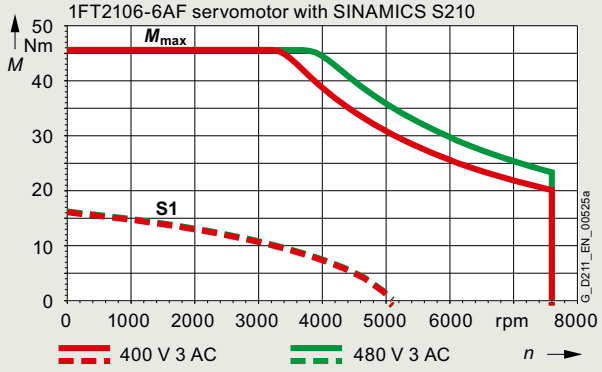

Compact

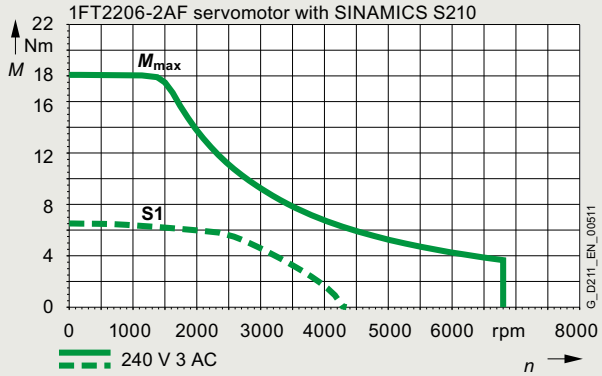

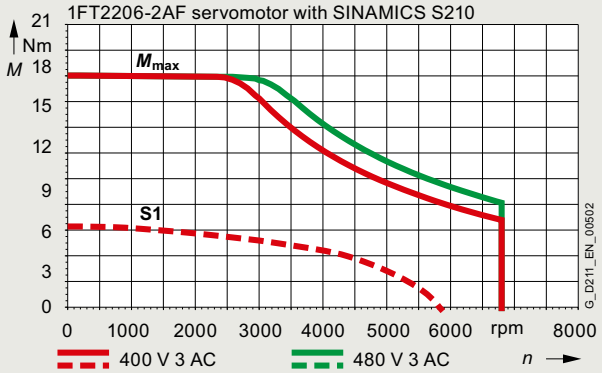

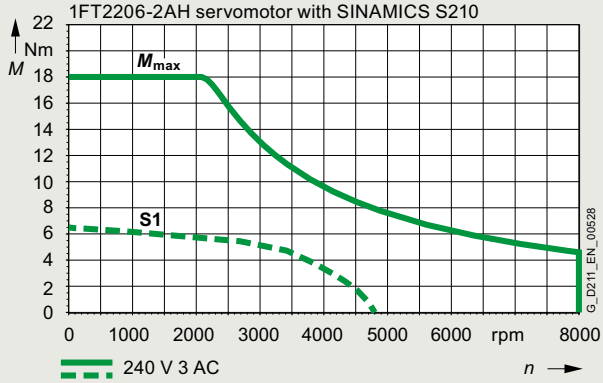

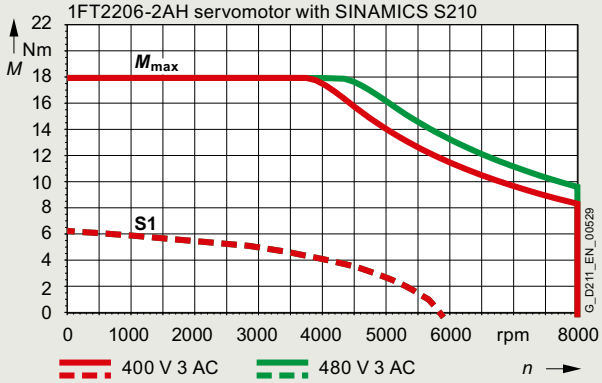

© Siemens 2022

Technical specifications

Speed/torque characteristics (continued)

Compact (continued)

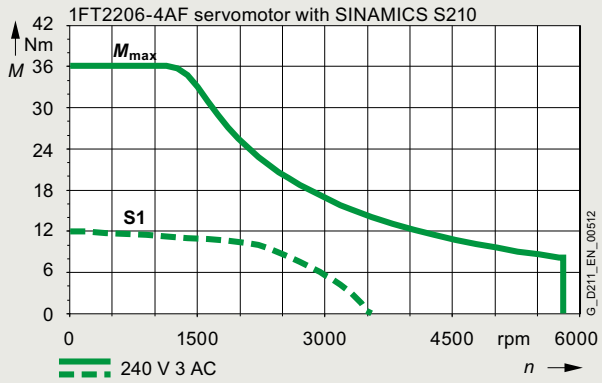

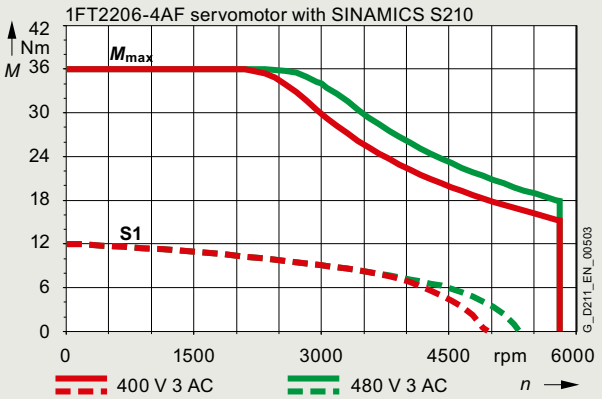

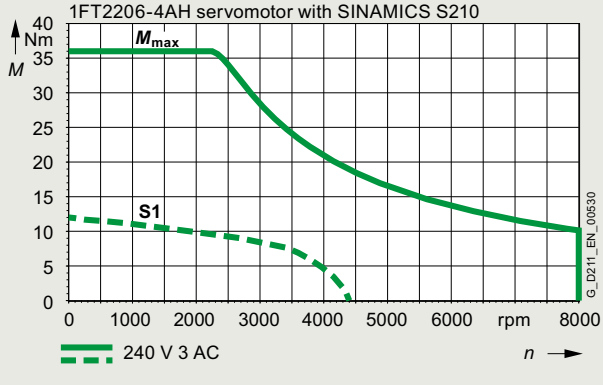

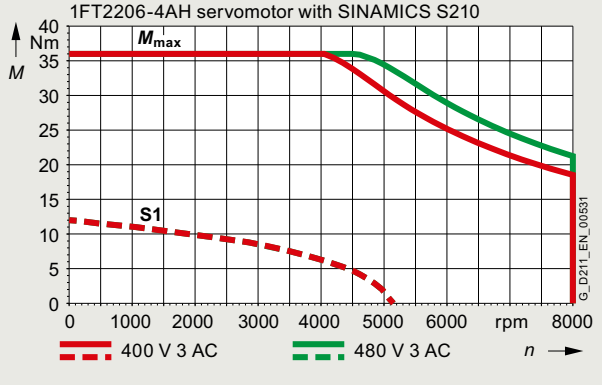

© Siemens 2022

Technical specifications

SIMOTICS S-1FT2 shaft height 80

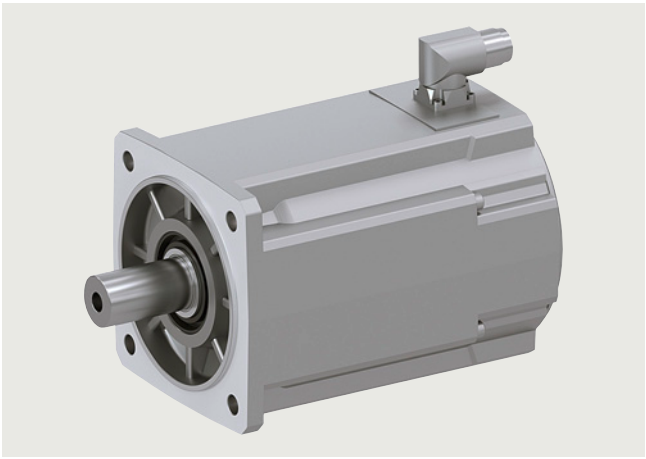

Specific technical specifications

SIMOTICS S-1FT2 servomotors		Compact				
Shaft height 80		**1FT2208-3AC**	**1FT2208-3AF**	**1FT2208-4AC**	**1FT2208-4AF**	**1FT2208-5AC**
Static torque M_0	Nm (lb_f-ft)	18 (13.28)	18 (13.28)	22 (16.23)	22 (16.23)	27 (19.92)
Stall current I_0	A	8.4	11.9	11.7	15	15
Maximum torque M_{max}	Nm (lb_f-ft)	51 (37.62)	51 (37.62)	66 (48.68)	66 (48.68)	80 (59.01)
Maximum current I_{max}	A	29.5	40	43.5	55	51.5
Maximum speed n_{max}	rpm	4100	5600	4600	5900	4700
Rotor moment of inertia J_{Mot}	kg cm^2 (lb_f-in^2)	30 (10.251)	30 (10.251)	39 (13.326)	39 (13.326)	48 (16.402)
Moment of inertia (with brake) $J_{Mot\ Br}$	kg cm^2 (lb_f-in^2)	33 (11.276)	33 (11.276)	44 (15.035)	44 (15.035)	54 (18.452)
Weight m_{Mot}	kg (lb)	13 (28.6)	13 (28.6)	15 (33.08)	15 (33.08)	17 (37.49)
Weight (with brake) $m_{Mot\ Br}$	kg (lb)	15 (33.08)	15 (33.08)	17 (37.49)	17 (37.49)	19 (41.90)
200 ... 240 V 3 AC						
Rated speed n_N	rpm	1000	1500	1000	1500	1000
Rated torque M_N	Nm (lb_f-ft)	16.6 (12.24)	15 (11.10)	20 (14.75)	18 (13.30)	23.5 (17.33)
Rated current I_N	A	7.9	10.4	10.9	12.4	13.2
Rated power P_N	W	1740	2400	2150	2750	2500
380 ... 480 V 3 AC						
Rated speed n_N	rpm	2000	3000	2000	3000	2000
Rated torque M_N	Nm (lb_f-ft)	14.5 (10.70)	11 (8.10)	17 (12.54)	12 (8.90)	19.1 (14.09)
Rated current I_N	A	7	7.7	9.3	8.5	10.8
Rated power P_N	W	3050	3500	3550	3700	4000
Suitable for SINAMICS S210 servo converter						
• 200 ... 240 V 3 AC		6SL3210-5HE13-5UF0	6SL3210-5HE15-0UF0	6SL3210-5HE15-0UF0	6SL3210-5HE17-0UF0	6SL3210-5HE17-0UF0
• 380 ... 480 V 3 AC		6SL3210-5HE13-5UF0	6SL3210-5HE15-0UF0	6SL3210-5HE15-0UF0	6SL3210-5HE17-0UF0	6SL3210-5HE17-0UF0

© Siemens 2022

Technical specifications

Dimensional drawing

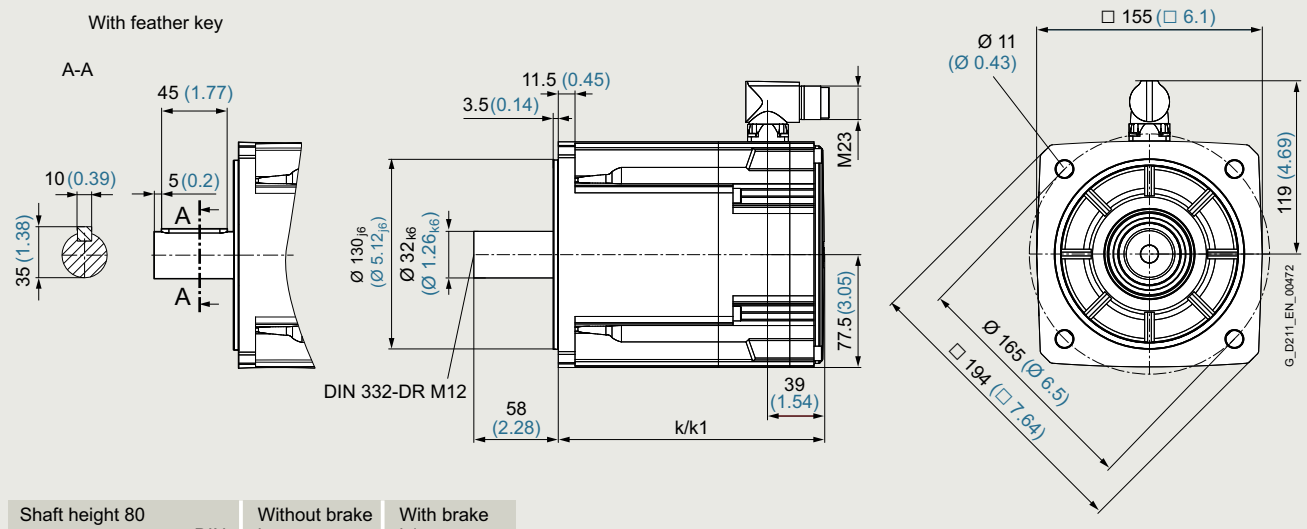

Shaft height 80 DIN IEC	Without brake k LB	With brake k1 LB1
1FT2208-3A…	183 (7.2)	236 (9.29)
1FT2208-4A…	203 (7.99)	256 (10.08)
1FT2208-5A…	223 (8.78)	276 (10.87)

All dimensions in mm (values in brackets are in inches).

© Siemens 2022

Technical specifications

Speed/torque characteristics

Compact

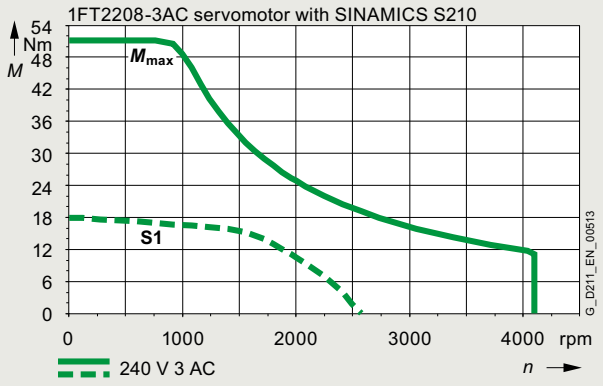

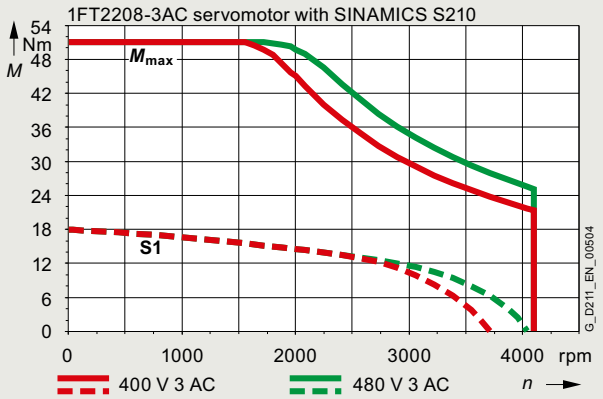

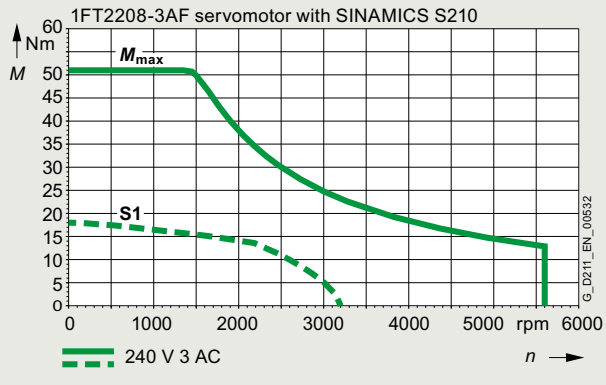

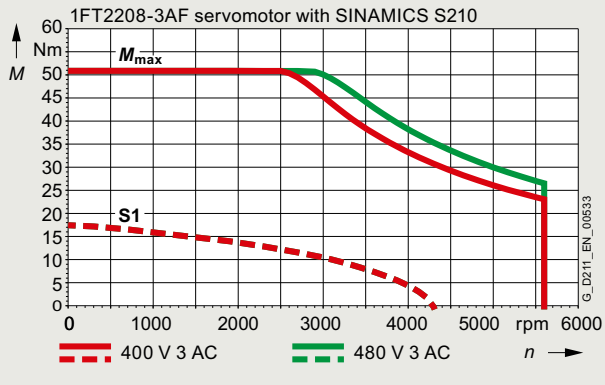

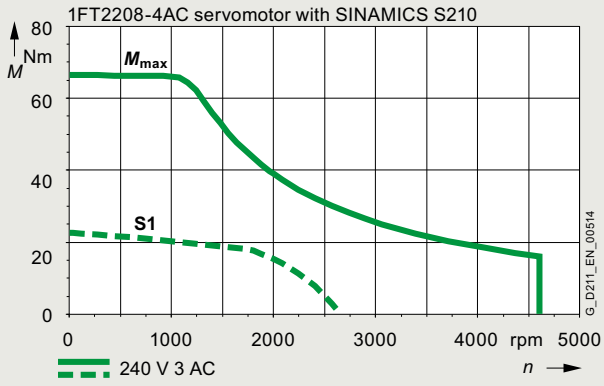

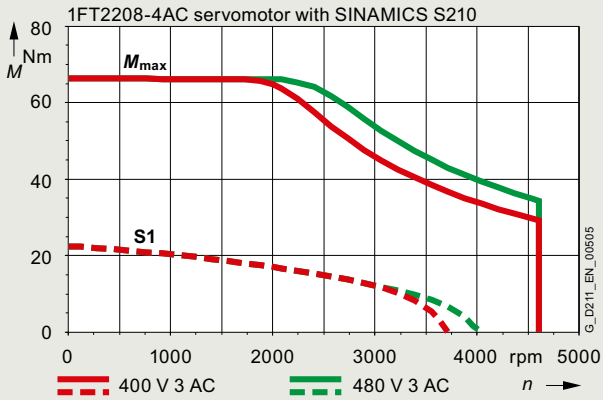

© Siemens 2022

Technical specifications

Speed/torque characteristics (continued)

Compact (continued)

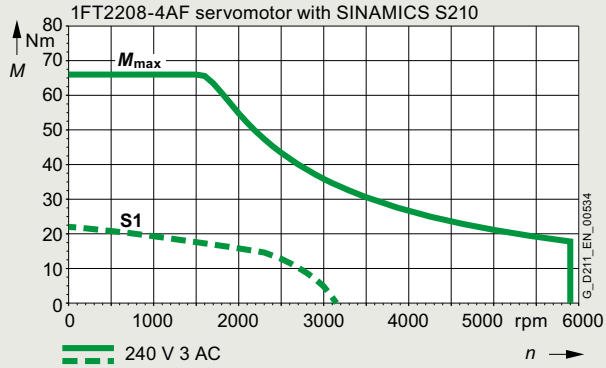

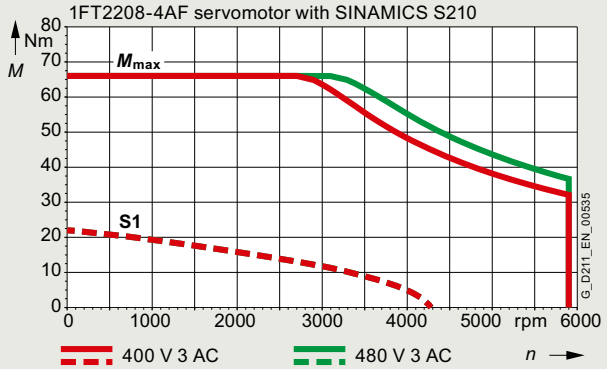

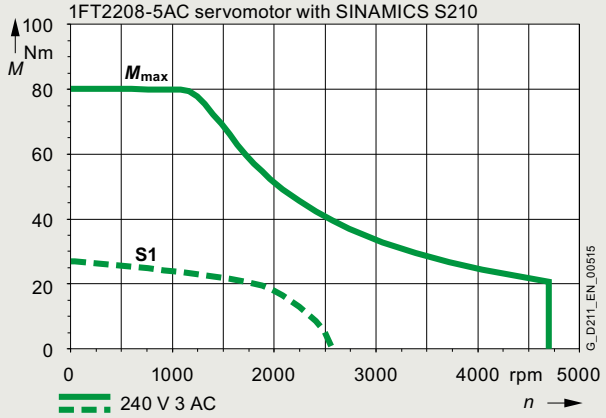

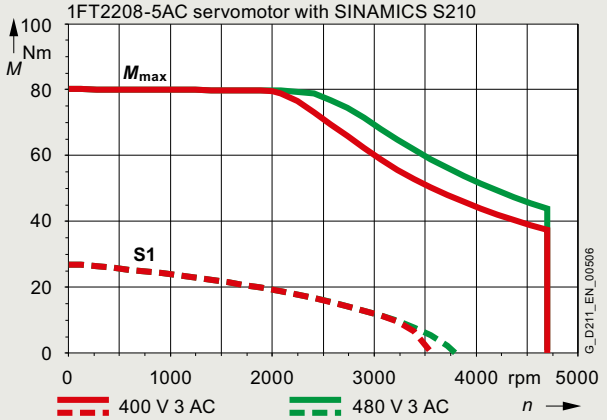

© Siemens 2022

Technical specifications

SIMOTICS S-1FT2 shaft height 100

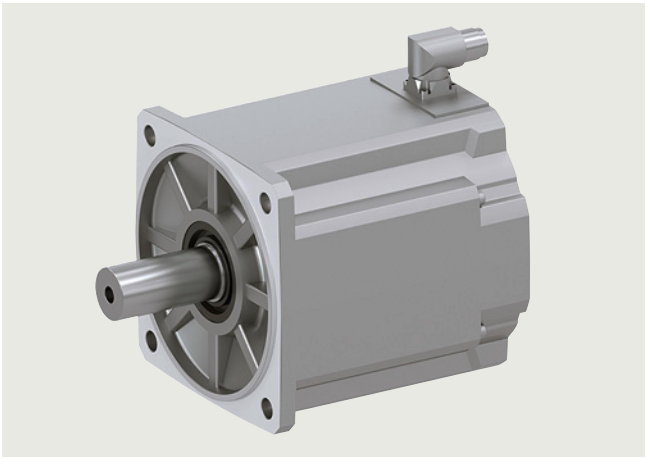

Specific technical specifications

SIMOTICS S-1FT2 servomotors		Compact			
Shaft height 100		**1FT2210-3AB**	**1FT2210-3AC**	**1FT2210-4AB**	**1FT2210-4AC**
Static torque M_0	Nm (lb_f-ft)	30 (22.13)	30 (22.13)	40 (29.50)	40 (29.50)
Stall current I_0	A	8.5	15	12	15
Maximum torque M_{max}	Nm (lb_f-ft)	90 (66.38)	90 (66.38)	120 (88.51)	120 (88.51)
Maximum current I_{max}	A	31.5	55	43.5	55
Maximum speed n_{max}	rpm	2500	4400	2500	3300
Rotor moment of inertia J_{Mot}	kg cm^2 (lb_f-in^2)	89 (30.411)	89 (30.411)	120 (41.004)	120 (41.004)
Moment of inertia (with brake) $J_{Mot\ Br}$	kg cm^2 (lb_f-in^2)	95 (32.462)	95 (32.462)	130 (44.421)	130 (44.421)
Weight m_{Mot}	kg (lb)	22 (48.51)	22 (48.51)	27 (59.54)	27 (59.54)
Weight (with brake) $m_{Mot\ Br}$	kg (lb)	25 (55.13)	25 (55.13)	31 (68.36)	31 (68.36)
200 ... 240 V 3 AC					
Rated speed n_N	rpm	750	1000	750	1000
Rated torque M_N	Nm (lb_f-ft)	30 (22.13)	30 (22.13)	39 (28.77)	37 (27.29)
Rated current I_N	A	8.6	15.5	11.6	14.3
Rated power P_N	W	2500	3200	3050	3900
380 ... 480 V 3 AC					
Rated speed n_N	rpm	1500	2000	1500	2000
Rated torque M_N	Nm (lb_f-ft)	28.5 (21.02)	26 (19.18)	34.5 (25.45)	30.5 (22.50)
Rated current I_N	A	8.3	13.5	10.4	11.8
Rated power P_N	W	4500	5500	5400	6400
Suitable for SINAMICS S210 servo converter					
• 200 ... 240 V 3 AC		6SL3210-5HE13-5UF0	6SL3210-5HE17-0UF0	6SL3210-5HE15-0UF0	6SL3210-5HE17-0UF0
• 380 ... 480 V 3 AC		6SL3210-5HE13-5UF0	6SL3210-5HE17-0UF0	6SL3210-5HE15-0UF0	6SL3210-5HE17-0UF0

© Siemens 2022

Technical specifications

Dimensional drawing

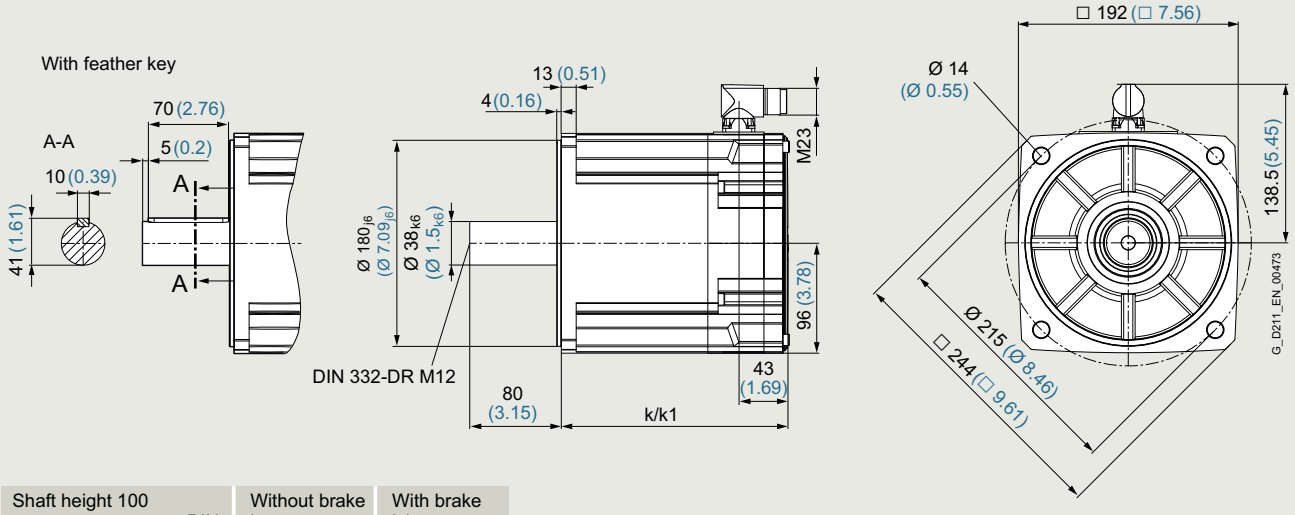

Shaft height 100 DIN IEC	Without brake k LB	With brake k1 LB1
1FT2210-3A…	198 (7.8)	257 (10.12)
1FT2210-4A…	223 (8.78)	282 (11.1)

All dimensions in mm (values in brackets are in inches).

© Siemens 2022

Technical specifications

Speed/torque characteristics

Compact

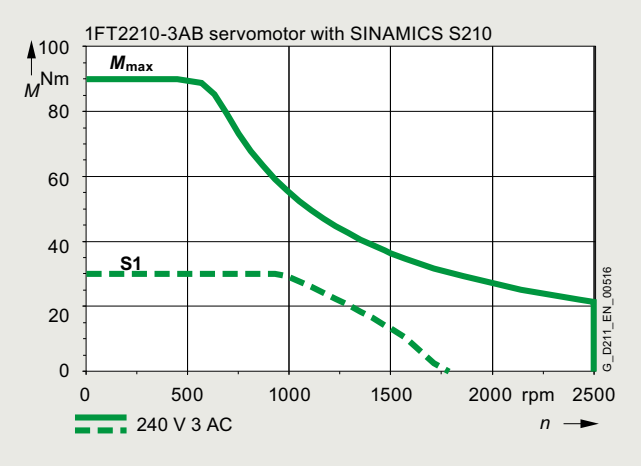

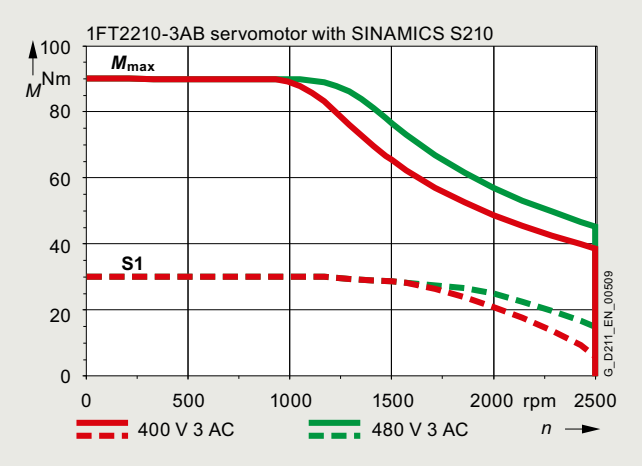

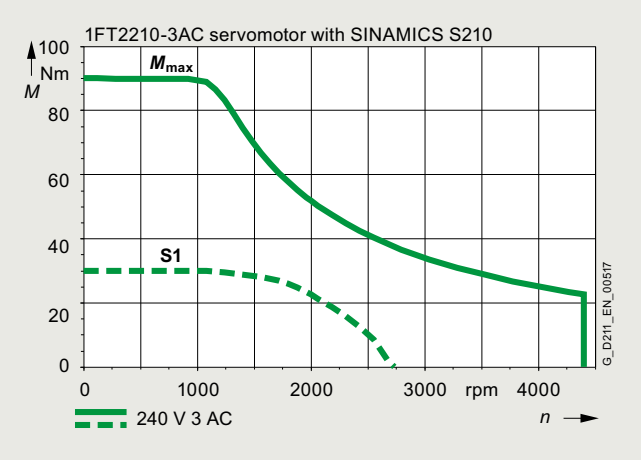

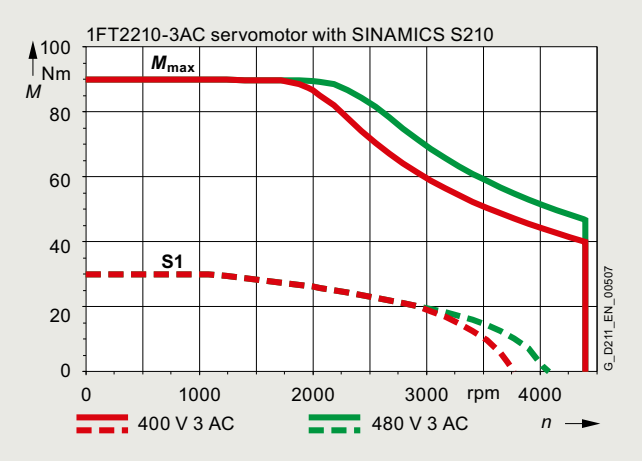

© Siemens 2022

Technical specifications

Speed/torque characteristics (continued)

Compact (continued)

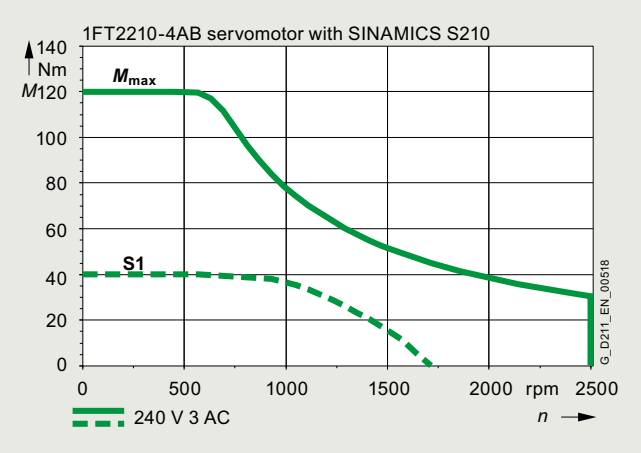

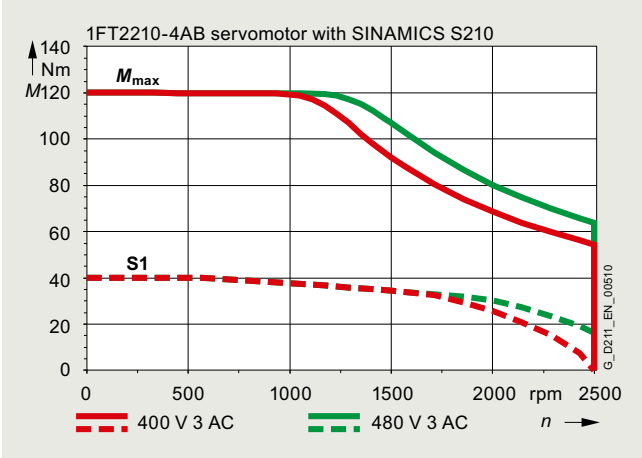

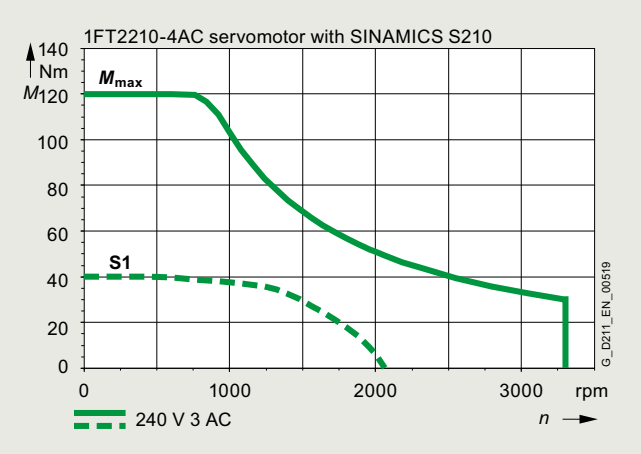

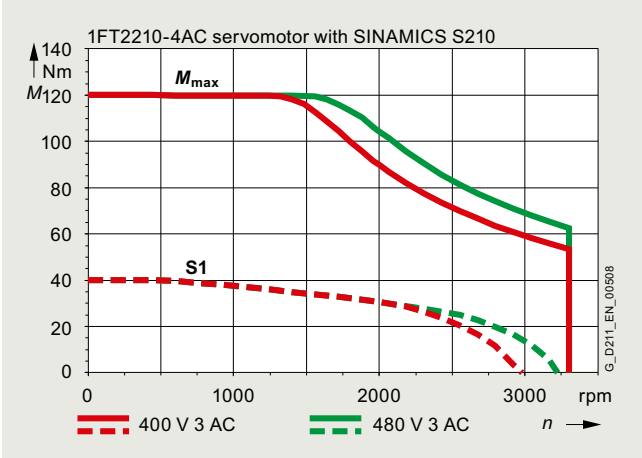

© Siemens 2022

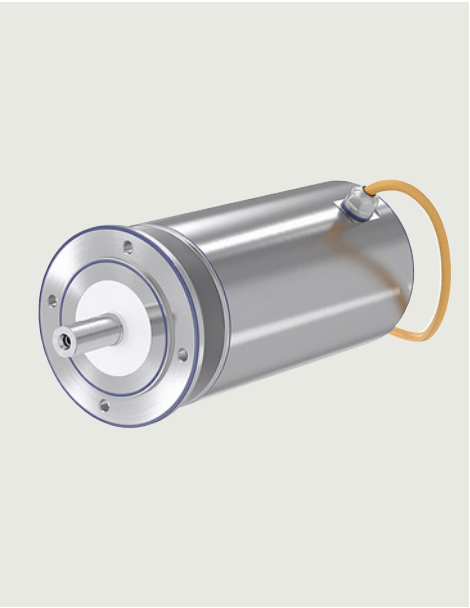

3.3/2 Overview
3.3/2 Benefits
3.3/2 Application
3.3/3 Selection and ordering data
3.3/4 Technical specifications
3.3/4 General technical specifications
3.3/8 Shaft height 40
3.3/10 Shaft height 52
3.3/12 Shaft height 63
3.3/14 Shaft height 80

Detailed technical information on the SINAMICS S210 servo drive system is available on the internet at:
www.siemens.com/sinamics-s210/documentation

In addition, the Drive Technology Configurator (DT Configurator) can be used on the internet at the following address:
www.siemens.com/sinamics-s210/configuration

© Siemens 2022

Overview

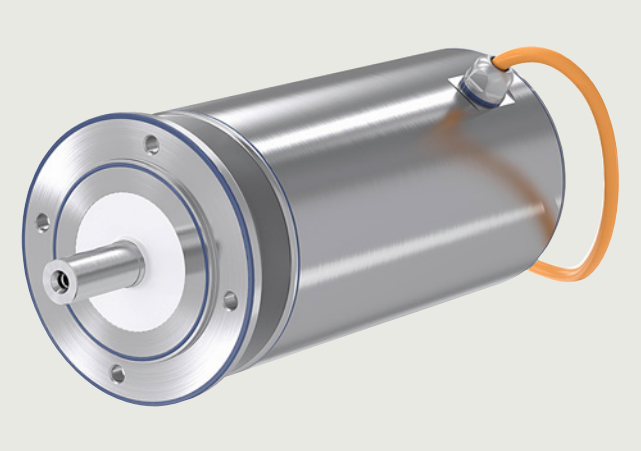

The SIMOTICS S-1FS2 servomotors are compact and highly dynamic synchronous motors, especially designed for use in food and pharmaceutical environments with the most stringent requirements for hygiene and cleanliness. They are characterized by high power density, degree of protection and overload capability, a design suitable for cleaning and the use of materials that are approved to be used in food processing.

Benefits

The SIMOTICS S-1FS2 servomotors fully exploit their strengths in the system with the SINAMICS S210 converter:

- Short adjustment and positioning times
- Quick and precise compensation of disturbances
- Stable closed loop control with high dynamic response
- Maximum flexibility in the selection
- Increased ruggedness
- Simplified cleaning

This is achieved by:

- Rapid control cycle
- High pulse frequency
- Complex rule algorithms
- Highest resolution optical encoders
- Low moment of inertia of the motors
- High overload capability
- One cable connection system

Application

- Food and beverage industry
- Pharmaceutical industry
- Packaging machines
- Handling equipment
- Feed and withdrawal devices

© Siemens 2022

Selection and ordering data

	Static torque M_0 Nm (lb_f-ft)	Maximum torque M_{max} Nm (lb_f-ft)	Maximum speed n_{max} rpm	Rated speed for 200 ... 240 V 1/3 AC n_N rpm	Rated speed for 380 ... 480 V 3 AC n_N rpm	Rotor moment of inertia without/with brake J_{Mot} kg cm² (lb_f-in²)	**SIMOTICS S-1FS2 servomotor with connection cable** Article No.	Additional order code for cable end and cable length Order code
Shaft height 40								
	3.1 (2.29)	10 (7.38)	7200	1500	3000	0.72/0.8 (0.246/0.273)	**1FS2104-6AF ■ 7- ■MZ0**	**Q■ ■**
Shaft height 52								
	7.6 (5.61)	24 (17.7)	6000	1500	3000	2.8/3.6 (0.957/1.230)	**1FS2105-6AF ■ 7- ■MZ0**	**Q■ ■**
Shaft height 63								
	14 (10.3)	42 (31)	6000	1250	2500	–/11 (–/3.759)	**1FS2106-6AE 1 7- ■MZ0**	**Q■ ■**
	14 (10.3)	42 (31)	6000	1500	3000	9/– (3.075/–)	**1FS2106-6AF 0 7- ■MZ0**	**Q■ ■**
Shaft height 80								
	23.5 (17.33)	80 (59.01)	4750	1000	2000	49/55 (16.743/18.794)	**1FS2208-5AC ■ 7- ■MZ0** NEW	**Q■ ■**

Article No. supplements			
Holding brake			
Without brake	**0**		
With brake	**1**		
Shaft extension, feather key			
Plain shaft		**0**	
Shaft with feather key		**1**	
Supplements for the additional order code			
Cable end			
Free cable ends for direct connection to the converter			**0**
Cable end with SPEED-CONNECT coupling M17 (1FS2104 and 1FS2105) or M23 (1FS2106 and 1FS2208)			**1**
Cable length			

0.5 m (1.64 ft)	**A**	6 m (19.69 ft)	**M**
1 m (3.28 ft)	**B**	6.5 m (21.33 ft)	**N**
1.5 m (4.92 ft)	**C**	7 m (22.97 ft)	**P**
2 m (6.56 ft)	**D**	7.5 m (24.61 ft)	**Q**
2.5 m (8.20 ft)	**E**	8 m (26.25 ft)	**R**
3 m (9.84 ft)	**F**	8.5 m (27.89 ft)	**S**
3.5 m (11.48 ft)	**G**	9 m (29.53 ft)	**T**
4 m (13.12 ft)	**H**	9.5 m (31.17 ft)	**U**
4.5 m (14.76 ft)	**J**	10 m (32.81 ft)	**V**
5 m (16.41 ft)	**K**	10.5 m (34.45 ft)	**W**
5.5 m (18.05 ft)	**L**	11 m (36.09 ft)	**X**

The connection cable of the SIMOTICS S-1FS2 servomotors can be extended with additional cables up to a total cable length of 50 m (164 ft). This applies to motors with the additional order code Q1.
(Cable end with SPEED-CONNECT coupling).
For further information see section MOTION-CONNECT connection systems from page 4/1.

© Siemens 2022

Technical specifications

General technical specifications

SIMOTICS S-1FS2 motors	
Motor type	Permanent-magnet synchronous motor
Permissible operating conditions without derating • Ambient temperature • Installation altitude, max.	 -15 ... +40 °C (5 ... 104 °F) 1000 m (3281 ft)
Degree of protection According to EN 60034-5 (IEC 60034-5), ISO 20653	IP66, IP67 IP69K (does not apply to the shaft outlet)
Cooling According to EN 60034-6	Natural cooling (IC410)
Type of construction According to EN 60034-7 (IEC 60034-7)	IM B5 (IM V1, IM V3)
Shaft extension According to DIN 748-3 (IEC 60072-1)	Plain shaft Optional shaft with feather key (half-key balancing)
Shaft and flange accuracy According to DIN 42955 (IEC 60072-1)	Tolerance N In each case for radial eccentricity of the shaft extension, concentricity of the centering edge, and axial eccentricity of the mounting flange to the axis of the shaft extension
Vibration severity grade According to EN 60034-14 (IEC 60034-14)	Grade A is maintained up to rated speed
Stator winding insulation According to EN 60034-1 (IEC 60034-1)	Thermal class 155 (F) for a winding overtemperature of ΔT = 100 K
Sound pressure level L_{pA} (1 m), max. According to ISO 1680 • 1FS2104 • 1FS2105 and 1FS2106 • 1FS2208	 55 dB(A) + 3 dB(A) tolerance 65 dB(A) + 3 dB(A) tolerance 70 dB(A) + 3 dB(A) tolerance
Encoder system	AM22DQC (absolute encoder 22-bit + 12-bit multiturn)
Holding brake	Optional integrated holding brake
Connection	One Cable Connection (OCC) for signals and power, open cable end for direct connection to SINAMICS converter or cable end with plug connector to connect a MOTION-CONNECT basic line
Surface	Stainless steel 1.4404, roughness < 0.8 µm
Certificates of suitability	cURus, CE, EAC, CEL, EHEDG

Regulations, standards, specifications

The motors comply with the appropriate standards and regulations, see table below.

As a result of the fact that in many countries the national regulations have been completely harmonized with the international IEC 60034-1 recommendation, there are no longer any differences with respect to coolant temperatures, temperature classes and temperature rise limits.

General specifications for rotating electrical machines	IEC 60034-1
Terminal designations and direction of rotation for electrical machines	IEC 60034-8
Types of construction of rotating electrical machines	IEC 60034-7
Cooling methods of rotating electrical machines	IEC 60034-6
Degrees of protection of rotating electrical machines	IEC 60034-5
Vibration severity of rotating electrical machines	IEC 60034-14
Noise limit values for rotating electrical machines	IEC 60034-9
Cylindrical shaft extensions for electrical machines	DIN 748-3/IEC 60072-1

SIMOTICS S-1FS2 motors have UL approval from Underwriters Laboratories Inc. and are marked with the "UL Recognized Component" test symbol. This is used for components which are a part of a larger product or system. This confirmed compliance with the corresponding US American and Canadian regulations, and allowed access to the North American market.

For SIMOTICS S-1FS2 motors, conformity with the relevant EC directives 2006/95/EC and 2014/35/EU and the relevant standards EN 60034-1:2010 and EN 60204-1:2006 is confirmed. By applying the CE mark to the product, Siemens AG confirms this for the product, and secures the free movement of goods within the European Union.

Specific standards for the food industry

The SIMOTICS S-1FS2 motors meet the EHEDG directives for "Class I EL AUX". FDA-listed plastic materials are used in the relevant exterior areas. The bearing grease is approved in accordance with NSF H1.

EHEDG certificate:
https://support.industry.siemens.com/cs/document/109805184

© Siemens 2022

Technical specifications

Degree of protection according to IEC 60034-5

A suitable degree of protection must be selected according to the operating and environmental conditions to protect the motor against damage caused by the ingress of water and other liquids, as well as dust and foreign bodies.

SIMOTICS S-1FS2 motors have degree of protection IP66/IP67 as standard.

In contrast to the degree of protection IP65, the degree of protection IP67 provides increased protection against water jets and splashing water as well as brief immersion. The mounting position of the motor must be chosen so that the stagnant water at the shaft exit is avoided.

The degree of protection designation is composed from the code IP (for International Protection) and two code numbers for the protection against touching and penetration of foreign bodies, and the degree of protection against the ingress of water.

First code number

6 Protection against dust ingress and complete protection against touching

Second code number

4: Protection against splashwater from any direction

5: Protection against jet water from any direction

6: Increased protection against powerful water jets from any direction

7: Protection against brief immersion

Degree of protection according to ISO 20653

The motor meets the IP69K requirements of the ISO 20653 standard. Deviating, the test pressure here is 3 MPa (30 bars). Using a much higher pressure for cleaning is generally not advisable in the food sector, as there is a risk of re-contaminating already cleaned system parts with the spray mist.

Chemical resistance and cleaning agents

The SIMOTICS S-1FS2 motor is resistant to a wide range of cleaning agents and processes used in the food industry.

For detailed information, such as admissible cleaning agents, see operating instructions "SINAMICS servo drive system with 1FS2":
https://support.industry.siemens.com/cs/document/109796333

Type of construction, mounting position according to IEC 60034-7

SIMOTICS S-1FS2 motors are designed in type of construction IM B5. They may also be used in the mounting positions IM V1 and IM V3.

Note:

An EHEDG-compliant V3 mounting position requires additional measures, such as a cover for the motor flange.

Code 1	IM B5	IM V1	IM V3
Code 2	IM 3001	IM 3011	IM 3031
	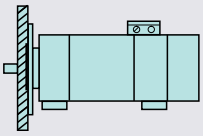	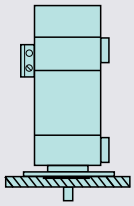	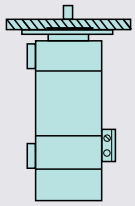
	Horizontal flange mounting	Flange mounting, output shaft pointing vertically downwards	Flange mounting, output shaft pointing vertically upwards

© Siemens 2022

Technical specifications

Shaft and flange accuracy in accordance with IEC 60072-1

Radial eccentricity tolerance of shaft in relation to housing axis
(referred to cylindrical shaft extensions)

Motor	Shaft extension D × L mm (in)	Radial eccentricity Tolerance N µm
1FS2104	19 × 40 (0.75 × 1.57)	40
1FS2105		
1FS2106	24 × 50 (0.94 × 1.97)	

Concentricity and axial eccentricity tolerance of the flange surface for the shaft axis
(referred to the centering diameter of the mounting flange)

Motor	Centering diameter mm (in)	Concentricity and axial eccentricity Tolerance N µm
1FS2104	70 (2.76)	80
1FS2105	95 (3.74)	
1FS2106	110 (4.33)	100
1FS2208	130 (5.12)	

Test: runout

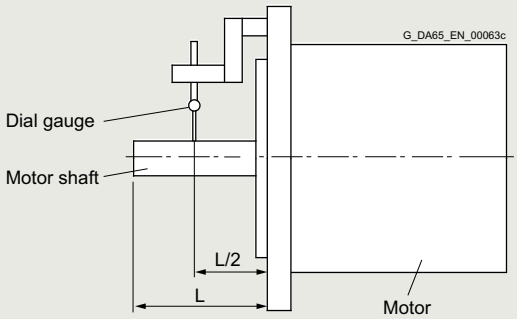

Test: concentricity

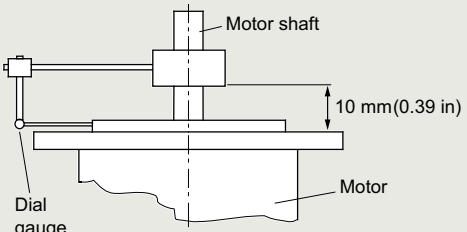

Test: perpendicularity

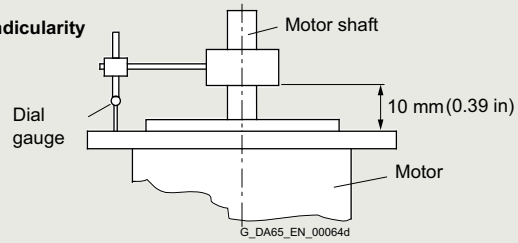

Vibration severity and vibration severity grade A according to IEC 60034-14

The vibration severity is the RMS value of the vibration velocity (frequency range from 10 Hz to 1000 Hz). The vibration severity is measured using electrical measuring devices according to DIN 45666.

The specified values refer only to the motor. These values can increase as a result of the overall system vibrational behavior due to installation.

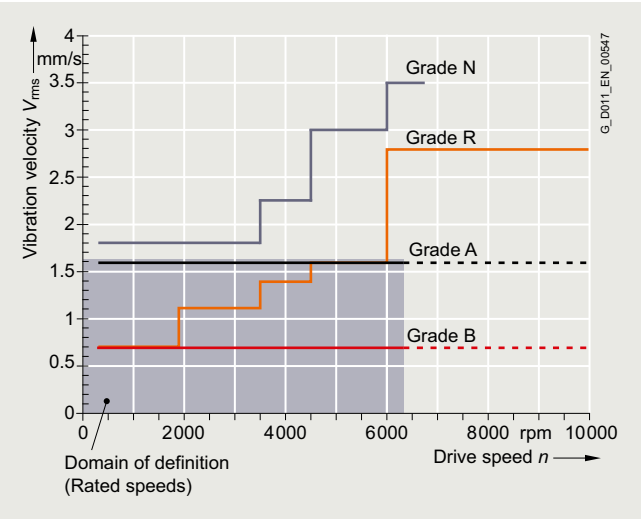

Vibration severity limit values

The speeds of 1800 rpm and 3600 rpm and the associated limit values are specified according to IEC 60034-14.
The speeds of 4500 rpm and 6000 rpm and the specified values are defined by the motor manufacturer.

The motors maintain vibration severity grade A up to the rated speed.

Balancing according to ISO 21940-32

Apart from the balance quality of the motor, the vibrational quality of motors with attached belt pulleys is mainly determined by the balance state of the mounted component. If the motor and the mounted component are balanced separately before being joined, the balancing process of the belt pulley is to be adapted to the motor's balancing type.

SIMOTICS S-1FS2 motors with feather keys are always half-key balanced. In general, motors with a plain shaft are recommended for systems with the most stringent vibrational quality requirements.

© Siemens 2022

Technical specifications

Vibration stress, immitted vibration values

The requirements of environmental class 3M8 (according to EN 60721-3-3 Table 6) must be maintained for proper function and safeguard the bearing life. The following limits are valid for (immitted) vibration values introduced into the motor from outside:

- Vibration velocity V_{rms} according to ISO 10816, max. 4.5 mm/s (0.18 in/s)
- Vibration acceleration a_{peak} axial and radial 50 m/s^2 (164 ft/s^2)

During transport, the motors withstand single shocks (6 ms) of up to 250 m/s^2 (820 ft/s^2).

Ambient temperature and installation altitude

Operating range without restrictions:

Temperature range from -15 °C to +40 °C (5.0 °F to 104 °F), installation altitude up to 1000 m (3281 ft).

If deviating conditions are encountered, the S1 characteristic of the motor must be adapted with regard to speed and torque.

Use the following equation to calculate the reduced S1 characteristic:
$S1_{red}\,(n) = x_D \times S1_{40°C;\ 1000m}\,(n/x_D)$

Installation altitude above sea level	Derating factor x_D at an ambient temperature of					
m (ft)	5 °C (41 °F)	10 °C (50 °F)	20 °C (68 °F)	30 °C (86 °F)	40 °C (104 °F)	50 °C (122 °F)
1000 (3281)	1.16	1.14	1.1	1.05	1	0.91
2000 (6562)	1.12	1.1	1.05	1	0.95	0.84

Encoder system

In motors with integrated OCC/DRIVE-CLiQ interface, the sensor signal is already digitally prepared in the motor, and then transferred quickly and without loss to the drive system. Motors with an OCC/DRIVE-CLiQ interface simplify commissioning and diagnostics, as the motor parameters and encoder system are identified automatically.

Multiturn absolute encoder

AM22DQC: absolute encoder 22-bit + 12-bit multiturn

This encoder outputs an absolute angular position between 0° and 360° in the specified resolution. It can also count 4096 revolutions. The absolute position is also sensed in the de-energized state. With a ball screw, for example, the absolute position of the slide can be determined over a longer distance.

Holding brake

Many drives need a holding brake with an EMERGENCY STOP function for safety reasons or to meet process requirements. The brakes used on the SIMOTICS S-1FS2 motors operate on the quiescent current principle. A spring or permanent magnet exerts a tensile force on the brake armature disk. This means that the brake is closed and the motor shaft thereby stopped in a state of zero current.

An electric current that flows through a coil generates an opposing field that counteracts the force effect of the spring or permanent magnet and releases or holds open the brake. Only a limited number of braking operations can be performed for an EMERGENCY STOP or voltage failure without causing excessive wear on the holding brake. The holding brake is not an operational brake. Regular dynamic braking leads to increased wear and premature brake failure. In order to ensure the functionality and specification of the brake, neither the total operating energy nor the maximum switching energy per braking operation may be exceeded.

The brake control is already fully integrated into the SINAMICS S210 converter system, so that an external circuit is not necessary.

After an EMERGENCY STOP at the maximum single switching energy, a cooling time of at least 5 minutes is required.

The following table contains technical specifications of the holding brakes for operating on a SINAMICS S210.

Motor	Shaft height	Holding torque Nm (lb_f-ft)	Average dynamic braking torque Nm (lb_f-ft)	Maximum dynamic braking torque Nm (lb_f-ft)	Opening time ms	Closing time ms	Maximum permissible single switching energy J	Total operating energy (service life) kJ	Holding current A	Break-induced current, typ. [1] for 500 ms A
1FS2104	40	3.3 (2.43)	3.3 (2.43)	9 (6.64)	50	40	270	120	0.2	1.2
1FS2105	52	8 (5.90)	5 (3.69)	18 (13.28)	35	20	570	284	0.3	1.1
1FS2106	63	16 (11.80)	9 (6.64)	35 (25.82)	70	35	1065	774	0.35	1.1
1FS2208	80	32 (23.60)	17 (12.54)	70 (51.63)	120	40	4800	2400	0,5	1,4

[1] Typical values at an ambient temperature of 20 °C (68 °F).
At -15 °C (5 °F), the break-induced currents can increase by up to 30 %.

© Siemens 2022

Technical specifications

SIMOTICS S-1FS2 shaft height 40

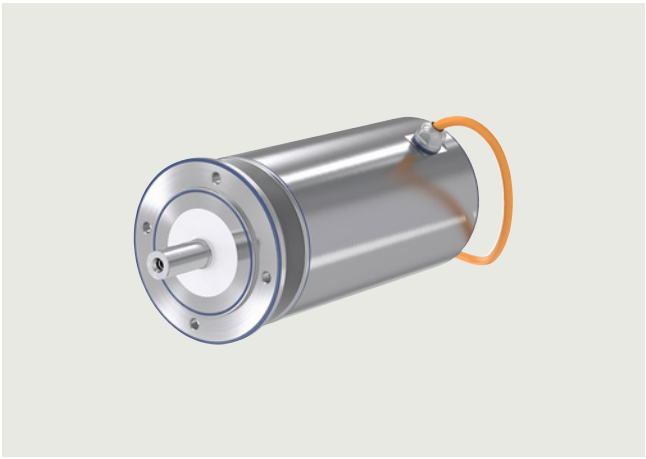

Specific technical specifications

SIMOTICS S-1FS2 servomotors		
Shaft height 40		**1FS2104-6AF**
Static torque M_0	Nm (lb_f-ft)	3.1 (2.29)
Stall current I_0	A	2.75
Maximum torque M_{max}	Nm (lb_f-ft)	10 (7.38)
Maximum current I_{max}	A	10.9
Maximum speed n_{max}	rpm	7200
Rotor moment of inertia J_{Mot}	kg cm^2 (lb_f-in^2)	0.72 (0.246)
Moment of inertia (with brake) $J_{Mot\ Br}$	kg cm^2 (lb_f-in^2)	0.8 (0.273)
Weight m_{Mot}	kg (lb)	7.2 (15.88)
Weight (with brake) $m_{Mot\ Br}$	kg (lb)	8.7 (19.18)
200 ... 240 V 1 AC / 3 AC		
Rated speed n_N	rpm	1500
Rated torque M_N	Nm (lb_f-ft)	2.85 (2.10)
Rated current I_N	A	2.7
Rated power P_N	W	450
380 ... 480 V 3 AC		
Rated speed n_N	rpm	3000
Rated torque M_N	Nm (lb_f-ft)	2.55 (1.88)
Rated current I_N	A	2.4
Rated power P_N	W	800
Suitable for SINAMICS S210 servo converter		
200 ... 240 V 1 AC		6SL3210-5HB10-8UF0
200 ... 240 V 3 AC		6SL3210-5HE11-0UF0
380 ... 480 V 3 AC		6SL3210-5HE11-0UF0

© Siemens 2022

Technical specifications

Dimensional drawing

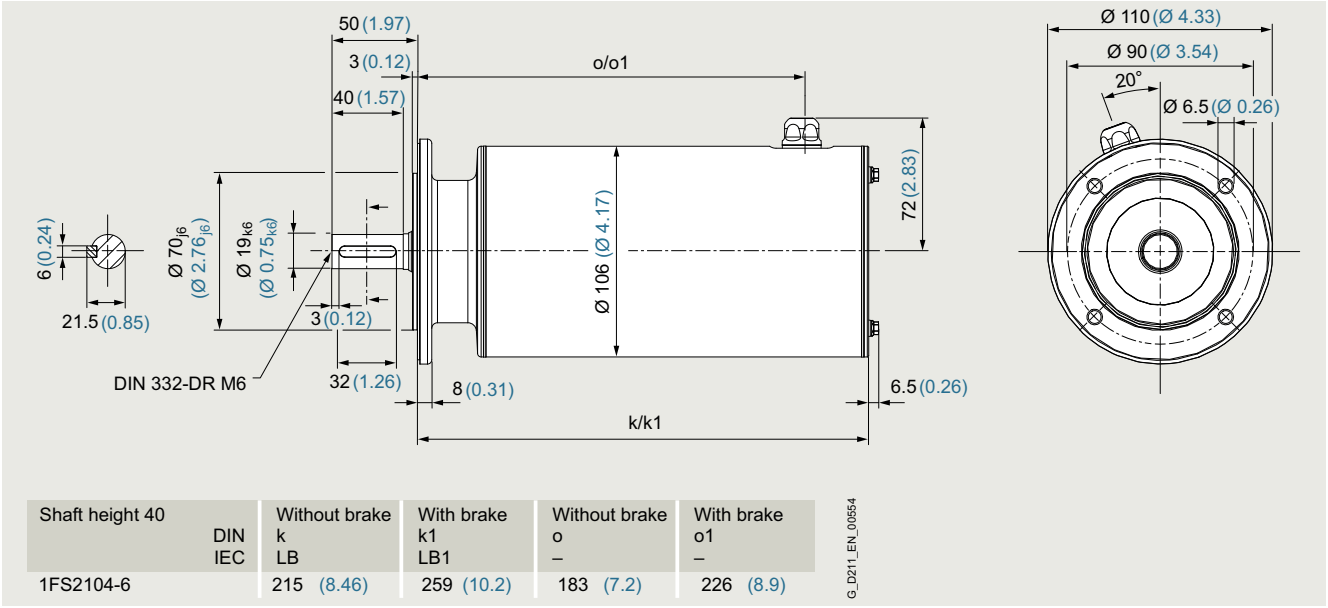

Shaft height 40		Without brake	With brake	Without brake	With brake
	DIN	k	k1	o	o1
	IEC	LB	LB1	–	–
1FS2104-6		215 (8.46)	259 (10.2)	183 (7.2)	226 (8.9)

All dimensions in mm (values in brackets are in inches).

Speed/torque characteristics

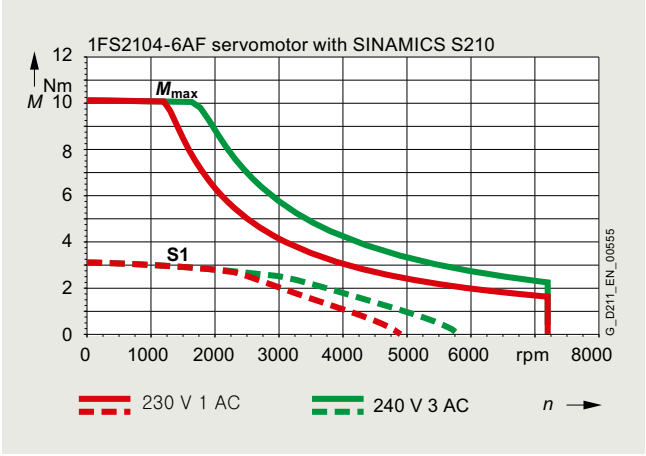

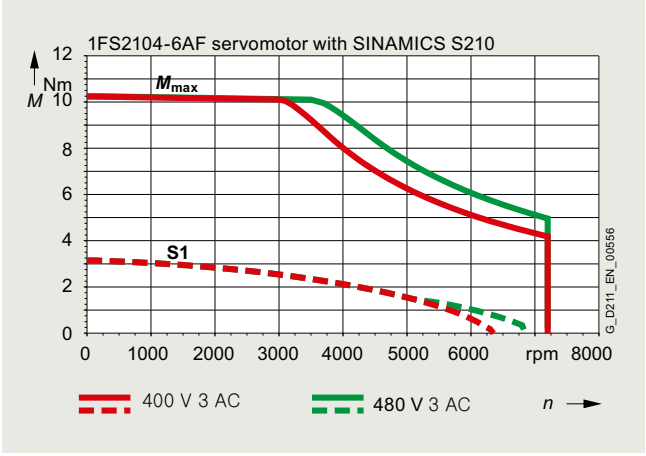

© Siemens 2022

Technical specifications

SIMOTICS S-1FS2 shaft height 52

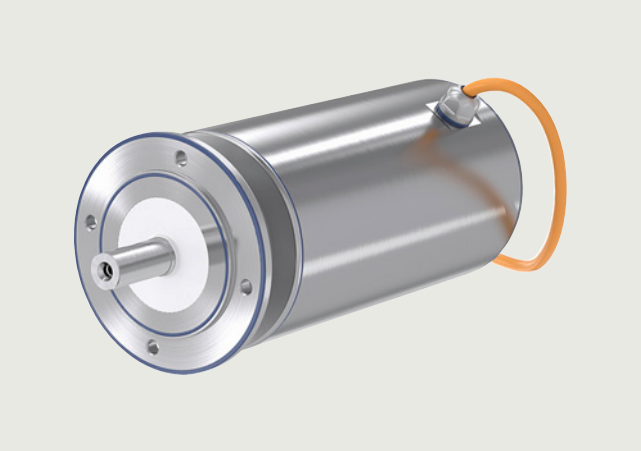

Specific technical specifications

SIMOTICS S-1FS2 servomotors		
Shaft height 52		**1FS2105-4AF**
Static torque M_0	Nm (lb_f-ft)	7.6 (5.61)
Stall current I_0	A	6.2
Maximum torque M_{max}	Nm (lb_f-ft)	24 (17.70)
Maximum current I_{max}	A	24
Maximum speed n_{max}	rpm	6000
Rotor moment of inertia J_{Mot}	kg cm^2 (lb_f-in^2)	2.8 (0.957)
Moment of inertia (with brake) $J_{Mot\ Br}$	kg cm^2 (lb_f-in^2)	3.6 (1.230)
Weight m_{Mot}	kg (lb)	13.3 (29.33)
Weight (with brake) $m_{Mot\ Br}$	kg (lb)	14.6 (32.19)
200 ... 240 V 3 AC		
Rated speed n_N	rpm	1500
Rated torque M_N	Nm (lb_f-ft)	6.2 (4.57)
Rated current I_N	A	5.5
Rated power P_N	W	980
380 ... 480 V 3 AC		
Rated speed n_N	rpm	3000
Rated torque M_N	Nm (lb_f-ft)	4.1 (3.02)
Rated current I_N	A	3.7
Rated power P_N	W	1290
Suitable for SINAMICS S210 servo converter		
200 ... 240 V 3 AC		6SL3210-5HE12-0UF0
380 ... 480 V 3 AC		6SL3210-5HE12-0UF0

© Siemens 2022

Technical specifications

Dimensional drawing

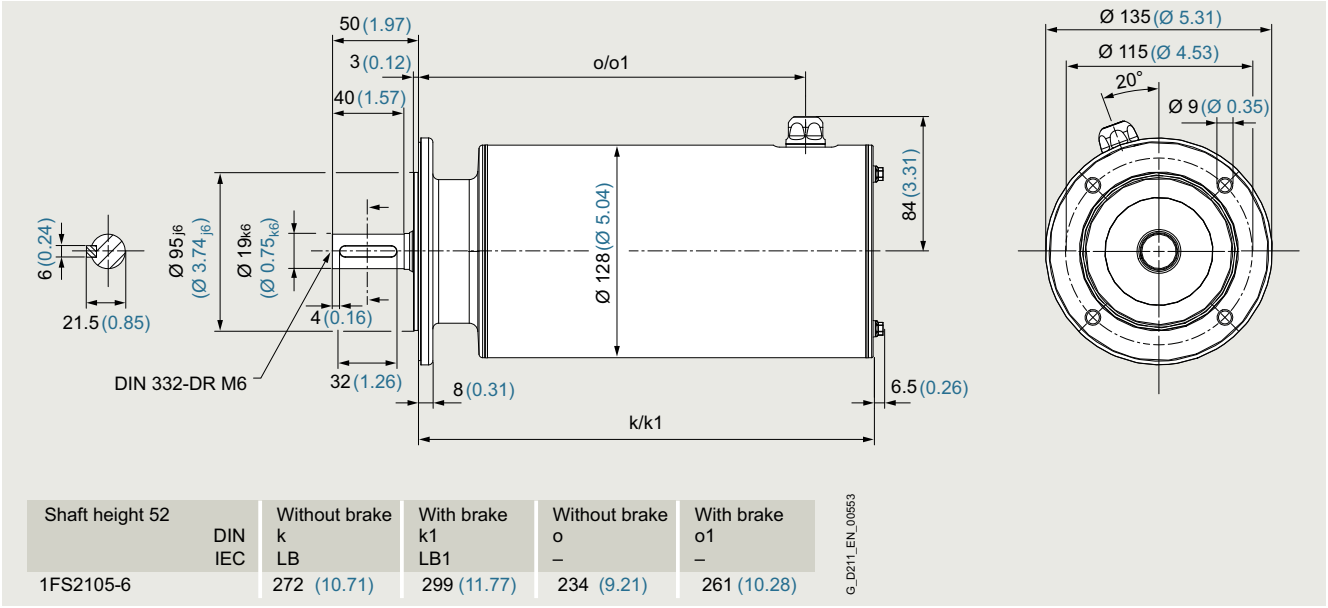

Shaft height 52	Without brake	With brake	Without brake	With brake
DIN	k	k1	o	o1
IEC	LB	LB1	–	–
1FS2105-6	272 (10.71)	299 (11.77)	234 (9.21)	261 (10.28)

All dimensions in mm (values in brackets are in inches).

Speed/torque characteristics

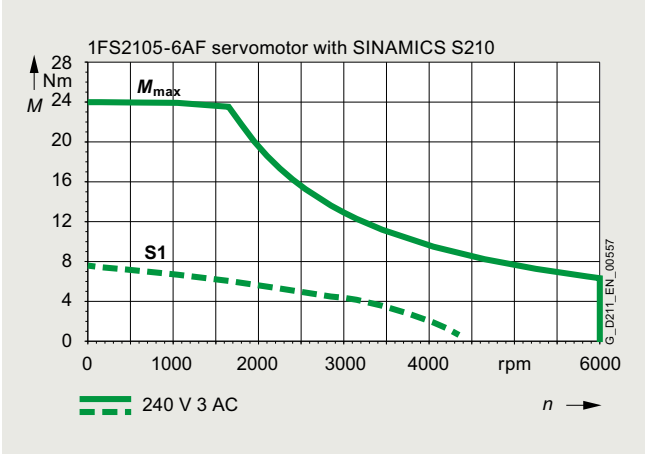

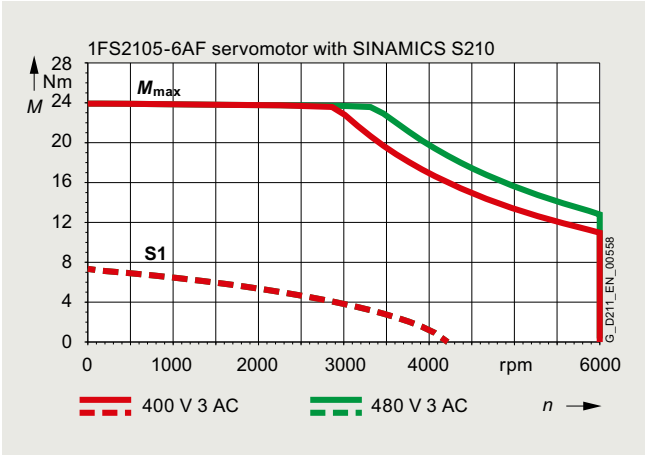

© Siemens 2022

Technical specifications

SIMOTICS S-1FS2 shaft height 63

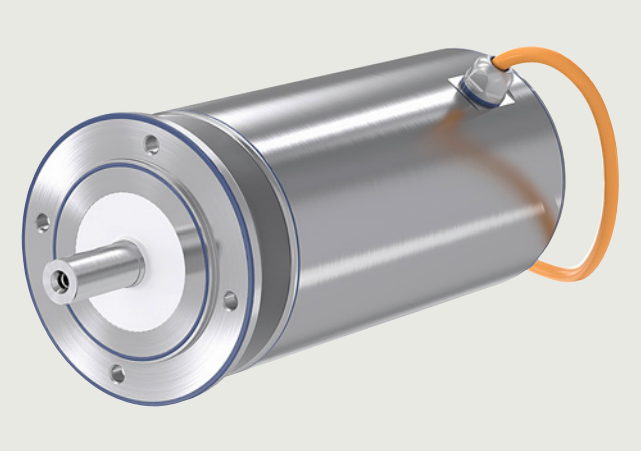

Specific technical specifications

SIMOTICS S-1FS2 servomotors			
Shaft height 63		**1FS2106-6AE1**	**1FS2106-6AF0**
Static torque M_0	Nm (lb_f-ft)	14 (10.33)	14 (10.33)
Stall current I_0	A	12.4	12.4
Maximum torque M_{max}	Nm (lb_f-ft)	42 (30.98)	42 (30.98)
Maximum current I_{max}	A	44	44
Maximum speed n_{max}	rpm	6000	6000
Rotor moment of inertia J_{Mot}	kg cm^2 (lb_f-in^2)	–	9 (3.075)
Moment of inertia (with brake) $J_{Mot\ Br}$	kg cm^2 (lb_f-in^2)	11 (3.759)	–
Weight m_{Mot}	kg (lb)	–	18.6 (41.01)
Weight (with brake) $m_{Mot\ Br}$	kg (lb)	21 (46.31)	–
200 ... 240 V 3 AC			
Rated speed n_N	rpm	1250	1500
Rated torque M_N	Nm (lb_f-ft)	11.2 (8.26)	11 (8.11)
Rated current I_N	A	10	10.3
Rated power P_N	W	1470	1730
380 ... 480 V 3 AC			
Rated speed n_N	rpm	2500	3000
Rated torque M_N	Nm (lb_f-ft)	6.9 (5.09)	6.2 (4.57)
Rated current I_N	A	6.5	6
Rated power P_N	W	1810	1950
Suitable for SINAMICS S210 servo converter			
200 ... 240 V 3 AC		6SL3210-5HE15-0UF0	6SL3210-5HE15-0UF0
380 ... 480 V 3 AC		6SL3210-5HE15-0UF0	6SL3210-5HE15-0UF0

© Siemens 2022

Technical specifications

Dimensional drawing

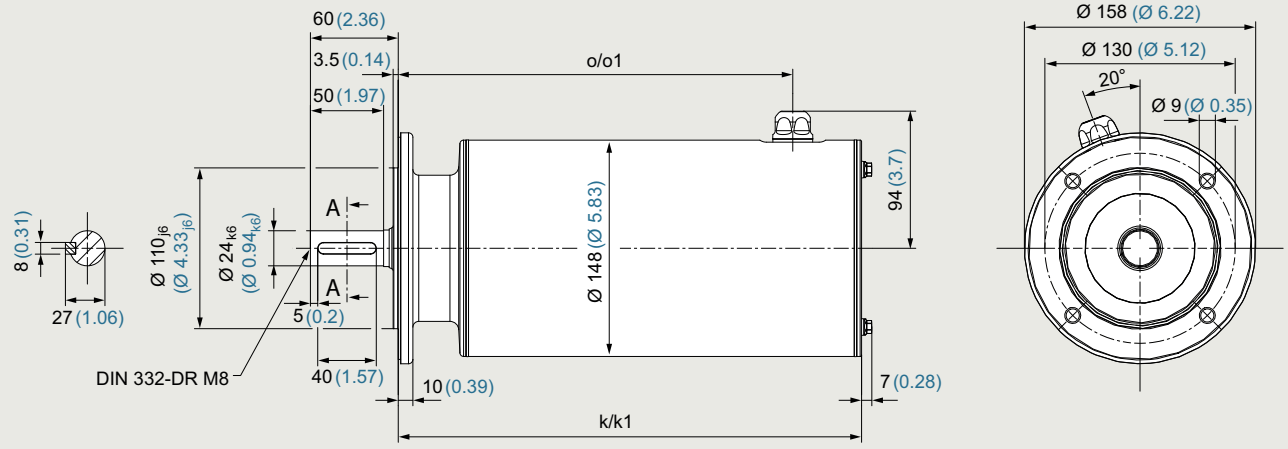

Shaft height 63 DIN IEC	Without brake k LB	With brake k1 LB1	Without brake o –	With brake o1 –
1FS2106-6AF07	265 (10.43)	-	230 (9.06)	-
1FS2106-6AE17	-	317 (12.48)	-	282 (11.1)

G_D211_EN_00552

All dimensions in mm (values in brackets are in inches).

Speed/torque characteristics

Motor with holding brake

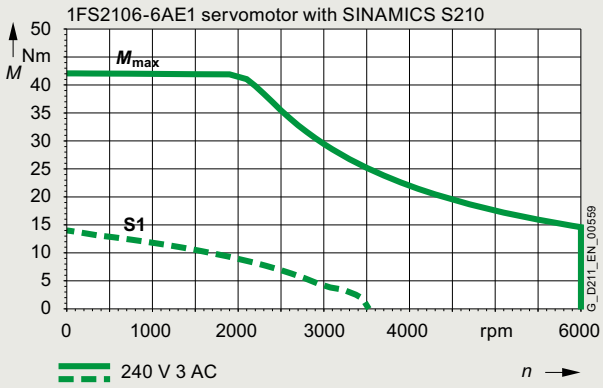

Motor without holding brake

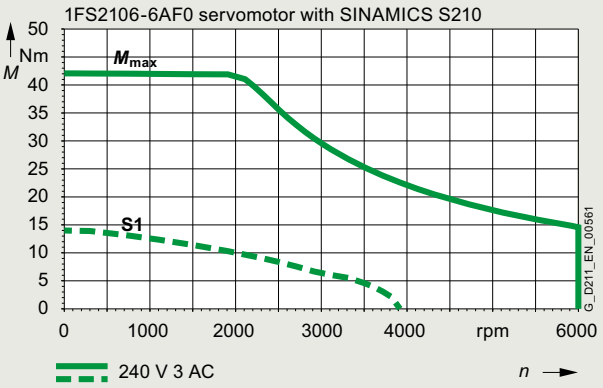

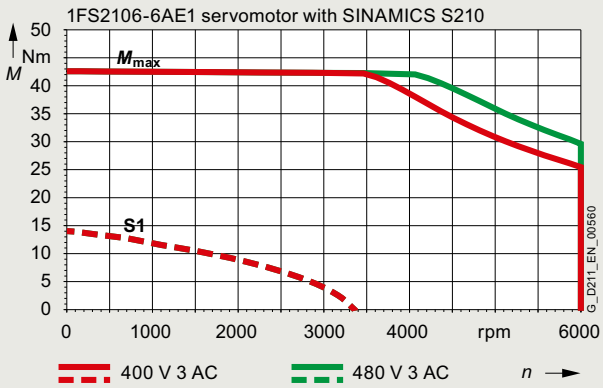

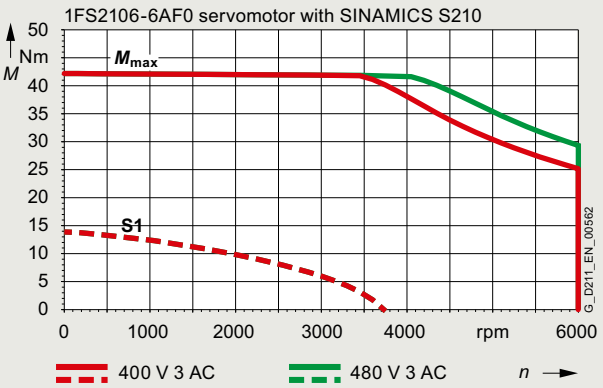

© Siemens 2022

Technical specifications

SIMOTICS S-1FS2 shaft height 80

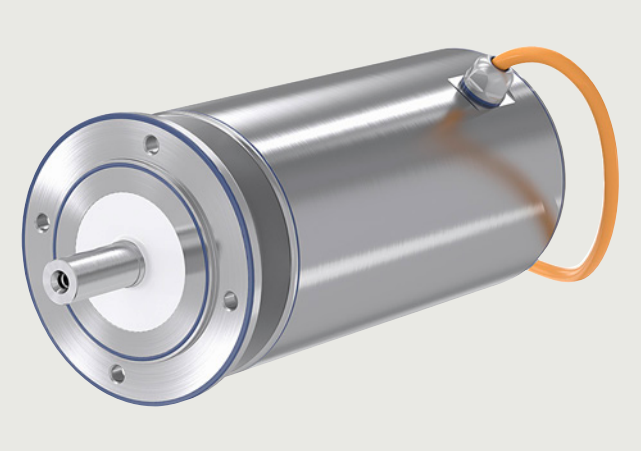

Specific technical specifications

SIMOTICS S-1FS2 servomotors		
Shaft height 80		**1FS2208-5AC**
Static torque M_0	Nm (lb_f-ft)	23.5 (17.33)
Stall current I_0	A	12.8
Maximum torque M_{max}	Nm (lb_f-ft)	80 (59.01)
Maximum current I_{max}	A	51.5
Maximum speed n_{max}	rpm	4750
Rotor moment of inertia J_{Mot}	kg cm^2 (lb_f-in^2)	49.1 (16.777)
Moment of inertia (with brake) $J_{Mot\ Br}$	kg cm^2 (lb_f-in^2)	54.7 (18.691)
Weight m_{Mot}	kg (lb)	28 (61.74)
Weight (with brake) $m_{Mot\ Br}$	kg (lb)	32 (70.56)
200 ... 240 V 3 AC		
Rated speed n_N	rpm	1000
Rated torque M_N	Nm (lb_f-ft)	19.5 (14.38)
Rated current I_N	A	11.1
Rated power P_N	W	2040
380 ... 480 V 3 AC		
Rated speed n_N	rpm	2000
Rated torque M_N	Nm (lb_f-ft)	12 (8.85)
Rated current I_N	A	7.1
Rated power P_N	W	2510
Suitable for SINAMICS S210 servo converter		
200 ... 240 V 3 AC		6SL3210-5HE17-0UF0
380 ... 480 V 3 AC		6SL3210-5HE17-0UF0

© Siemens 2022

Technical specifications

Dimensional drawing

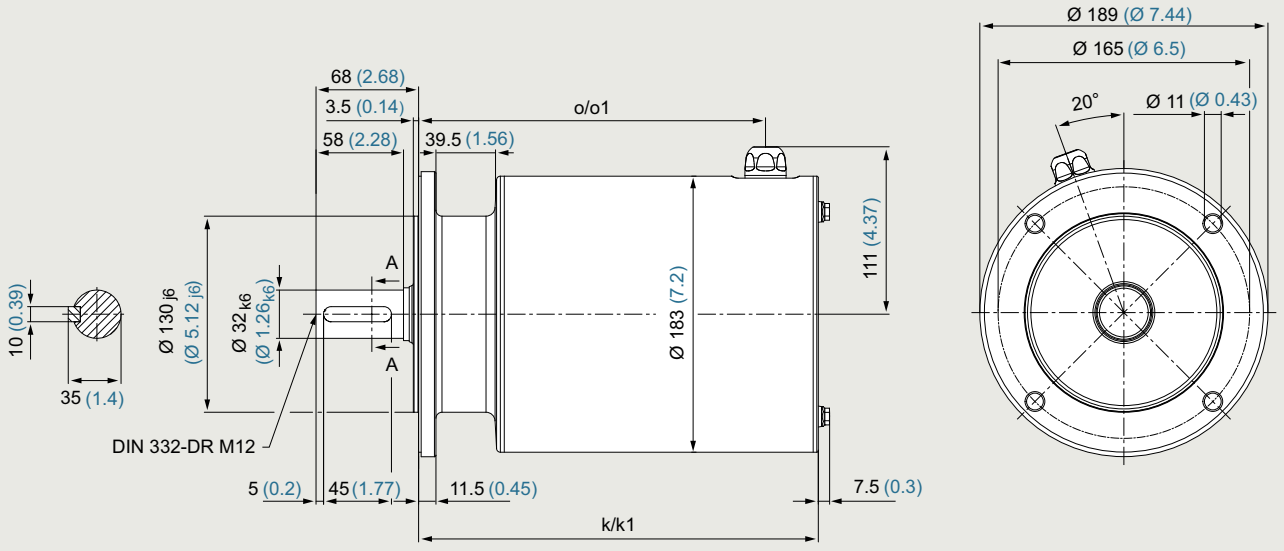

Shaft height 80 DIN IEC	Without brake k LB	With brake k1 LB1	Without brake o –	With brake o1 –
1FS2208-5AC07	265 (10.43)	-	230 (9.06)	-
1FS2208-5AC17	-	318 (12.52)	-	283 (11.14)

All dimensions in mm (values in brackets are in inches).

Speed/torque characteristics

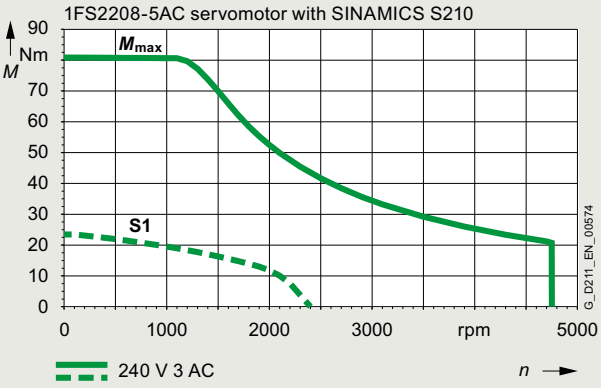

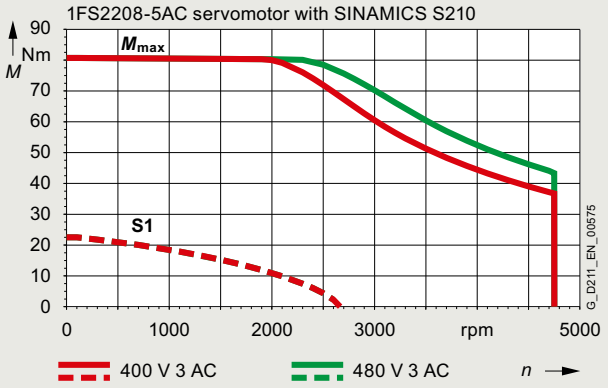

© Siemens 2022

Notes

© Siemens 2022

3.4/2 Overview
3.4/6 Technical specifications
3.4/6 General technical specifications for NRB, NRK and NLC gearboxes
3.4/7 Gearbox type NRB
3.4/13 Gearbox type NRK
3.4/17 Gearbox type NLC
3.4/21 Selection and ordering data
3.4/21 Notes on the selection
3.4/25 for servo converters with line connection 230 V 1 AC / 240 V 3 AC
3.4/26 Gearbox type NRB040
3.4/28 Gearbox type NRB060
3.4/32 Gearbox type NRB080
3.4/37 Gearbox type NRB120
3.4/42 Gearbox type NRB160
3.4/44 Gearbox type NRK050
3.4/45 Gearbox type NRK070
3.4/48 Gearbox type NRK090
3.4/51 Gearbox type NRK120
3.4/54 Gearbox type NRK155
3.4/56 Gearbox type NLC060
3.4/59 Gearbox type NLC080
3.4/62 Gearbox type NLC120
3.4/65 for servo converters with line connection 400 V 3 AC
3.4/66 Gearbox type NRB060
3.4/68 Gearbox type NRB080
3.4/71 Gearbox type NRB120
3.4/75 Gearbox type NRB160
3.4/77 Gearbox type NRK070
3.4/79 Gearbox type NRK090
3.4/81 Gearbox type NRK120
3.4/84 Gearbox type NRK155
3.4/86 Gearbox type NLC060
3.4/88 Gearbox type NLC080
3.4/90 Gearbox type NLC120

Detailed technical information on the SINAMICS S210 servo drive system is available on the internet at:
www.siemens.com/sinamics-s210/documentation

In addition, the Drive Technology Configurator (DT Configurator) can be used on the internet at the following address:
www.siemens.com/sinamics-s210/configuration

© Siemens 2022

Overview

SIMOTICS S-1FK2 and S-1FT2
servo planetary geared motors

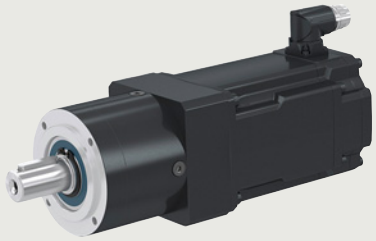

• Gearbox type NRB

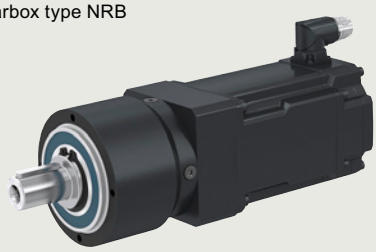

• Gearbox type NRK

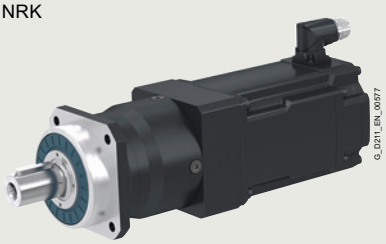

• Gearbox type NLC

SIMOTICS S-1FK2 and S-1FT2 servo planetary geared motors with the NRB, NRK and NLC gearboxes are highly dynamic, compact and cost-effective drive units. The combinations, each composed of a servomotor with a high-performance planetary gearbox, are suitable for a wide range of applications in an industrial environment.
These planetary geared motors are specified and delivered completely as a unit. All outstanding performance data are matched to the motor-gearbox combination.

Motors

High Dynamic

Wherever small masses have to be moved with maximum dynamics and precision, the 1FK2 and 1FT2 High Dynamic servomotors with low inertia really come into their own.
The lightweight and low-friction gearboxes in conjunction with inertia-optimized clamping systems allow the highest cycle rates in the application.

Compact

If larger loads need to be moved with precision and dynamically, a motor version with higher inertia is unavoidable for controllable operations. The 1FK2 and 1FT2 Compact servomotors with medium inertia and planetary gearboxes with higher transmission ratios enable even difficult inertia conditions to be mastered in terms of the control technology.

Gearboxes

The three planetary gearboxes NRB, NRK, and NLC can be mounted in all spatial positions without restriction and are maintenance-free thanks to their life-long lubrication.

NRB

NRB is the lightest gearbox with the highest power density. Thanks to its low friction bearing design it is suitable for high speeds and only generates a slight amount of heat.

Application areas:

- Packaging
- Food industry
- Pharmaceutical and medical systems
- Auxiliary axes in machine tools

NRK

The NRK series gearbox is suitable for higher radial and axial forces due to the large output bearing. This gearbox is also suitable for higher speeds thanks to low internal friction.

Application areas:

- Automation and mounting technology
- Packaging
- Auxiliary axes in machine tools

NLC

Thanks to the preloaded tapered roller bearing, the NLC gearbox has a high degree of rigidity and is perfectly suited for high radial and axial loads. The IP65 cover provides protection against dust and water.

Application areas:

- Automation and mounting technology
- Packaging
- Food industry
- Printing industry
- Auxiliary axes in machine tools

© Siemens 2022

Overview

		Gearbox type **NRB**	**NRK**	**NLC**
SIMOTICS S-1FK2 and S-1FT2 servo planetary geared motors				
Transmission ratio *i*		3 ... 320	3 ... 100	3 ... 100
Gearbox stages *z*		1, 2 and 3-stage	1 and 2-stage	1 and 2-stage
Torsional backlash φ_2	'	6 ... 22	8 ... 20	7 ... 10
Gearbox type • Eco planetary gearbox • Straight gearing • Life-long grease lubrication • Average torsional backlash		IM B14 IP64 High input speeds thanks to low-friction bearing design 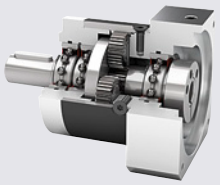	IM B14 IP64 Large ball bearing, optimized for high radial and axial forces 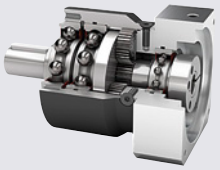	IM B5 IP65 Preloaded tapered roller bearing for best rigidity at highest loads 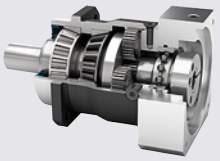
Geared motor data for 200 ... 240 V 1/3 AC				
Maximum torque M_{2max}	Nm (lb_f-ft)	1.6 ... 630 (1.18 ... 465)	1.6 ... 510 (1.18 ... 376)	3 ... 368 (2.21 ... 271)
Rated torque M_{2N}	Nm (lb_f-ft)	0.2 ... 127 (0.15 ... 93.7)	0.2 ... 210 (0.15 ... 155)	0.14 ... 120 (0.10 ... 88.5)
Rated speed n_{2N}	rpm	5 ... 1000	15 ... 1000	15 ... 500
Geared motor data for 380 ... 480 V 3 AC				
Maximum torque M_{2max}	Nm (lb_f-ft)	10.4 ... 1280 (7.67 ... 944)	10.2 ... 736 (7.52 ... 543)	9.4 ... 416 (6.93 ... 307)
Rated torque M_{2N}	Nm (lb_f-ft)	2.2 ... 650 (1.62 ... 479)	2.25 ... 450 (1.66 ... 332)	1.51 ... 240 (1.11 ... 177)
Rated speed n_{2N}	rpm	10 ... 1000	25 ... 750	30 ... 500
Suitability				
Power density		+++	++	++
Bearing loading capacity		+	++	+++
Suitable for high speeds		++	++	+
Degree of protection		+	+	++
Options				
Plain shaft / solid shaft with feather key		✓ / ✓	✓ / ✓	✓ / ✓
Standard lubrication / food-grade lubricant		✓ / ✓	✓ / ✓	✓ / ✓

© Siemens 2022

Overview

Structure of the Article No.

SIMOTICS S-1FK2 and S-1FT2 servo planetary geared motors

Basic motor — Article No.: **1F ■ 2 . 0 . - . A . ■ ■ - . ■ ■ 0 -Z**

Planetary gearbox — Order codes: **■ ■ ■ + ■ ■ ■ + ■ ■ ■**

Basic servomotor			**K**
			T
Holding brake	Without brake		**0**
	With brake		**1**
Degree of protection motor	IP64		**0**
	IP65		**1**
Motor shaft	Assignment depending on the gearbox size		
Encoder	Absolute encoder 22-bit singleturn (AS22DQC)		**S**
	Absolute encoder 22-bit + 12-bit multiturn (AM22DQC)		**M**
	Absolute encoder Singleturn 26 bit (AS26DQC)	**T** (Only for 1FT2)	**B**
	Absolute encoder 26 bit + 12 bit Multiturn (AM26DQC)	**T** (Only for 1FT2)	**C**
Connection technology	One-cable technology for SINAMICS S210 servo converter		**A**
	Two-cable technology for SINAMICS S120 servo converter		**B**

Gearbox type, gearbox size, number of gearbox stages, transmission ratio, lubrication and gearbox shaft

1. Order code – gearbox type, gearbox size and number of gearbox stages

- Gearbox type

Planetary gearbox NRB	**A**
Planetary gearbox NRK	**B**
Planetary gearbox NLC	**C**

- Gearbox size

040/050	**1**
060/070	**2**
080/090	**3**
120	**4**
155/160	**5**

- Number of gearbox stages

1-stage	**1**
2-stage	**2**
3-stage	**3**

2. Order code – transmission ratio

- Transmission ratio *i*

1-stage *i*	Order code	2-stage *i*	Order code	3-stage *i*	Order code
3	**R 0 3**	9	**R 0 9**	60	**R 6 0**
4	**R 0 4**	12	**R 1 2**	80	**R 8 0**
5	**R 0 5**	15	**R 1 5**	100	**R 0 1**
7	**R 0 7**	16	**R 1 6**	120	**R 2 1**
8	**R 0 8**	20	**R 2 0**	160	**R 6 1**
10	**R 1 0**	25	**R 2 5**	200	**R 0 2**
		32	**R 3 2**	256	**R 5 2**
		40	**R 4 0**	320	**R 2 3**
		64	**R 6 4**	512	**R 5 1**
		100	**R 0 0**		

3. Order code – gearbox lubrication and shaft design

- Gearbox lubrication + shaft design

Standard lubrication	+	Smooth solid shaft	**M 0 0**
Standard lubrication	+	Solid shaft with feather key	**M 0 1**
Food-grade lubricant	+	Smooth solid shaft	**M 1 0**
Food-grade lubricant	+	Solid shaft with feather key	**M 1 1**

Notes:
- The geared motor can only be delivered as a unit – motor plus gearbox – (no individual gearboxes).
- Not all combinations are possible.
- For shaft design with feather key, the gearbox data only applies to pulsating loads. With alternating load / reversal of direction of rotation, limitation of the torque as a function of the number of load cycles is required (see Configuration Manual).

© Siemens 2022

Overview

Possible motor-gearbox combinations

Gearbox type	Gearbox size	Motor 1FK2102 / 1FT2102 (For servo converters connected to 200 ... 240 V)	1FK2 . 03 / 1FT2 . 03 (For servo converters connected to 200 ... 240 V)	1FK2 . 04 / 1FT2 . 04 (For servo converters connected to 200 ... 240 V and 400 ... 480 V)	1FK2 . 05 / 1FT2 . 05 (For servo converters connected to 200 ... 240 V and 400 ... 480 V)	1FK2 . 06 / 1FT2 . 06 (For servo converters connected to 200 ... 240 V and 400 ... 480 V)	1FK2208 / 1FT2208 (For servo converters connected to 200 ... 240 V and 400 ... 480 V)	1FK2210 / 1FT2210 (For servo converters connected to 200 ... 240 V and 400 ... 480 V)	Order code: Number of gearbox stages 1-stage	2-stage	3-stage
NRB	040	✓	✓	–	–	–	–	–	A11	A12	A13
	060	✓	✓	✓	✓	–	–	–	A21	A22	A23
	080	–	✓	✓	✓	✓	–	–	A31	A32	A33
	120	–	✓	✓	✓	✓	✓	–	A41	A42	A43
	160	–	–	–	✓	✓	✓	–	A51	A52	A53
NRK	050	✓	✓	–	–	–	–	–	B11	B12	–
	070	✓	✓	✓	✓	–	–	–	B21	B22	–
	090	–	✓	✓	✓	✓	–	–	B31	B32	–
	120	–	✓	✓	✓	✓	✓	–	B41	B42	–
	155	–	–	–	✓	✓	✓	✓	B51	B52	–
NLC 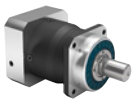	060	✓	✓	✓	✓	–	–	–	C21	C22	–
	080	–	✓	✓	✓	✓	–	–	C31	C32	–
	120	–	✓	✓	✓	✓	✓	–	C41	C42	–

Gearbox ratio

Number of gearbox stages	Transmission ratio *i*	Order code
1-stage	3	**R03**
	4	**R04**
	5	**R05**
	7	**R07**
	8	**R08**
	10	**R10**
2-stage	9	**R09**
	12	**R12**
	15	**R15**
	16	**R16**
	20	**R20**
	25	**R25**
	32	**R32**
	40	**R40**
	64	**R64**
	100	**R00**
3-stage	60	**R60**
	80	**R80**
	100	**R01**
	120	**R21**
	160	**R61**
	200	**R02**
	256	**R52**
	320	**R23**
	512	**R51**

Option for shaft

The output shaft of the planetary gearbox can be ordered as a plain shaft for a friction-locked connection or optionally with a feather key for positive transmission.
A friction-locked connection free of backlash (plain shaft) is recommended for dynamic loads, particularly during reversals in operation.
For pulsating loads without reversals, a positive feather key connection is also suitable as an alternative.

Limitation of output torques for gearbox shaft with feather key

It must be ensured that the following torques are not exceeded at the output shaft for gearboxes with feather key and changing application loads. Regardless of this, other limitations such as maximum torque $M_{2max,G}$ or the rated torque $M_{2N,G}$ of the gearbox components are maintained.

Gearbox	**Max. application torque M_2 in feather key design in Nm**	
	up to 10 million load changes	up to 100 million load changes
NRB040	9	7
NRB060	31	25
NRB080	68	54
NRB120	132	105
NRB160	401	319
NRK050	12	9
NRK070	No restriction	29
NRK090	84	67
NRK120	No restriction	190
NRK155	389	309
NLC060	37	29
NLC080	76	60
NLC120	239	190

Option for lubrication

Planetary gearboxes can be optionally ordered with a food-grade lubricant.
This lubricant was developed for the food and pharmaceutical industries for unpredictable contact with products and packaging in the food, cosmetics, pharmaceutical and animal feed industries. NSF H1 registration ensures that the lubricant is compliant with FDA 21 CFR §178.3570.

© Siemens 2022

Technical specifications

General technical specifications for NRB, NRK and NLC gearboxes

Largest average input speed $n_{1av,G}$ and maximum input speed $n_{1max,G}$

$n_{1av,G}$ – largest average input speed:
In each time window of 15 minutes, the average input speed must be below $n_{1av,G}$

$n_{1max,G}$ – maximum input speed:
The maximum input speed $n_{1max,G}$ must never be exceeded.

The maximum speeds of the mounted motor can be found in the data sheet resulting from the configuration on the DT Configurator.

Gearbox	Motor	Largest average input speed $n_{1av,G}$ in rpm	Maximum input speed $n_{1max,G}$ in rpm
NRB040 NRK050	1FK2102, 1FT2102	5000	18000
	1FK2.03, 1FT2.03	4500	18000
NRB060 NRK070 NLC060	1FK2102, 1FT2102 1FK2.03, 1FT2.03 1FK2.04, 1FT2.04	4500	13000
	1FK2.05, 1FT2.05	4000	13000
NRB080 NRK090 NLC080	1FK2.03, 1FT2.03 1FK2.04, 1FT2.04 1FK2.05, 1FT2.05	4000	7000
	1FK2.06, 1FT2.06	3500	
NRB120 NRK120 NLC120	1FK2.03, 1FT2.03 1FK2.04, 1FT2.04 1FK2.05, 1FT2.05 1FK2.06, 1FT2.06	3500	6500
	1FK2208, 1FT2208 1FK2210, 1FT2210	3000	6500
NRB160	1FK2.05, 1FT2.05 1FK2.06, 1FT2.06 1FK2208, 1FT2208 1FK2210, 1FT2210	3000	6500
NRK155			5500

© Siemens 2022

Technical specifications

Technical specifications for NRB gearbox

$M_{2N,G}$ – Rated torque for gearbox components

An endurance strength calculation becomes necessary if this torque is exceeded (see Configuration Manual).
For the feather key version, the gearbox nominal torque is only permissible as a pulsating load or a reduction must be carried out depending on the number of load changes (see Components and Options).

Transmission ratio *i*	$M_{2N,G}$ – Rated torque for gearbox components in Nm Gearbox				
	NRB040	NRB060	NRB080	NRB120	NRB160
1-stage					
3	11	28	85	115	400
4	15	38	115	155	450
5	14	40	110	195	450
7	8.5	25	65	135	–
8	6	18	50	120	450
10	5	15	38	95	–
2-stage					
9	16.5	44	130	210	–
12	20	44	120	260	800
15	18	44	110	230	700
16	20	44	120	260	800
20	20	44	120	260	800
25	18	40	110	230	700
32	20	44	120	260	800
40	18	40	110	230	700
64	7.5	18	50	120	450
3-stage					
60	20	44	110	260	–
80	20	44	120	260	–
100	20	44	120	260	–
120	18	44	110	230	–
160	20	44	120	260	–
200	18	40	110	230	–
256	20	44	120	260	–
320	18	40	110	230	–
512	7.5	18	50	120	–

© Siemens 2022

Gearbox type NRB

Technical specifications

$M_{2max,G}$ – Maximum output torque of the gearbox components

This torque must not be exceeded during operation. It is permissible for a maximum of 30000 revolutions of the output shaft. An endurance strength configuration of the gearbox becomes necessary, if the output torques up to $M_{2max,G}$ are used (see Configuration Manual).

Transmission ratio *i*	$M_{2max,G}$ – Maximum output torque of the gearbox components in Nm Gearbox				
	NRB040	NRB060	NRB080	NRB120	NRB160
1-stage					
3	17.5	45	136	184	640
4	24	61	184	248	720
5	22	64	176	312	720
7	13.5	40	104	216	–
8	10	29	80	192	720
10	8	24	61	152	–
2-stage					
9	26	70	208	336	–
12	32	70	192	416	1280
15	29	70	176	368	1120
16	32	70	192	416	1280
20	32	70	192	416	1280
25	29	64	176	368	1120
32	32	70	192	416	1280
40	29	64	176	368	1120
64	12	29	80	192	720
3-stage					
60	32	70	176	416	–
80	32	70	192	416	–
100	32	70	192	416	–
120	29	70	176	368	–
160	32	70	192	416	–
200	29	64	176	368	–
256	32	70	192	416	–
320	29	64	176	368	–
512	12	29	80	192	–

© Siemens 2022

Technical specifications

$M_{2Em.Off}$ – Emergency Off output torque of the gearbox components

The Emergency Off torque can be tolerated a maximum of 1000 times within the gearbox service life without causing unacceptable damage to the gearbox. This code can be used to check whether the torques, caused by very rare operating faults, can damage the gearbox.

Transmission ratio *i*	$M_{2Em.Off}$ – Emergency Off output torque of the gearbox components in Nm Gearbox				
	NRB040	NRB060	NRB080	NRB120	NRB160
1-stage					
3	22.5	66	180	390	800
4	30	88	240	520	900
5	36	80	220	500	900
7	26	80	178	340	–
8	27	80	190	380	900
10	27	80	200	480	–
2-stage					
9	33	88	260	500	–
12	40	88	240	520	1600
15	36	88	220	500	1400
16	40	88	240	520	1600
20	40	88	240	520	1600
25	36	80	220	500	1400
32	40	88	240	520	1600
40	36	80	220	500	1400
64	27	80	190	380	900
3-stage					
60	40	88	220	520	–
80	40	88	240	520	–
100	40	88	240	520	–
120	36	88	220	500	–
160	40	88	240	520	–
200	36	80	220	500	–
256	40	88	240	520	–
320	36	80	220	500	–
512	27	80	190	380	–

© Siemens 2022

Gearbox type NRB

Technical specifications

η_G – Efficiency of the gearbox components under full load

The exact values for the efficiency are, to some extent, dependent on the frame size of the mounted motor and can be found in the data sheet resulting from the configuration on the DT Configurator.
In the partial load range, especially when the gearbox is cold, the efficiency of the gearbox is always lower than at operating speed.
The gear losses are already taken into account in the characteristic curves and in the following characteristic data of the geared motor or its components: $M_{2,0}$, $M_{2,max}$, $M_{0,M}$, $M_{max,M}$.
A reduction of this characteristic curve and the characteristics on efficiency is not necessary.

Transmission ratio *i*	η_G – Efficiency of the gearbox components under full load in %				
	Gearbox				
	NRB040	NRB060	NRB080	NRB120	NRB160
1-stage					
3	98	98	98	98	98
4	98	98	98	98	98
5	97 ... 98	98	98	98	98
7	96 ... 97	96 ... 97	97	97	–
8	94 ... 96	95 ... 97	96 ... 97	97	97
10	92 ... 95	94 ... 96	94 ... 96	97	–
2-stage					
9	96 ... 97	96 ... 97	96 ... 97	97	–
12	95 ... 96	95 ... 96	96 ... 97	96	96
15	95 ... 96	95 ... 96	95 ... 96	96	96
16	95 ... 96	95 ... 96	95 ... 96	96	96
20	94 ... 96	94 ... 96	95 ... 96	96	96
25	93 ... 95	93 ... 95	94 ... 95	95	95
32	92 ... 95	92 ... 95	93 ... 95	95	95
40	91 ... 94	91 ... 94	92 ... 94	94	94
64	76 ... 86	78 ... 87	81 ... 89	89	90
3-stage					
60	88 ... 92	88 ... 92	88 ... 92	92	–
80	85 ... 90	86 ... 91	87 ... 91	91	–
100	83 ... 89	83 ... 89	85 ... 90	90	–
120	79 ... 87	81 ... 88	82 ... 89	88	–
160	77 ... 86	77 ... 86	80 ... 88	87	–
200	71 ... 82	72 ... 83	75 ... 85	84	–
256	69 ... 81	69 ... 81	73 ... 84	83	–
320	62 ... 76	63 ... 77	67 ... 80	79	–
512	31 ... 48	34 ... 51	38 ... 57	58	–

© Siemens 2022

Technical specifications

C_{T2} – Torsional rigidity of the gearbox (related to the output)

The exact values for the torsional rigidity are dependent on the motor-gearbox combination and can be found in the data sheet resulting from the configuration on the DT Configurator.

Transmission ratio *i*	C_{T2} – Torsional rigidity of the gearbox in Nm/ '				
	Gearbox				
	NRB040	NRB060	NRB080	NRB120	NRB160
1-stage					
3	0.65 ... 0.75	2.2 ... 2.6	7.2 ... 7.9	17.5 ... 18.5	57.5 ... 59.5
4	0.85 ... 0.95	2.4 ... 2.8	9.2 ... 10.1	19 ... 20.5	65 ... 68
5	0.9 ... 0.95	2.5 ... 2.8	9.4 ... 10.2	19.5 ... 21	66 ... 69
7	0.8 ... 0.85	2.3 ... 2.5	8.1 ... 8.7	17.5 ... 18.5	–
8	0.8 ... 0.85	2.2 ... 2.5	8 ... 8.4	17 ... 18	60 ... 62
10	0.75	2 ... 2.2	7.5 ... 7.9	15.5 ... 16.4	–
2-stage					
9	0.75 ... 0.8	2.4 ... 2.7	7.9 ... 8.4	19 ... 20	–
12	0.9 ... 1	2.5 ... 2.8	9.6 ... 10.3	20.5 ... 22	70 ... 73
15	0.9 ... 1	2.4 ... 2.7	9.5 ... 10.2	20 ... 21.5	69 ... 73
16	0.95 ... 1	2.5 ... 2.8	9.8 ... 10.5	20.5 ... 22	72 ... 75
20	0.95 ... 1	2.5 ... 2.8	9.8 ... 10.4	20.5 ... 22	72 ... 75
25	0.95 ... 1	2.5 ... 2.8	9.7 ... 10.3	20 ... 21.5	70 ... 74
32	0.95 ... 1	2.5 ... 2.8	9.7 ... 10.3	20.5 ... 22	71 ... 75
40	0.95 ... 1	2.5 ... 2.8	9.6 ... 10.2	20 ... 21.5	70 ... 73
64	0.8 ... 0.85	2.3 ... 2.5	7.9 ... 8.3	17.5 ... 18.5	61 ... 63
3-stage					
60	0.95 ... 1	2.5 ... 2.8	9.7 ... 10.3	20.5 ... 22	–
80	0.95 ... 1	2.5 ... 2.8	9.8 ... 10.5	20.5 ... 22	–
100	0.95 ... 1	2.5 ... 2.8	9.8 ... 10.4	20.5 ... 22	–
120	0.95 ... 1	2.4 ... 2.7	9.6 ... 10.2	20 ... 21.5	–
160	0.95 ... 1	2.5 ... 2.8	9.8 ... 10.4	20.5 ... 22	–
200	0.95 ... 1	2.5 ... 2.8	9.7 ... 10.3	20 ... 21.5	–
256	0.95 ... 1	2.5 ... 2.8	9.7 ... 10.3	20.5 ... 22	–
320	0.95 ... 1	2.5 ... 2.8	9.6 ... 10.2	20 ... 21.5	–
512	0.8 ... 0.85	2.3 ... 2.5	7.9 ... 8.3	17.5 ... 18.5	–

φ_2 – Torsional backlash of the gearbox on the gearbox output

Gearbox stages *z*	φ_2 – Torsional backlash of the gearbox on the gearbox output in '				
	Gearbox				
	NRB040	NRB060	NRB080	NRB120	NRB160
1-stage	15	10	7	7	6
2-stage	19	12	9	9	10
3-stage	22	15	11	11	–

Permissible shaft loading capacity

The limit values shown for the bearing load refer to equivalent forces to be determined mathematically, whose effect is equivalent to the forces occurring in the load profile.
They only apply to radial and axial loads. Axial forces up to maximum $F_A = 0.24 \times F_R$ are permissible in case of superimposition. They apply to the output speed of 100 rpm and in case of radial force for a force application point in the center of the shaft or for centrally applied axial force. For other speeds or force application points, the permissible radial forces must be obtained from the radial force diagrams of the Configuration Manual.

	Permissible shaft loading capacity, radial and axial forces in Nm				
	Gearbox				
	NRB040	NRB060	NRB080	NRB120	NRB160
Average radial force $F_{R\,eq}$					
• for L_{10h} = 20000 h	200	400	750	1750	5000
• for L_{10h} = 30000 h	160	340	650	1500	4200
Maximum radial force $F_{R\,max}$	200	700	1250	2000	5000
Average axial force $F_{A\,eq}$					
• for L_{10h} = 20000 h	200	500	1000	2500	7000
• for L_{10h} = 30000 h	160	450	900	2100	6000
Maximum axial force $F_{A\,max}$	240	800	1600	3800	11000

© Siemens 2022

Gearbox type NRB

Technical specifications

m_G – Weight of the gearbox components

The weight of the assigned motors and the total weight of the geared motors are in the data sheet resulting from the configuration of the motor or the geared motor in the DT Configurator.

Transmission ratio *i*	m_G – Weight of the gearbox components in kg										
	Gearbox										
	NRB040		NRB060			NRB080		NRB120			NRB160
	Motor										
	1FK2102 1FT2102	1FK2 . 03 1FT2 . 03	1FK2102 1FT2102 1FK2 . 03 1FT2 . 03	1FK2 . 04 1FT2 . 04	1FK2 . 05 1FT2 . 05	1FK2 . 03 1FT2 . 03 1FK2 . 04 1FT2 . 04 1FK2 . 05 1FT2 . 05	1FK2 . 06 1FT2 . 06	1FK2 . 03 1FT2 . 03 1FK2 . 04 1FT2 . 04	1FK2 . 05 1FT2 . 05 1FK2 . 06 1FT2 . 06	1FK2208 1FT2208	1FK2 . 05 1FT2 . 05 1FK2 . 06 1FT2 . 06 1FK2208 1FT2208
1-stage											
3	0.34	0.56	0.87	0.88	1.56	2.14	3.09	5.81	5.69	7.4	17.12
4	0.35	0.58	0.88	0.88	1.41	2.14	3.1	5.65	5.75	7.77	17.04
5	0.35	0.57	0.89	0.89	1.3	2.16	3.11	5.7	5.81	7.82	16.96
7	0.35	0.57	0.88	0.88	1.3	2.14	3.27	5.65	5.75	7.77	–
8	0.35	0.65	0.88	0.88	1.3	2.14	3.09	5.66	5.76	7.02	17.07
10	0.35	0.58	0.89	0.89	–	2.16	3.3	5.89	5.77	7.79	–
2-stage											
9	0.43	0.67	1.06	1.06	1.86	2.64	3.78	7.32	7.43	9.14	–
12	0.43	0.66	1.07	1.07	1.76	2.62	3.57	7.61	7.48	9.2	23.08
15	0.43	0.65	1.06	1.06	1.48	2.64	3.59	7.44	7.54	9.25	23.04
16	0.44	0.66	1.07	1.07	1.48	2.61	3.56	7.39	7.49	9.51	23.03
20	0.44	0.66	1.07	1.08	1.6	2.63	3.58	7.65	7.52	9.54	23.04
25	0.44	0.66	1.08	1.08	–	2.65	3.6	7.71	7.58	9.6	23.01
32	0.44	0.75	1.08	1.08	–	2.65	3.6	7.7	7.57	–	23.13
40	0.44	0.75	1.09	1.09	–	2.67	–	7.76	7.63	–	23.03
64	0.44	–	1.08	–	–	2.66	–	7.48	7.59	–	23.23
3-stage											
60	0.52	0.74	1.26	1.27	–	3.1	–	9.15	9.25	–	–
80	0.53	–	1.27	–	–	3.09	–	9.38	9.26	–	–
100	0.53	–	1.27	–	–	3.12	–	9.42	9.29	–	–
120	0.53	–	1.27	–	–	3.16	–	9.26	9.36	–	–
160	0.53	–	1.28	–	–	3.13	–	9.24	–	–	–
200	0.53	–	1.29	–	–	3.15	–	9.29	–	–	–
256	–	–	1.29	–	–	3.17	–	9.52	–	–	–
320	–	–	1.3	–	–	3.18	–	9.58	–	–	–

© Siemens 2022

Technical specifications

Technical specifications for NRK gearbox

$M_{2N,G}$ – Rated torque for gearbox components

An endurance strength calculation becomes necessary if this torque is exceeded (see Configuration Manual).
For the feather key version, the gearbox nominal torque is only permissible as a pulsating load or a reduction must be carried out depending on the number of load changes (see Components and Options).

Transmission ratio *i*	$M_{2N,G}$ – Rated torque for gearbox components in Nm Gearbox				
	NRK050	NRK070	NRK090	NRK120	NRK155
1-stage					
3	11	28	85	115	–
4	15	33	90	155	460
5	13	30	82	172	445
7	8.5	25	65	135	–
8	6	18	50	120	–
10	5	15	38	95	210
2-stage					
9	12	33	97	157	–
12	15	33	90	195	–
15	13	33	82	172	–
16	15	33	90	195	460
20	15	33	90	195	460
25	13	30	82	172	445
32	15	33	90	195	–
40	13	30	82	172	460
50	–	–	–	–	445
64	7.5	18	50	120	–
100	5	15	38	95	210

$M_{2max,G}$ – Maximum output torque of the gearbox components

This torque must not be exceeded during operation. It is permissible for a maximum of 30000 revolutions of the output shaft.
An endurance strength configuration of the gearbox becomes necessary, if the output torques up to $M_{2max,G}$ are used (see Configuration Manual).

Transmission ratio *i*	$M_{2max,G}$ – Maximum output torque of the gearbox components in Nm Gearbox				
	NRK050	NRK070	NRK090	NRK120	NRK155
1-stage					
3	17.5	45	136	184	–
4	24	53	144	248	736
5	21	48	131	275	712
7	13.5	40	104	216	–
8	9.5	29	80	192	–
10	8	24	61	152	336
2-stage					
9	19	53	155	251	–
12	24	53	144	312	–
15	21	53	131	275	–
16	24	53	144	312	736
20	24	53	144	312	736
25	21	48	131	275	712
32	24	53	144	312	–
40	21	48	131	275	736
50	–	–	–	–	712
64	12	29	80	192	–
100	8	24	61	152	336

© Siemens 2022

Technical specifications

$M_{2Em.Off}$ – Emergency Off output torque of the gearbox components

The Emergency Off torque can be tolerated a maximum of 1000 times within the gearbox service life without causing unacceptable damage to the gearbox. This code can be used to check whether the torques, caused by very rare operating faults, can damage the gearbox.

Transmission ratio *i*	$M_{2Em.Off}$ – Emergency Off output torque of the gearbox components in Nm Gearbox				
	NRK050	NRK070	NRK090	NRK120	NRK155
1-stage					
3	22.5	66	180	390	–
4	30	88	240	520	920
5	36	80	220	500	890
7	26	80	178	340	–
8	27	80	190	380	–
10	27	80	200	480	420
2-stage					
9	33	88	260	500	–
12	40	88	240	520	–
15	36	88	220	500	–
16	40	88	240	520	920
20	40	88	240	520	920
25	36	80	220	500	890
32	40	88	240	520	–
40	36	80	220	500	920
50	–	–	–	–	890
64	27	80	190	380	–
100	27	80	200	480	420

η_G – Efficiency of the gearbox components under full load

The exact values for the efficiency are, to some extent, dependent on the frame size of the mounted motor and can be found in the data sheet resulting from the configuration on the DT Configurator.
In the partial load range, especially when the gearbox is cold, the efficiency of the gearbox is always lower than at operating speed. The gear losses are already taken into account in the characteristic curves and in the following characteristic data of the geared motor or its components: $M_{2,0}$, $M_{2,max}$, $M_{0,M}$, $M_{max,M}$.
A reduction of this characteristic curve and the characteristics on efficiency is not necessary.

Transmission ratio *i*	η_G – Efficiency of the gearbox components under full load in % Gearbox				
	NRK050	NRK070	NRK090	NRK120	NRK155
1-stage					
3	97 ... 98	97 ... 98	98	98	–
4	97 ... 98	97 ... 98	98	98	98
5	97 ... 98	97	97 ... 98	98	98
7	95 ... 97	96 ... 97	96 ... 97	97	–
8	94 ... 96	95 ... 96	96 ... 97	97	–
10	92 ... 95	93 ... 95	94 ... 96	96	97
2-stage					
9	95 ... 96	95 ... 96	96 ... 97	96	–
12	95 ... 96	95 ... 96	95 ... 96	96	–
15	94 ... 95	94 ... 95	94 ... 96	96	–
16	94 ... 95	94 ... 95	94 ... 96	96	96
20	93 ... 95	93 ... 95	94 ... 95	95	96
25	91 ... 94	92 ... 94	92 ... 95	95	95 ... 96
32	91 ... 94	91 ... 94	92 ... 94	94	–
40	88 ... 92	89 ... 93	90 ... 94	93	94 ... 95
50	–	–	–	–	94 ... 95
64	76 ... 86	78 ... 86	81 ... 89	89	–
100	60 ... 75	67 ... 80	69 ... 82	83	84 ... 88

© Siemens 2022

Technical specifications

C_{T2} – Torsional rigidity of the gearbox (related to the output)

The exact values for the torsional rigidity are dependent on the motor-gearbox combination and can be found in the data sheet resulting from the configuration on the DT Configurator.

Transmission ratio *i*	C_{T2} – Torsional rigidity of the gearbox in Nm/ ' Gearbox				
	NRK050	NRK070	NRK090	NRK120	NRK155
1-stage					
3	0.7 ... 0.75	4 ... 5.1	9.7 ... 10.8	29.5 ... 31.5	–
4	0.9 ... 1	4.7 ... 5.7	13.6 ... 15.3	35.5 ... 38.5	65 ... 70
5	0.95 ... 1	5 ... 5.9	14 ... 15.5	36.5 ... 39.5	68 ... 72
7	0.85	4.2 ... 4.6	11.4 ... 12.2	29.5 ... 31	–
8	0.85	4.1 ... 4.5	11.1 ... 11.8	28.5 ... 30.5	–
10	0.75 ... 0.8	3.5 ... 3.8	10.1 ... 10.6	24.5 ... 25.5	54.5 ... 56.5
2-stage					
9	0.8 ... 0.85	4.7 ... 5.2	11 ... 11.7	34 ... 36.5	–
12	1 ... 1.05	5.1 ... 5.7	14.6 ... 15.7	39.5 ... 43	–
15	1 ... 1.05	4.8 ... 5.3	14.4 ... 15.5	37.5 ... 40.5	–
16	1 ... 1.05	5.2 ... 5.8	15 ... 16.1	40 ... 43.5	69 ... 73
20	1 ... 1.05	5.2 ... 5.7	15 ... 16.1	40 ... 43.5	70 ... 73
25	1 ... 1.05	5.3 ... 5.8	14.7 ... 15.8	37.5 ... 41	70 ... 73
32	1 ... 1.05	5.1 ... 5.6	14.8 ... 15.8	39.5 ... 43	–
40	1 ... 1.05	5.2 ... 5.8	14.6 ... 15.6	37.5 ... 40.5	69 ... 72
50	–	–	–	–	69 ... 73
64	0.85 ... 0.9	4.2 ... 4.6	11 ... 11.5	30 ... 31.5	–
100	0.7	3.3 ... 3.6	9.7 ... 10.1	21 ... 22	55 ... 57

φ_2 – Torsional backlash of the gearbox on the gearbox output

Gearbox stages *z*	φ_2 – Torsional backlash of the gearbox on the gearbox output in ' Gearbox				
	NRK050	NRK070	NRK090	NRK120	NRK155
1-stage	15	10	7	7	6
2-stage	19	12	9	9	9

Permissible shaft loading capacity

The limit values shown for the bearing load refer to equivalent forces to be determined mathematically, whose effect is equivalent to the forces occurring in the load profile.
They only apply to radial and axial loads. Axial forces up to maximum $F_A = 0.24 \times F_R$ are permissible in case of superimposition. They apply to the output speed of 100 rpm and in case of radial force for a force application point in the center of the shaft or for centrally applied axial force. For other speeds or force application points, the permissible radial forces must be obtained from the radial force diagrams of the Configuration Manual.

	Permissible shaft loading capacity, radial and axial forces in Nm Gearbox				
	NRK050	NRK070	NRK090	NRK120	NRK155
Average radial force $F_{R\,eq}$					
• for L_{10h} = 20000 h	800	1050	1900	2500	5200
• for L_{10h} = 30000 h	700	900	1700	2150	4600
Maximum radial force $F_{R\,max}$	1300	1650	3100	4000	8400
Average axial force $F_{A\,eq}$					
• for L_{10h} = 20000 h	1000	1350	2000	4000	7000
• for L_{10h} = 30000 h	800	1000	1500	3000	6000
Maximum axial force $F_{A\,max}$	1000	2100	3800	5900	11000

© Siemens 2022

Gearbox type NRK

Technical specifications

m_G – Weight of the gearbox components

The weight of the assigned motors and the total weight of the geared motors are in the data sheet resulting from the configuration of the motor or the geared motor in the DT Configurator.

Transmission ratio *i*	m_G – Weight of the gearbox components in kg											
	Gearbox											
	NRK050		NRK070			NRK090		NRK120			NRK155	
	Motor											
	1FK2102 1FT2102	1FK2 . 03 1FT2 . 03	1FK2102 1FT2102 1FK2 . 03 1FT2 . 03	1FK2 . 04 1FT2 . 04	1FK2 . 05 1FT2 . 05	1FK2 . 03 1FT2 . 03 1FK2 . 04 1FT2 . 04 1FK2 . 05 1FT2 . 05	1FK2 . 06 1FT2 . 06	1FK2 . 03 1FT2 . 03 1FK2 . 04 1FT2 . 04	1FK2 . 05 1FT2 . 05 1FK2 . 06 1FT2 . 06	1FK2208 1FT2208	1FK2 . 05 1FT2 . 05 1FK2 . 06 1FT2 . 06 1FK2208 1FT2208	1FK2210 1FT2210
1-stage												
3	0.61	0.83	1.41	1.41	2.1	3.27	4.4	7.62	7.5	9.21	–	–
4	0.61	0.83	1.41	1.42	1.94	3.27	4.41	7.4	7.51	9.53	16.71	22.1
5	0.61	0.84	1.42	1.42	1.95	3.28	4.23	7.67	7.55	9.56	16.74	22.13
7	0.62	0.85	1.42	1.42	1.84	3.27	4.41	7.47	7.57	9.6	–	–
8	0.61	0.92	1.42	1.43	1.96	3.3	4.28	7.71	7.58	8.85	–	–
10	0.63	0.86	1.43	1.44	–	3.33	–	7.51	7.62	9.64	16.69	22.08
2-stage												
9	0.77	0.99	1.7	1.7	2.39	3.94	5.08	9.32	9.42	11.13	–	–
12	0.77	0.99	1.71	1.71	2.51	3.93	4.88	9.55	9.42	11.14	–	–
15	0.77	0.99	1.7	1.7	2.12	3.94	4.89	9.36	9.46	11.17	–	–
16	0.77	1	1.7	1.71	2.12	3.92	5.06	9.56	9.43	11.45	22.04	27.43
20	0.77	0.99	1.71	1.71	–	3.94	5.08	9.59	9.46	11.48	22.13	27.52
25	0.77	1	1.71	1.72	–	3.95	4.9	9.63	9.5	–	22.17	27.56
32	0.77	1.08	1.72	1.72	–	3.96	–	9.41	9.51	–	–	–
40	0.78	1.08	1.72	1.72	–	3.97	–	9.68	9.55	–	22.1	–
50	–	–	–	–	–	–	–	–	–	–	22.42	–
64	0.78	–	1.73	–	–	4	–	9.49	9.59	–	–	–
100	–	–	1.88	–	–	4.06	–	9.64	–	–	22.41	–

© Siemens 2022

Technical specifications

Technical specifications for NLC gearbox

$M_{2N,G}$ – Rated torque for gearbox components

An endurance strength calculation becomes necessary if this torque is exceeded (see Configuration Manual).
For the feather key version, the gearbox nominal torque is only permissible as a pulsating load or a reduction must be carried out depending on the number of load changes (see Components and Options).

Transmission ratio *i*	$M_{2N,G}$ – Rated torque for gearbox components in Nm Gearbox		
	NLC060	NLC080	NLC120
1-stage			
3	28	85	115
4	38	115	155
5	40	110	195
7	25	65	135
8	18	50	120
10	15	38	95
2-stage			
9	44	130	210
12	44	120	260
15	44	110	230
16	44	120	260
20	44	120	260
25	40	110	230
32	44	120	260
40	40	110	230
64	18	50	120
100	15	38	95

$M_{2max,G}$ – Maximum output torque of the gearbox components

This torque must not be exceeded during operation. It is permissible for a maximum of 30000 revolutions of the output shaft.
An endurance strength configuration of the gearbox becomes necessary, if the output torques up to $M_{2max,G}$ are used (see Configuration Manual).

Transmission ratio *i*	$M_{2max.G}$ – Maximum output torque of the gearbox components in Nm Gearbox		
	NLC060	NLC080	NLC120
1-stage			
3	45	136	184
4	61	148	248
5	64	176	312
7	40	104	216
8	29	80	192
10	24	61	152
2-stage			
9	70	208	336
12	70	192	416
15	70	176	368
16	70	192	416
20	70	192	416
25	64	176	368
32	70	192	416
40	64	176	368
64	29	80	192
100	24	61	152

© Siemens 2022

Gearbox type NLC

Technical specifications

$M_{2Em.Off}$ – Emergency Off output torque of the gearbox components

The Emergency Off torque can be tolerated a maximum of 1000 times within the gearbox service life without causing unacceptable damage to the gearbox. This code can be used to check whether the torques, caused by very rare operating faults, can damage the gearbox.

Transmission ratio *i*	$M_{2Em.Off}$ – Emergency Off output torque of the gearbox components in Nm Gearbox		
	NLC060	NLC080	NLC120
1-stage			
3	66	180	390
4	88	240	520
5	80	220	500
7	80	178	340
8	80	190	380
10	80	200	480
2-stage			
9	88	260	500
12	88	240	520
15	88	220	500
16	88	240	520
20	88	240	520
25	80	220	500
32	88	240	520
40	80	220	500
64	80	190	380
100	80	200	480

η_G – Efficiency of the gearbox components under full load

The exact values for the efficiency are, to some extent, dependent on the frame size of the mounted motor and can be found in the data sheet resulting from the configuration on the DT Configurator.
In the partial load range, especially when the gearbox is cold, the efficiency of the gearbox is always lower than at operating speed. The gear losses are already taken into account in the characteristic curves and in the following characteristic data of the geared motor or its components: $M_{2,0}$, $M_{2,max}$, $M_{0,M}$, $M_{max,M}$.
A reduction of this characteristic curve and the characteristics on efficiency is not necessary.

Transmission ratio *i*	η_G – Efficiency of the gearbox components under full load in % Gearbox		
	NLC060	NLC080	NLC120
1-stage			
3	96	97	97
4	96 ... 97	97	97
5	96 ... 97	97	97
7	94 ... 95	95 ... 96	96
8	93 ... 94	94 ... 96	96
10	91 ... 93	92 ... 94	96
2-stage			
9	95 ... 96	96	96
12	94 ... 95	95 ... 96	96
15	94 ... 95	94 ... 95	96
16	94 ... 95	94 ... 96	96
20	93 ... 95	94 ... 95	95
25	92 ... 94	93 ... 95	95
32	91 ... 94	93 ... 95	95
40	90 ... 93	91 ... 94	94
64	77 ... 85	80 ... 88	89
100	66 ... 78	68 ... 81	83

© Siemens 2022

Technical specifications

C_{T2} – Torsional rigidity of the gearbox (related to the output)

The exact values for the torsional rigidity are dependent on the motor-gearbox combination and can be found in the data sheet resulting from the configuration on the DT Configurator.

Transmission ratio *i*	C_{T2} – Torsional rigidity of the gearbox in Nm/ '		
	Gearbox		
	NLC060	NLC080	NLC120
1-stage			
3	3.4 ... 4.1	8.2 ... 8.9	21.5 ... 22
4	3.9 ... 4.5	10.9 ... 11.8	24.5 ... 25.5
5	4 ... 4.6	11.2 ... 11.9	25 ... 26
7	3.5 ... 3.8	9.4 ... 9.9	21.5 ... 22
8	3.4 ... 3.7	9.2 ... 9.6	21 ... 22
10	3 ... 3.2	8.5 ... 8.9	18.5 ... 19.5
2-stage			
9	3.8 ... 4.2	9.2 ... 9.6	23.5 ... 24.5
12	4.1 ... 4.5	11.5 ... 12.1	26 ... 27.5
15	3.9 ... 4.2	11.4 ... 12	25.5 ... 26.5
16	4.2 ... 4.6	11.8 ... 12.3	26.5 ... 27.5
20	4.1 ... 4.5	11.8 ... 12.3	26.5 ... 27.5
25	4.2 ... 4.6	11.6 ... 12.1	25.5 ... 26.5
32	4.1 ... 4.5	11.5 ... 12.2	26 ... 27.5
40	4.2 ... 4.5	11.5 ... 12	25.5 ... 26.5
64	3.5 ... 3.8	9.2 ... 9.5	21.5 ... 22.5
100	2.9 ... 3.1	8.2 ... 8.5	16.7 ... 17

φ_2 – Torsional backlash of the gearbox on the gearbox output

Gearbox stages *z*	φ_2 – Torsional backlash of the gearbox on the gearbox output in '		
	Gearbox		
	NLC060	NLC080	NLC120
1-stage	10	7	7
2-stage	12	9	9

Permissible shaft loading capacity

The limit values shown for the bearing load refer to equivalent forces to be determined mathematically, whose effect is equivalent to the forces occurring in the load profile.
They only apply to radial and axial loads. Axial forces up to maximum $F_A = 0.24 \times F_R$ are permissible in case of superimposition. They apply to the output speed of 100 rpm and in case of radial force for a force application point in the center of the shaft or for centrally applied axial force. For other speeds or force application points, the permissible radial forces must be obtained from the radial force diagrams of the Configuration Manual.

	Permissible shaft loading capacity, radial and axial forces in Nm		
	Gearbox		
	NLC060	NLC080	NLC120
Average radial force $F_{R\,eq}$			
• for L_{10h} = 20000 h	3200	5500	6000
• for L_{10h} = 30000 h	3200	4800	5400
Maximum radial force $F_{R\,max}$	3200	5500	6000
Average axial force $F_{A\,eq}$			
• for L_{10h} = 20000 h	4400	6400	8000
• for L_{10h} = 30000 h	3900	5700	7000
Maximum axial force $F_{A\,max}$	4400	6400	8000

© Siemens 2022

Technical specifications

m_G – Weight of the gearbox components

The weight of the assigned motors and the total weight of the geared motors are in the data sheet resulting from the configuration of the motor or the geared motor in the DT Configurator.

Transmission ratio *i*	m_G – Weight of the gearbox components in kg							
	Gearbox							
	NLC060			NLC080		NLC120		
	Motor							
	1FK2102 1FT2102 1FK2 . 03 1FT2 . 03	1FK2 . 04 1FT2 . 04	1FK2 . 05 1FT2 . 05	1FK2 . 03 1FT2 . 03 1FK2 . 04 1FT2 . 04 1FK2 . 05 1FT2 . 05	1FK2 . 06 1FT2 . 06	1FK2 . 03 1FT2 . 03 1FK2 . 04 1FT2 . 04	1FK2 . 05 1FT2 . 05 1FK2 . 06 1FT2 . 06	1FK2208 1FT2208
1-stage								
3	1.55	1.56	2.24	3.04	4.18	7.09	6.96	8.68
4	1.56	1.57	2.09	3.04	4	6.87	6.97	8.99
5	1.56	1.57	1.98	3.06	4.19	7.18	7.06	9.08
7	1.56	1.56	1.98	3.04	3.99	7.14	7.01	9.03
8	1.56	1.56	2.09	3.04	4	6.84	6.95	8.21
10	1.57	1.57	–	3.06	4.2	7.14	7.01	9.04
2-stage								
9	1.74	1.74	2.54	3.55	4.68	8.75	8.62	10.33
12	1.76	1.76	2.56	3.52	4.47	8.56	8.66	10.37
15	1.74	1.75	2.16	3.54	4.49	8.84	8.71	10.42
16	1.75	1.76	2.28	3.51	4.65	8.79	8.66	10.68
20	1.76	1.76	2.29	3.53	4.67	8.6	8.7	10.72
25	1.76	1.76	–	3.55	4.5	8.88	8.75	10.77
32	1.76	1.77	–	3.55	4.51	8.87	8.75	–
40	1.77	1.77	–	3.57	–	8.93	8.8	–
64	1.77	–	–	4.03	–	8.82	8.7	–
100	1.75	–	–	3.61	–	8.83	–	–

© Siemens 2022

Selection and ordering data

Selection of holding brake, degree of protection motor, encoder, connection technology, gearbox lubrication and shaft design

| | | |

© Siemens 2022

Selection and ordering data

Characteristic curves of the geared motor (available via the DT Configurator)

❶ $M_{S1,M}$ – Characteristic of the largest thermally permissible effective torque of the motor component minus the gear friction and with consideration of the thermal interactions of the gearbox attachment.
The effective operating point must be below this line to avoid thermal overload of the geared motor.

❷ $M_{max,M}$ – Characteristic of the largest torque that can be generated by the motor component for a short time minus the gear friction.

$M_{S1,M}$ and $M_{max,M}$ may exceed the mechanically permissible limits of the gearbox, depending on the selection of the motor-gearbox combination [1].

Important gearbox component data in this catalog:

❸ $M_{2N,G}$ – The rated torque of the gearbox component at the output. This represents the fatigue strength limit of the gear teeth (independently of the motor). If exceeded, the gearbox is partially damaged and a service life calculation is required.

❹ $M_{2max,G}$ – Maximum torque of the gearbox component. This is the limit of the time strength range (can be tolerated for 30000 revolutions of the output shaft).
There is a risk of breakage if the limit is exceeded.

❺ $n_{1av,G}$ – Greatest average input speed. In each time window of 15 minutes, the average input speed must be below $n_{1av,G}$.

Important motor component data in this catalog:

❻ $M_{0,M}$ – The motor component can deliver this torque thermally on a sustained basis at standstill and near standstill. It may exceed the mechanical limits of the gearbox component if necessary [1].

❼ $M_{max,M}$ – The motor component can deliver this torque for a short time. It may exceed the mechanical limits of the gearbox component if necessary [1].

Important geared motor system data in this catalog:

❽ Rated operating point:
M_{2N} – Rated torque and
n_{2N} – rated speed.
This rated point can be permanently driven thermally and mechanically. If the S1 characteristic $M_{S1,M}$ at n_{2N} is greater than $M_{2N,G}$, M_{2N} is reduced accordingly. At the rated point, the geared motor has approximately its maximum power.

❾ $M_{2.0}$ – The geared motor can deliver this torque thermally on a sustained basis at standstill and near standstill.
It is reduced to $M_{2N,G}$ if necessary.

❿ M_{2max} – The geared motor can deliver this torque for a short time. It may be within the time strength range of the gearbox.

Servomotor 1FK2104-5AF… with gearbox NRK 090, i = 25

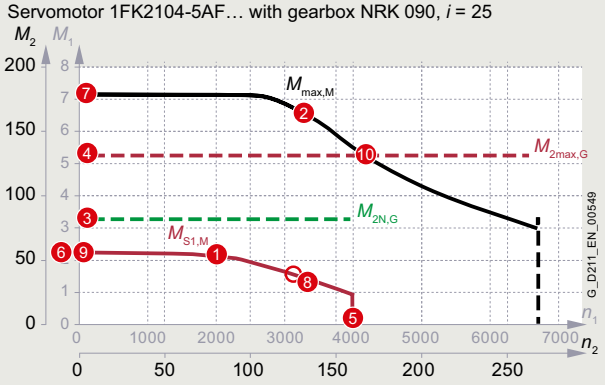

Servomotor 1FK2104-5AF… with gearbox NRK 070, i = 40

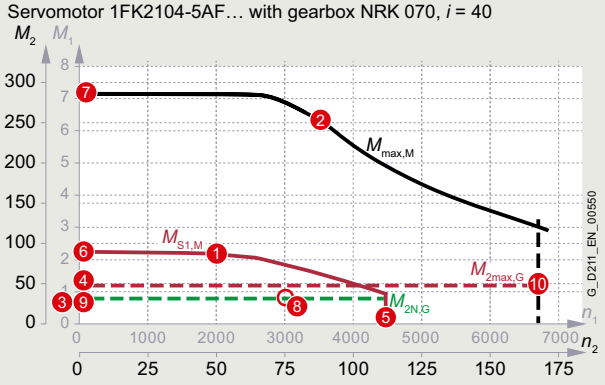

[1] In this case, it must be ensured that the torque effective at the gearbox output does not exceed the permissible limits (consideration of the load-to-motor inertia ratio during acceleration processes).
More information is provided in the Configuration Manual.

© Siemens 2022

Selection and ordering data

Glossary

Formula symbols	Unit	Designation	Explanation
i		Transmission ratio	Input-to-output speed transmission ratio
C_{T2}	Nm/ ‘	Torsional stiffness of the gearbox	Torsional stiffness of the gearbox related to the output
J_1	kg cm^2	Mass moment of inertia of the geared motor	Total mass moment of inertia of the geared motor related to the input or the motor shaft
$J_{1,G}$	kg cm^2	Mass moment of inertia of the gearbox component	Mass moment of inertia of the gearbox component of a geared motor related to the input of the gearbox
J_M	kg cm^2	Mass moment of inertia of the motor component without brake	Mass moment of inertia of the motor component of a geared motor
$J_{M,Br}$	kg cm^2	Mass moment of inertia of the motor component with brake	Mass moment of inertia of the motor component of a geared motor including motor holding brake
m	kg	Mass of the geared motor	Total mass of the geared motor
m_G	kg	Mass of the gearbox component	Mass of the gearbox component of a geared motor
m_M	kg	Mass of the motor component	Mass of the motor component of a geared motor
$m_{M,Br}$	kg	Mass of the motor component with brake	Mass of the motor component with motor holding brake
$M_{0,M}$	Nm	Static torque of the motor component on the geared motor	Torque of the motor component at standstill and near standstill that can be generated permanently electrically or on average. If this is above $M_{2max,G}$, it must be ensured that a maximum of $M_{2max,G}/ i$ is applied to the gearbox input (observe the gearbox inertia to load inertia ratio). If necessary, limit the acceleration, torque or current accordingly on the application side.
$M_{2.0}$	Nm	Geared motor static torque	The geared motor can deliver this torque thermally on a sustained basis at standstill and near standstill. It is within the fatigue strength range of the gearbox.
M_{2N}	Nm	Rated torque of the geared motor	The geared motor can deliver this torque thermally on a sustained basis at its rated speed. It is within the fatigue strength range of the gearbox.
$M_{2N,G}$	Nm	Rated torque of the gearbox component	Rated torque of the gearbox component at the output. This represents the fatigue strength limit of the gear teeth (independently of the motor). If exceeded, the gearbox is partially damaged and a service life calculation is required.
M_{max}	Nm	Maximum torque of the motor	Maximum torque of the motor that can be generated for a short time.
M_{2max}	Nm	Maximum torque of the geared motor	Maximum possible short-term and permissible torque at the output of the geared motor.
$M_{max,M}$	Nm	Maximum torque of the motor component	Electrically generated maximum torque of the motor component. If this is above $M_{2max,G}$, it must be ensured that a maximum of $M_{2max,G}/ i$ is applied to the gearbox input (observe the gearbox inertia to load inertia ratio). If necessary, limit the acceleration, torque or current accordingly on the application side.
$M_{2max,G}$	Nm	Maximum torque of the gearbox component	Maximum (very rare) permissible torque at the output of the gearbox. This is the limit of the time strength range. There is a risk of breakage if the limit is exceeded.
$M_{2Em.Off}$	Nm	Emergency Off torque	$M_{2Em.Off}$ can be tolerated a maximum of 1000 times during the gearbox service life without causing unacceptable damage to the gearbox. This code can be used to check whether high torques, caused by very rare operating faults, can damage the gearbox.
$n_{1av,G}$	rpm	Largest average input speed of the gearbox component	In each time window of 15 minutes, the average input speed must be below $n_{1av,G}$.
$n_{1max,G}$	rpm	Maximum input peed of the gearbox component	Maximum permissible short-term input speed of the gearbox component on a geared motor
$n_{max,M}$	rpm	Maximum speed of the motor component	Maximum achievable and maximum permissible speed of the motor component on a geared motor
$n_{2B,G}$	rpm	Reference speed of the gearbox	Reference speed relative to the rated torque $M_{2N,G}$ of the gearbox component. This is required to perform a service life calculation of the gearbox output bearings.
n_{2max}	rpm	Maximum speed of the geared motor	Maximum achievable and maximum permissible speed at the gearbox output of a geared motor
n_{2N}	rpm	Rated speed of the geared motor	The rated torque of the geared motor is specified at this speed
F_R	N	Radial force	Radial force perpendicular to the shaft axis
$F_{R\,eq}$	N	Average radial force	Radial force averaged over the cycle, perpendicular to the shaft axis. For ball bearings, use the cubic mean. For roller bearings, use the exponent 3.33 instead of the exponent 3.
$F_{R\,max}$	N	Maximum radial force	Maximum statically permissible radial force
F_A	N	Axial force	Axial force
$F_{A\,eq}$	N	Average axial force	Axial force averaged over the cycle. For ball bearings, use the cubic mean. For roller bearings, use the exponent 3.33 instead of the exponent 3.
$F_{A\,max}$	N	Maximum axial force	Maximum statically permissible axial force
M_b	Nm	Maximum permissible bending moment	Maximum permissible bending moment at the motor flange to gearbox adapter separation point
φ_2	’	Torsional backlash of the gearbox	Torsional backlash of the gearbox related to the output

© Siemens 2022

Selection and ordering data

Selection of servomotors with planetary gearbox

- Select gearbox type and gearbox size, e.g. on the basis of the required torque or the required shaft loads - Table *Permissible output shaft loads*.
- Select a suitable servomotor-gearbox combination from the *Selection data servomotors with planetary gearbox*, the *Servomotor data* and the *Planetary gearbox data*, e.g. on the basis of the rated speed of the servomotor with planetary gearbox, the associated transmission ratio and the rated torque.
  The fatigue strength of the motor and gearbox combination must be taken into account – see color background of the *Selection data servomotors with planetary gearbox* with associated color legend.

Structure of the tables for selection and ordering data

All combinations of servomotors with planetary gearbox including the transmission ratios available in each case can be found in the selection tables for SIMOTICS S-1FK2 and S-1FT2 servo planetary geared motors.

The selection tables are sorted according to the following criteria:

- Line supply voltage of the converter
- Gearbox type and size

The following views contain legends with explanations of the formula symbols and units specified in the selection and order tables.

Legend for "Servomotor data":

Servomotor data			Selection data servomotors with planetary gearbox	Servomotors with planetary gearbox
$M_{0,M}$	$M_{max,M}$	J_M ($J_{M,Br}$)		
Nm	Nm	kg cm²		
				1F.2102-0AG..-0...-Z
			Rotor moment of inertia of the motor component (with holding brake) [1]	■■■ + ■■■ + . . .
			Maximum possible short-term torque of the motor component [2]	
			Maximum thermally permissible effective torque of the motor component at standstill or near standstill [2]	

Legend for "Selection data servomotors with planetary gearbox":

Servomotor data			**Selection data servomotors with planetary gearbox**			Servomotors with planetary gearbox
$M_{0,M}$	$M_{max,M}$	J_M ($J_{M,Br}$)				
Nm	Nm	kg cm²				
...	...	...	n_{2N}	rpm	Rated speed of the servo planetary geared motor	1F.2102-0AG..-0...-Z
			M_{2N}	Nm	Rated torque of the servo planetary geared motor	■■■ + ■■■ + . . .
			$M_{2,0}$	Nm	Static torque of the servo planetary geared motor	
			M_{2max}	Nm	Max. permissible short-term output torque of the servo planetary geared motor	

Legend for "Planetary gearbox data":

Servomotor data			Selection data servomotors with planetary gearbox			Servomotors with planetary gearbox
$M_{0,M}$	$M_{max,M}$	J_M ($J_{M,Br}$)				
Nm	Nm	kg cm²				
Planetary gearbox data						1F.2102-0AG..-0...-Z
Gearbox type, gearbox stages:					Gearbox type and number of gearbox stages	■■■ + ■■■ + . . .
1. Order code					1. Order code for gearbox type, gearbox size and number of gearbox stages	
	i				Transmission ratio	
2. Order code					2. Order code for transmission ratio	
	$M_{2N,G}$	Nm			Rated torque of the gearbox component (fatigue strength)	
	$M_{2max,G}$	Nm			Maximum permissible short-term output torque of the gearbox (fatigue strength, max. 30000 revolutions of the output shaft)	
	$M_{2Em.Off}$	Nm			Emergency Off output torque of the gearbox (max. 1000 times)	
	$J_{1,G}$	kg cm²			Moment of inertia of the gearbox related to the input [1]	
	$\varphi_{2,G}$	'			Torsional backlash of the gearbox related to the output	

Color legend for the fatigue strength of the motor and gearbox combination:

Color legend:		
	$M_{max,M} \times i < M_{2N,G}$	**The motor and gearbox combination is fatigue-proof**
	$M_{2N,G} < M_{max,M} \times i < M_{2max,G}$	**Check acceleration and inertias, perform service life calculation if necessary**
	$M_{max,M} \times i > M_{2max,G}$	**The motor can destroy the gearbox, check acceleration and inertias, perform service life calculation if necessary**

[1] The total mass inertia is the sum of the motor and gearbox mass inertia. On some motors, the inertia of the gearbox clamping system is attributed to the motor.

[2] Exact values can be found in the data sheet of the motor-gearbox combination, available via the DT Configurator.

© Siemens 2022

Selection and ordering data

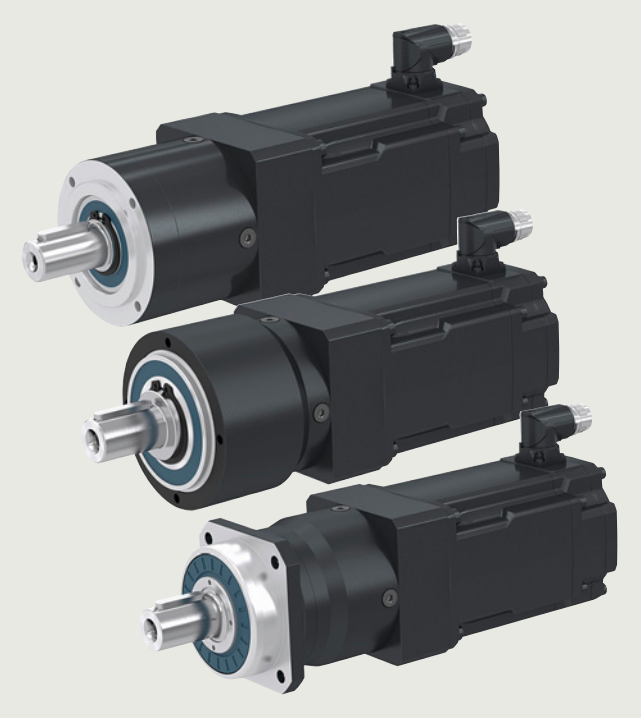

SIMOTICS S-1FK2 and S-1FT2 servo planetary geared motors

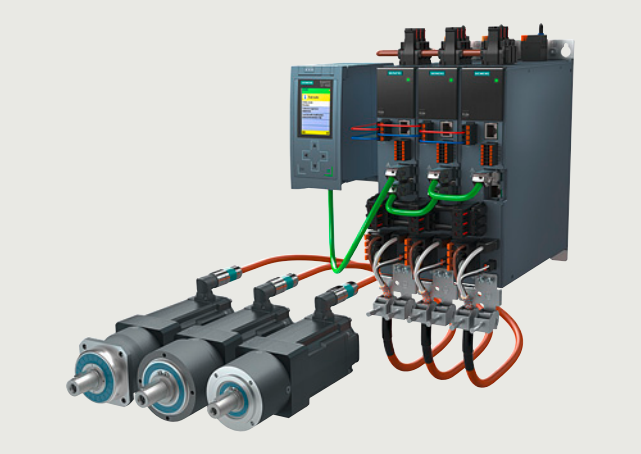

SINAMICS S210 servo converter with SIMOTICS S-1FK2 and S-1FT2 servo planetary geared motors

The following servo planetary geared motors are suitable for servo converters with line connection 200 V to 240 V 1 AC as well as 200 V to 240 V 3 AC, especially for SINAMICS S210 servo converters.

The rated points of the geared motors are adapted to this voltage.

© Siemens 2022

Gearbox type NRB040

Selection and ordering data

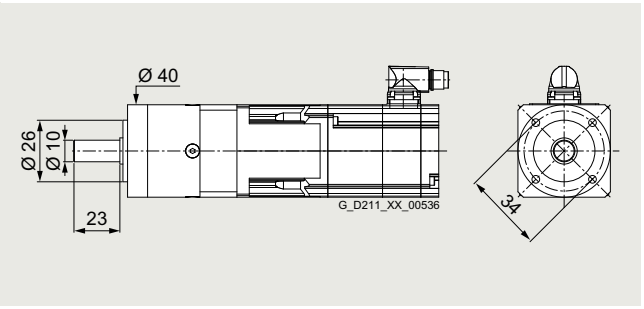

Permissible output shaft loads		
Average radial force for 20000 h	$F_{R,eq}$	200 N
Average axial force for 20000 h	$F_{A,eq}$	200 N
Average radial force for 30000 h	$F_{R,eq}$	160 N
Average axial force for 30000 h	$F_{A,eq}$	160 N
Maximum radial force	$F_{R,max}$	200 N
Maximum axial force	$F_{A,max}$	240 N

Servomotor data $M_{0,M}$ Nm	M_{maxM} Nm	J_M ($J_{M,Br}$) kg cm²	Selection data servomotors with planetary gearbox																	Servomotors with planetary gearbox
SIMOTICS S-1FK2 and S-1FT2 High Dynamic servomotors with planetary gearbox NRB040 1 and 2-stage																				
0.117 ... 0.124	0.517 ... 0.53	0.0245 (0.0285)	n_{2N}	rpm	1000	750	600	500	375	300	375	250	200	200	150	125	100	75	50	**1F.2102-0AG..-0..0-Z**
			M_{2N}	Nm	0.25	0.35	0.465	0.64	0.78	0.99	0.78	1.11	1.4	1.46	1.92	2.35	3.05	3.9	6.2	■■■ + ■■■ + . . .
			M_{2_0}	Nm	0.35	0.48	0.6	0.85	0.98	1.23	1.07	1.43	1.8	1.92	2.4	3	3.85	4.8	7.5	
			M_{2max}	Nm	1.57	2.1	2.6	3.7	4.2	5.2	4.7	6.2	7.8	8.3	10.4	13.1	16.7	20.5	12	
0.248 ... 0.264	1.04 ... 1.07	0.036 (0.04)	n_{2N}	rpm	1000	750	600	500	375	300	375	250	200	200	150	125	100	75	–	**1F.2102-1AG..-0..0-Z**
			M_{2N}	Nm	0.62	0.84	1.07	1.47	1.77	2.2	1.82	2.5	3.15	3.3	4.25	5.2	6.8	8.6	–	■■■ + ■■■ + . . .
			M_{2_0}	Nm	0.77	1.04	1.31	1.84	2.1	2.6	2.25	3.05	3.8	4.05	5.1	6.4	8.1	10.2	–	
			M_{2max}	Nm	3.15	4.25	5.3	7.4	8.5	8	9.5	12.6	15.8	16.8	21	26	32	29	–	
0.468 ... 0.496	1.83 ... 1.87	0.1396 (0.1586)	n_{2N}	rpm	1000	750	600	500	375	300	375	250	200	200	150	125	100	75	–	**1F.2103-2AG..-2..0-Z**
			M_{2N}	Nm	1.03	1.4	1.78	2.3	2.9	3.65	2.9	4.15	5.2	5.4	7	8.6	11	14.2	–	■■■ + ■■■ + . . .
			M_{2_0}	Nm	1.47	1.97	2.45	3.45	3.95	4.95	4.3	5.7	7.2	7.7	9.6	12	15.4	18	–	
			M_{2max}	Nm	5.6	7.4	9.3	13	10	8	16.6	22	27.5	29.5	32	29	32	29	–	
1.01 ... 1.04	3.87 ... 3.93	0.1856 (0.2046)	n_{2N}	rpm	750	600	500	375	375	–	300	250	200	150	150	125	–	–	–	**1F.2103-4AG..-2..0-Z**
			M_{2N}	Nm	2.3	3	3.7	5	5.1	–	6.5	7.7	9.7	12.6	13	15.5	–	–	–	■■■ + ■■■ + . . .
			M_{2_0}	Nm	3.1	4.1	5.1	7.2	6	–	9	12	15.1	16.1	20	18	–	–	–	
			M_{2max}	Nm	11.7	15.7	19.6	13.5	10	–	26	32	29	32	32	29	–	–	–	
SIMOTICS S-1FK2 and S-1FT2 Compact servomotors with planetary gearbox NRB040 1 and 2-stage																				
0.532 ... 0.566	1.73 ... 1.77	0.2466 (0.2666)	n_{2N}	rpm	1000	750	600	500	375	300	375	250	200	200	150	125	100	75	–	**1F.2203-2AG..-2..0-Z**
			M_{2N}	Nm	0.99	1.35	1.73	2.05	2.8	3.55	2.65	4.05	5	5	6.8	8.2	10.4	13.8	–	■■■ + ■■■ + . . .
			M_{2_0}	Nm	1.68	2.25	2.8	3.95	4.5	5	4.9	6.5	8.2	8.7	10.9	13.7	17.5	18	–	
			M_{2max}	Nm	5.3	7	8.8	12.3	10	8	15.7	21	26	27.5	32	29	32	29	–	
1.17 ... 1.2	3.59 ... 3.64	0.3966 (0.4166)	n_{2N}	rpm	1000	750	600	375	375	–	300	250	200	200	150	125	–	–	–	**1F.2203-4AG..-2..0-Z**
			M_{2N}	Nm	2.3	3.15	4.05	6.5	6	–	7.9	9.8	12.2	11.9	16.4	18	–	–	–	■■■ + ■■■ + . . .
			M_{2_0}	Nm	3.55	4.75	5.9	8.3	6	–	10.5	14	17.5	18.6	20	18	–	–	–	
			M_{2max}	Nm	10.9	14.5	18.1	13.5	10	–	26	32	29	32	32	29	–	–	–	

Planetary gearbox data																
Gearbox type:			NRB040, 1-stage						NRB040, 2-stage							
1. Order code			A11						A12							
	i		3	4	5	7	8	10	9	12	15	16	20	25	32	40	64
2. Order code			R03	R04	R05	R07	R08	R10	R09	R12	R15	R16	R20	R25	R32	R40	R64
	$M_{2N,G}$	Nm	11	15	14	8.5	6	5	16.5	20	18	20	20	18	20	18	7.5
	$M_{2max,G}$	Nm	17.5	24	22	13.5	10	8	26	32	29	32	32	29	32	29	12
	$M_{2Em.Off}$	Nm	22.5	30	36	26	27	27	33	40	36	40	40	36	40	36	27
	$J_{1,G}$	kg cm²	0.027	0.021	0.019	0.015	0.015	0.014	0.026	0.025	0.025	0.02	0.018	0.018	0.015	0.015	0.015
	$\varphi_{2,G}$	'	15						19								

Color legend:		
	$M_{max,M} \times i < M_{2N,G}$	The motor and gearbox combination is fatigue-proof
	$M_{2N,G} < M_{max,M} \times i < M_{2max,G}$	Check acceleration and inertias, perform service life calculation if necessary
	$M_{max,M} \times i > M_{2max,G}$	The motor can destroy the gearbox, check acceleration and inertias, perform service life calculation if necessary

© Siemens 2022

Servomotor data			Selection data servomotors with planetary gearbox							Servomotors with planetary gearbox
$M_{0,M}$	M_{maxM}	J_M ($J_{M,Br}$)								
Nm	Nm	kg cm²								
SIMOTICS S-1FK2 and S-1FT2 High Dynamic servomotors with planetary gearbox NRB040 3-stage										
0.117 ... 0.124	0.517 ... 0.53	0.0245 (0.0285)	n_{2N}	rpm	50	37.5	30	25	20	15	**1F.2102-0AG..-0..0-Z** ■■■ + ■■■ + . . .
			M_{2N}	Nm	5.5	7.5	9.3	11	15	18	
			$M_{2,0}$	Nm	7	9.3	11.6	14	18.6	18	
			M_{2max}	Nm	31	32	32	29	32	29	
0.248 ... 0.264	1.04 ... 1.07	0.036 (0.04)	n_{2N}	rpm	50	37.5	30	–	–	–	**1F.2102-1AG..-0..0-Z** ■■■ + ■■■ + . . .
			M_{2N}	Nm	12.2	16.5	20	–	–	–	
			$M_{2,0}$	Nm	14.8	19.8	20	–	–	–	
			M_{2max}	Nm	32	32	32	–	–	–	
0.468 ... 0.496	1.83 ... 1.87	0.1396 (0.1586)	n_{2N}	rpm	50	–	–	–	–	–	**1F.2103-2AG..-2..0-Z** ■■■ + ■■■ + . . .
			M_{2N}	Nm	20	–	–	–	–	–	
			$M_{2,0}$	Nm	20	–	–	–	–	–	
			M_{2max}	Nm	32	–	–	–	–	–	
SIMOTICS S-1FK2 and S-1FT2 Compact servomotors with planetary gearbox NRB040 3-stage										
0.532 ... 0.566	1.73 ... 1.77	0.2466 (0.2666)	n_{2N}	rpm	50	–	–	–	–	–	**1F.2203-2AG..-2..0-Z** ■■■ + ■■■ + . . .
			M_{2N}	Nm	19.6	–	–	–	–	–	
			$M_{2,0}$	Nm	20	–	–	–	–	–	
			M_{2max}	Nm	32	–	–	–	–	–	

Planetary gearbox data								
Gearbox type:			**NRB040, 3-stage**					
1. Order code			**A13**					
i			**60**	**80**	**100**	**120**	**160**	**200**
2. Order code			**R60**	**R80**	**R01**	**R21**	**R61**	**R02**
$M_{2N,G}$		Nm	20	20	20	18	20	18
$M_{2max,G}$		Nm	32	32	32	29	32	29
$M_{2Em.Off}$		Nm	40	40	40	36	40	36
$J_{1,G}$		kg cm²	0.025	0.018	0.018	0.025	0.015	0.015
$\varphi_{2,G}$		'	22					

Color legend:		
	$M_{max,M} \times i < M_{2N,G}$	**The motor and gearbox combination is fatigue-proof**
	$M_{2N,G} < M_{max,M} \times i < M_{2max,G}$	**Check acceleration and inertias, perform service life calculation if necessary**
	$M_{max,M} \times i > M_{2max,G}$	**The motor can destroy the gearbox, check acceleration and inertias, perform service life calculation if necessary**

© Siemens 2022

Gearbox type NRB060

Selection and ordering data

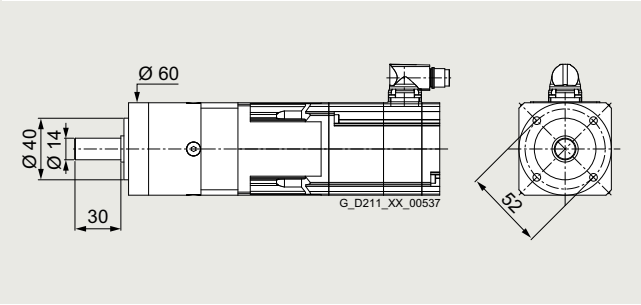

Permissible output shaft loads		
Average radial force for 20000 h	$F_{R,eq}$	400 N
Average axial force for 20000 h	$F_{A,eq}$	500 N
Average radial force for 30000 h	$F_{R,eq}$	340 N
Average axial force for 30000 h	$F_{A,eq}$	450 N
Maximum radial force	$F_{R,max}$	700 N
Maximum axial force	$F_{A,max}$	800 N

3 4

Servomotor data $M_{0,M}$ Nm	M_{maxM} Nm	J_M ($J_{M,Br}$) kg cm²	Selection data servomotors with planetary gearbox																Servomotors with planetary gearbox
SIMOTICS S-1FK2 and S-1FT2 High Dynamic servomotors with planetary gearbox NRB060 1 and 2-stage																			
0.106 ... 0.122	0.501 ... 0.512	0.0245 (0.0285)	n_{2N}	rpm	750	750	600	500	375	300	375	250	200	200	150	125	100	75	50	**1F.2102-0AG..-0..0-Z**
			M_{2N}	Nm	0.19	0.26	0.365	0.52	0.67	0.87	0.54	0.85	1.25	1.25	1.7	2.1	2.8	3.6	5.7	■■■ + ■■■ + . . .
			M_{2_0}	Nm	0.32	0.44	0.56	0.81	0.93	1.18	1.05	1.41	1.78	1.91	2.4	3	3.85	4.8	7.7	
			M_{2max}	Nm	1.5	2	2.5	3.55	4.05	5.1	4.55	6	7.6	8.1	10.1	12.7	16.2	20	29	
0.258 ... 0.271	1.02 ... 1.05	0.036 (0.04)	n_{2N}	rpm	1000	750	600	500	375	300	375	250	200	200	150	125	100	75	50	**1F.2102-1AG..-0..0-Z**
			M_{2N}	Nm	0.55	0.81	1.07	1.48	1.8	2.25	1.73	2.45	3.3	3.4	4.4	5.5	7.1	9	14.3	■■■ + ■■■ + . . .
			M_{2_0}	Nm	0.77	1.05	1.32	1.87	2.15	2.7	2.4	3.2	4	4.3	5.4	6.7	8.6	10.8	17.3	
			M_{2max}	Nm	3.1	4.15	5.2	7.3	8.3	10.4	9.3	12.4	15.5	16.6	20.5	25.5	33	41.5	29	
0.526 ... 0.554	1.82 ... 1.87	0.093 (0.112)	n_{2N}	rpm	1000	750	600	500	375	300	375	250	200	200	150	125	100	75	–	**1F.2103-2AG..-2..0-Z**
			M_{2N}	Nm	1.13	1.61	2.05	2.8	3.45	4.35	3.35	4.8	6.2	6.4	8.4	10.3	13.3	17	–	■■■ + ■■■ + . . .
			M_{2_0}	Nm	1.62	2.15	2.7	3.85	4.4	5.5	4.85	6.4	8.1	8.6	10.8	13.5	17.3	21.5	–	
			M_{2max}	Nm	5.5	7.4	9.3	13	14.9	18.6	16.6	22	27.5	29.5	36.5	46	59	64	–	
1.1 ... 1.16	3.83 ... 3.92	0.139 (0.158)	n_{2N}	rpm	1000	750	600	500	375	300	375	250	200	200	150	125	100	75	–	**1F.2103-4AG..-2..0-Z**
			M_{2N}	Nm	2.1	3.05	4	5.1	6.7	8.5	6.4	9.8	12.9	12.9	17.2	20.5	26.5	35	–	■■■ + ■■■ + . . .
			M_{2_0}	Nm	3.45	4.6	5.7	8.1	9.2	11.6	10.1	13.5	16.9	18	22.5	28	36	40	–	
			M_{2max}	Nm	11.7	15.6	19.5	27	29	24	34.5	46.5	58	62	70	64	70	64	–	
1.18 ... 1.2	3.55 ... 3.63	0.371 (0.451)	n_{2N}	rpm	500	375	300	250	200	150	200	125	100	100	75	60	50	37.5	–	**1F.2104-4AF..-2..0-Z**
			M_{2N}	Nm	3.35	4.5	5.7	7.9	9.1	11.5	9.7	13.3	16.8	17.7	22	28	35.5	40	–	■■■ + ■■■ + . . .
			M_{2_0}	Nm	3.55	4.75	5.9	8.3	9.5	11.9	10.6	14.2	17.8	19	23.5	29.5	37.5	40	–	
			M_{2max}	Nm	10.8	14.5	18.1	25	29	24	32	43	53	57	70	64	70	64	–	
1.17 ... 1.19	3.64 ... 3.73	0.371 (0.451)	n_{2N}	rpm	1000	750	600	500	375	300	375	250	200	200	150	125	100	75	–	**1F.2104-4AK..-2..0-Z**
			M_{2N}	Nm	3.1	4.25	5.4	7.3	8.8	11	8.9	12.5	16	16.6	21	26	33.5	40	–	■■■ + ■■■ + . . .
			M_{2_0}	Nm	3.55	4.7	5.9	8.3	9.5	11.9	10.6	14.1	17.7	18.8	23.5	29.5	37.5	40	–	
			M_{2max}	Nm	11.1	14.9	18.6	26	29	24	33	44	55	59	70	64	70	64	–	
2.27 ... 2.3	7.21 ... 7.32	0.581 (0.671)	n_{2N}	rpm	500	375	300	250	200	150	200	125	100	100	75	60	50	–	–	**1F.2104-5AF..-2..0-Z**
			M_{2N}	Nm	6.5	8.8	11	15.2	17.6	15	18.8	25.5	32	34	42.5	40	44	–	–	■■■ + ■■■ + . . .
			M_{2_0}	Nm	6.8	9.1	11.4	16	18	15	20.5	27	34	36	44	40	44	–	–	
			M_{2max}	Nm	21.5	29	36.5	40	29	24	65	70	70	70	70	64	70	–	–	

➥ Continued on the next page

Planetary gearbox data																
Gearbox type:			**NRB060, 1-stage**						**NRB060, 2-stage**							
1. Order code			**A21**						**A22**							
	i		**3**	**4**	**5**	**7**	**8**	**10**	**9**	**12**	**15**	**16**	**20**	**25**	**32**	**40**	**64**
2. Order code			**R03**	**R04**	**R05**	**R07**	**R08**	**R10**	**R09**	**R12**	**R15**	**R16**	**R20**	**R25**	**R32**	**R40**	**R64**
	$M_{2N,G}$	Nm	28	38	40	25	18	15	44	44	44	44	44	40	44	40	18
	$M_{2max,G}$	Nm	45	61	64	40	29	24	70	70	70	70	70	64	70	64	29
	$M_{2Em.Off}$	Nm	66	88	80	80	80	80	88	88	88	88	88	80	88	80	80
	$J_{1,G}$	kg cm²	0.128	0.092	0.08	0.069	0.067	0.065	0.121	0.118	0.076	0.085	0.075	0.075	0.066	0.066	0.066
	$\varphi_{2,G}$	'	10						12								

Color legend:		
	$M_{max,M} \times i < M_{2N,G}$	**The motor and gearbox combination is fatigue-proof**
	$M_{2N,G} < M_{max,M} \times i < M_{2max,G}$	**Check acceleration and inertias, perform service life calculation if necessary**
	$M_{max,M} \times i > M_{2max,G}$	**The motor can destroy the gearbox, check acceleration and inertias, perform service life calculation if necessary**

© Siemens 2022

Servomotor data $M_{0,M}$ Nm	M_{maxM} Nm	J_M ($J_{M,Br}$) kg cm²	Selection data servomotors with planetary gearbox																	Servomotors with planetary gearbox
SIMOTICS S-1FK2 and S-1FT2 High Dynamic servomotors with planetary gearbox NRB060 1 and 2-stage (continued)																				
2.26 ... 2.28	7.3 ... 7.41	0.581 (0.671)	n_{2N}	rpm	1000	750	600	500	375	300	300	250	200	200	150	125	100	–	–	1F.2104-5AK..-2..0-Z
			M_{2N}	Nm	4.55	6.5	8.4	10.4	13.8	15	15.8	19.3	25	24.5	33.5	40	44	–	–	■■■ + ■■■ + . . .
			$M_{2,0}$	Nm	6.8	9.1	11.4	15.9	18	15	20	27	33.5	36	44	40	44	–	–	
			M_{2max}	Nm	22	29.5	37	40	29	24	66	70	70	70	70	64	70	–	–	
3.01 ... 3.05	9.63 ... 9.78	0.781 (0.861)	n_{2N}	rpm	500	375	300	250	200	–	200	125	100	100	75	60	–	–	–	1F.2104-6AF..-2..0-Z
			M_{2N}	Nm	8.2	11.1	14	18.8	18	–	23.5	33.5	42	43.5	44	40	–	–	–	■■■ + ■■■ + . . .
			$M_{2,0}$	Nm	9.1	12.1	15.2	21	18	–	27	36	44	44	44	40	–	–	–	
			M_{2max}	Nm	29	39	48.5	40	29	–	70	70	70	70	70	64	–	–	–	
4.7 ... 4.75	14.4 ... 14.6	1.98 (2.82)	n_{2N}	rpm	500	375	300	250	–	–	200	125	100	100	–	–	–	–	–	1F.2105-4AF..-0..0-Z
			M_{2N}	Nm	12.3	16.4	20.5	25	–	–	32.5	44	44	44	–	–	–	–	–	■■■ + ■■■ + . . .
			$M_{2,0}$	Nm	14.2	18.9	23.5	25	–	–	42	44	44	44	–	–	–	–	–	
			M_{2max}	Nm	43.5	58	64	40	–	–	70	70	70	70	–	–	–	–	–	
7.13 ... 7.25	23.2 ... 23.5	2.92 (3.77)	n_{2N}	rpm	500	375	300	–	–	–	200	–	–	–	–	–	–	–	–	1F.2105-6AF..-0..0-Z
			M_{2N}	Nm	16.5	22	27.5	–	–	–	38.5	–	–	–	–	–	–	–	–	■■■ + ■■■ + . . .
			$M_{2,0}$	Nm	21.5	28.5	36	–	–	–	44	–	–	–	–	–	–	–	–	
			M_{2max}	Nm	45	61	64	–	–	–	70	–	–	–	–	–	–	–	–	
SIMOTICS S-1FK2 and S-1FT2 Compact servomotors with planetary gearbox NRB060 1 and 2-stage																				
0.562 ... 0.573	1.73 ... 1.77	0.2 (0.22)	n_{2N}	rpm	1000	750	600	500	375	300	375	250	200	200	150	125	100	75	–	1F.2203-2AG..-2..0-Z
			M_{2N}	Nm	1.14	1.64	2.1	2.75	3.55	4.5	3.25	4.9	6.4	6.5	8.6	10.5	13.5	17.5	–	■■■ + ■■■ + . . .
			$M_{2,0}$	Nm	1.68	2.25	2.8	3.95	4.55	5.7	5.1	6.8	8.5	9	11.3	14.2	18.2	22.5	–	
			M_{2max}	Nm	5.2	7	8.8	12.3	14.1	17.6	15.7	20.5	26	27.5	34.5	43.5	55	64	–	
1.17 ... 1.19	3.55 ... 3.63	0.35 (0.37)	n_{2N}	rpm	1000	750	600	500	375	300	375	250	200	200	150	125	100	75	–	1F.2203-4AG..-2..0-Z
			M_{2N}	Nm	2.8	3.95	5	6.6	8.2	10.3	8.1	11.5	14.7	15.2	19.7	24	30.5	39.5	–	■■■ + ■■■ + . . .
			$M_{2,0}$	Nm	3.55	4.75	5.9	8.3	9.5	11.9	10.6	14.1	17.7	18.9	23.5	29.5	37.5	40	–	
			M_{2max}	Nm	10.8	14.5	18.1	25	29	24	32	43	53	57	70	64	70	64	–	
2.23 ... 2.26	6.81 ... 6.91	1.251 (1.331)	n_{2N}	rpm	500	375	300	250	200	150	200	125	100	100	75	60	50	–	–	1F.2204-5AF..-2..0-Z
			M_{2N}	Nm	6.2	8.4	10.5	14.4	16.7	15	17.8	24.5	30.5	32	41	40	44	–	–	■■■ + ■■■ + . . .
			$M_{2,0}$	Nm	6.7	9	11.2	15.7	18	15	20	26.5	33.5	35.5	44	40	44	–	–	
			M_{2max}	Nm	20.5	27.5	34.5	40	29	24	61	70	70	70	70	64	70	–	–	
2.25 ... 2.27	6.81 ... 6.91	1.251 (1.331)	n_{2N}	rpm	750	600	600	375	375	300	300	200	200	150	150	125	100	–	–	1F.2204-5AK..-2..0-Z
			M_{2N}	Nm	5.5	7.3	7.5	12.4	12.6	15	14.8	22	23	29.5	30.5	36.5	44	–	–	■■■ + ■■■ + . . .
			$M_{2,0}$	Nm	6.8	9	11.3	15.8	18	15	20	27	33.5	35.5	44	40	44	–	–	
			M_{2max}	Nm	20.5	27.5	34.5	40	29	24	61	70	70	70	70	64	70	–	–	
3 ... 3.03	9.14 ... 9.27	1.631 (1.711)	n_{2N}	rpm	500	375	300	250	200	–	200	125	100	100	75	60	–	–	–	1F.2204-6AF..-2..0-Z
			M_{2N}	Nm	8.7	11.8	14.8	19.7	18	–	24.5	34.5	43.5	44	44	40	–	–	–	■■■ + ■■■ + . . .
			$M_{2,0}$	Nm	9	12.1	15.1	21	18	–	27	36	44	44	44	40	–	–	–	
			M_{2max}	Nm	27.5	37	46	40	29	–	70	70	70	70	70	64	–	–	–	
2.85 ... 2.9	10.4 ... 10.5	3.42 (4.32)	n_{2N}	rpm	500	375	300	250	200	–	200	125	100	100	75	–	–	–	–	1F.2205-2AF..-0..0-Z
			M_{2N}	Nm	7.7	10.3	12.9	17.6	18	–	21.5	30	37.5	39.5	44	–	–	–	–	■■■ + ■■■ + . . .
			$M_{2,0}$	Nm	8.7	11.6	14.5	20	18	–	25.5	34	42.5	44	44	–	–	–	–	
			M_{2max}	Nm	31.5	41.5	52	40	29	–	70	70	70	70	70	–	–	–	–	

➥ Continued on the next page

Planetary gearbox data																
Gearbox type:			NRB060, 1-stage						NRB060, 2-stage							
1. Order code			A21						A22							
	i		3	4	5	7	8	10	9	12	15	16	20	25	32	40	64
2. Order code			R03	R04	R05	R07	R08	R10	R09	R12	R15	R16	R20	R25	R32	R40	R64
	$M_{2N,G}$	Nm	28	38	40	25	18	15	44	44	44	44	44	40	44	40	18
	$M_{2max,G}$	Nm	45	61	64	40	29	24	70	70	70	70	70	64	70	64	29
	$M_{2Em.Off}$	Nm	66	88	80	80	80	80	88	88	88	88	88	80	88	80	80
	$J_{1,G}$	kg cm²	0.128	0.092	0.08	0.069	0.067	0.065	0.121	0.118	0.076	0.085	0.075	0.075	0.066	0.066	0.066
	$\varphi_{2,G}$	'	10						12								

Color legend:		
	$M_{max,M} \times i < M_{2N,G}$	The motor and gearbox combination is fatigue-proof
	$M_{2N,G} < M_{max,M} \times i < M_{2max,G}$	Check acceleration and inertias, perform service life calculation if necessary
	$M_{max,M} \times i > M_{2max,G}$	The motor can destroy the gearbox, check acceleration and inertias, perform service life calculation if necessary

© Siemens 2022

Gearbox type NRB060

Servomotor data

$M_{0,M}$	M_{maxM}	J_M ($J_{M,Br}$)
Nm	Nm	kg cm²
4.86 ... 4.95	17.3 ... 17.6	5.37 (6.27)

Selection data servomotors with planetary gearbox

Servomotors with planetary gearbox

SIMOTICS S-1FK2 and S-1FT2 Compact servomotors with planetary gearbox NRB060 1 and 2-stage (continued)

1F.2205-4AF..-0..0-Z ■■■ + ■■■ + . . .

n_{2N}	rpm	500	375	300	250	–	–	200	125	–	–	–	–	–	–	–
M_{2N}	Nm	11.2	15.1	19	23.5	–	–	28	43.5	–	–	–	–	–	–	–
$M_{2,0}$	Nm	14.8	19.8	24.5	25	–	–	43.5	44	–	–	–	–	–	–	–
M_{2max}	Nm	45	61	64	40	–	–	70	70	–	–	–	–	–	–	–

Planetary gearbox data

Gearbox type:		**NRB060, 1-stage**						**NRB060, 2-stage**								
1. Order code		**A21**						**A22**								
i		**3**	**4**	**5**	**7**	**8**	**10**	**9**	**12**	**15**	**16**	**20**	**25**	**32**	**40**	**64**
2. Order code		**R03**	**R04**	**R05**	**R07**	**R08**	**R10**	**R09**	**R12**	**R15**	**R16**	**R20**	**R25**	**R32**	**R40**	**R64**
$M_{2N,G}$	Nm	28	38	40	25	18	15	44	44	44	44	44	40	44	40	18
$M_{2max,G}$	Nm	45	61	64	40	29	24	70	70	70	70	70	64	70	64	29
$M_{2Em.Off}$	Nm	66	88	80	80	80	80	88	88	88	88	88	80	88	80	80
$J_{1,G}$	kg cm²	0.128	0.092	0.08	0.069	0.067	0.065	0.121	0.118	0.076	0.085	0.075	0.075	0.066	0.066	0.066
$\varphi_{2,G}$	'	10						12								

Color legend:		
	$M_{max,M} \times i < M_{2N,G}$	**The motor and gearbox combination is fatigue-proof**
	$M_{2N,G} < M_{max,M} \times i < M_{2max,G}$	**Check acceleration and inertias, perform service life calculation if necessary**
	$M_{max,M} \times i > M_{2max,G}$	**The motor can destroy the gearbox, check acceleration and inertias, perform service life calculation if necessary**

© Siemens 2022

Servomotor data $M_{0,M}$ Nm	M_{maxM} Nm	J_M ($J_{M,Br}$) kg cm²	Selection data servomotors with planetary gearbox										Servomotors with planetary gearbox
SIMOTICS S-1FK2 and S-1FT2 High Dynamic servomotors with planetary gearbox NRB060 3-stage													
0.106 ... 0.122	0.501 ... 0.512	0.0245 (0.0285)	n_{2N}	rpm	50	37.5	30	25	20	15	12.5	10	1F.2102-0AG..-0..0-Z ■■■ + ■■■ + . . .
			M_{2N}	Nm	5.1	6.8	8.6	10.7	13.9	17.8	22	27.5	
			$M_{2,0}$	Nm	7.1	9.5	11.9	14.3	19.1	23.5	30.5	38	
			M_{2max}	Nm	30	40	50	60	70	64	70	64	
0.258 ... 0.271	1.02 ... 1.05	0.036 (0.04)	n_{2N}	rpm	50	37.5	30	25	20	15	12.5	–	1F.2102-1AG..-0..0-Z ■■■ + ■■■ + . . .
			M_{2N}	Nm	13	17.3	21.5	26	34.5	40	44	–	
			$M_{2,0}$	Nm	16.1	21	26.5	32	42.5	40	44	–	
			M_{2max}	Nm	61	70	70	70	70	64	70	–	
0.526 ... 0.554	1.82 ... 1.87	0.093 (0.112)	n_{2N}	rpm	50	37.5	30	25	–	–	–	–	1F.2103-2AG..-2..0-Z ■■■ + ■■■ + . . .
			M_{2N}	Nm	24.5	32.5	40.5	44	–	–	–	–	
			$M_{2,0}$	Nm	31.5	42	44	44	–	–	–	–	
			M_{2max}	Nm	70	70	70	70	–	–	–	–	
1.1 ... 1.16	3.83 ... 3.92	0.139 (0.158)	n_{2N}	rpm	50	–	–	–	–	–	–	–	1F.2103-4AG..-2..0-Z ■■■ + ■■■ + . . .
			M_{2N}	Nm	44	–	–	–	–	–	–	–	
			$M_{2,0}$	Nm	44	–	–	–	–	–	–	–	
			M_{2max}	Nm	70	–	–	–	–	–	–	–	
1.18 ... 1.2	3.55 ... 3.63	0.371 (0.451)	n_{2N}	rpm	25	–	–	–	–	–	–	–	1F.2104-4AF..-2..0-Z ■■■ + ■■■ + . . .
			M_{2N}	Nm	44	–	–	–	–	–	–	–	
			$M_{2,0}$	Nm	44	–	–	–	–	–	–	–	
			M_{2max}	Nm	70	–	–	–	–	–	–	–	
1.17 ... 1.19	3.64 ... 3.73	0.371 (0.451)	n_{2N}	rpm	50	–	–	–	–	–	–	–	1F.2104-4AK..-2..0-Z ■■■ + ■■■ + . . .
			M_{2N}	Nm	44	–	–	–	–	–	–	–	
			$M_{2,0}$	Nm	44	–	–	–	–	–	–	–	
			M_{2max}	Nm	70	–	–	–	–	–	–	–	
SIMOTICS S-1FK2 and S-1FT2 Compact servomotors with planetary gearbox NRB060 3-stage													
0.562 ... 0.573	1.73 ... 1.77	0.2 (0.22)	n_{2N}	rpm	50	37.5	30	25	–	–	–	–	1F.2203-2AG..-2..0-Z ■■■ + ■■■ + . . .
			M_{2N}	Nm	25	33	41.5	44	–	–	–	–	
			$M_{2,0}$	Nm	33.5	44	44	44	–	–	–	–	
			M_{2max}	Nm	70	70	70	70	–	–	–	–	
1.17 ... 1.19	3.55 ... 3.63	0.35 (0.37)	n_{2N}	rpm	50	–	–	–	–	–	–	–	1F.2203-4AG..-2..0-Z ■■■ + ■■■ + . . .
			M_{2N}	Nm	44	–	–	–	–	–	–	–	
			$M_{2,0}$	Nm	44	–	–	–	–	–	–	–	
			M_{2max}	Nm	70	–	–	–	–	–	–	–	

Planetary gearbox data									
Gearbox type:			**NRB060, 3-stage**						
1. Order code			**A23**						
i			**60**	**80**	**100**	**120**	**160**	**200**	**256**	**320**
2. Order code			**R60**	**R80**	**R01**	**R21**	**R61**	**R02**	**R52**	**R23**
$M_{2N,G}$		Nm	44	44	44	44	44	40	44	40
$M_{2max,G}$		Nm	70	70	70	70	70	64	70	64
$M_{2Em.Off}$		Nm	88	88	88	88	88	80	88	80
$J_{1,G}$		kg cm²	0.076	0.075	0.074	0.066	0.066	0.066	0.066	0.066
$\varphi_{2,G}$		'	15							

Color legend:		
	$M_{max,M} \times i < M_{2N,G}$	The motor and gearbox combination is fatigue-proof
	$M_{2N,G} < M_{max,M} \times i < M_{2max,G}$	Check acceleration and inertias, perform service life calculation if necessary
	$M_{max,M} \times i > M_{2max,G}$	The motor can destroy the gearbox, check acceleration and inertias, perform service life calculation if necessary

© Siemens 2022

Gearbox type NRB080

Selection and ordering data

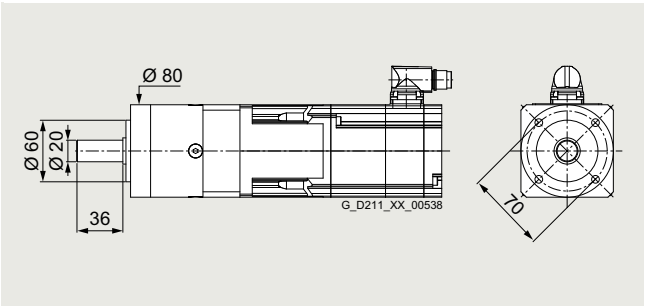

Permissible output shaft loads		
Average radial force for 20000 h	$F_{R,eq}$	750 N
Average axial force for 20000 h	$F_{A,eq}$	1000 N
Average radial force for 30000 h	$F_{R,eq}$	650 N
Average axial force for 30000 h	$F_{A,eq}$	900 N
Maximum radial force	$F_{R,max}$	1250 N
Maximum axial force	$F_{A,max}$	1600 N

3 4

Servomotor data $M_{0,M}$ Nm	M_{maxM} Nm	J_M ($J_{M,Br}$) kg cm²	Selection data servomotors with planetary gearbox																Servomotors with planetary gearbox
SIMOTICS S-1FK2 and S-1FT2 High Dynamic servomotors with planetary gearbox NRB080 1 and 2-stage																			
0.517 ... 0.544	1.79 ... 1.83	0.093 (0.112)	n_{2N}	rpm	1000	750	600	500	375	300	375	250	200	200	150	125	100	75	50	**1F.2103-2AG..-0..0-Z**
			M_{2N}	Nm	0.85	1.25	1.73	2.4	3.1	3.95	2.8	4.2	5.3	5.4	7.5	9.2	12.3	15.9	24.5	■■■ + ■■■ + . . .
			M_{2_0}	Nm	1.55	2.1	2.65	3.75	4.3	5.4	4.8	6.4	8.1	8.6	10.8	13.5	17.3	21.5	34.5	
			M_{2max}	Nm	5.4	7.2	9.1	12.7	14.6	18.3	16.3	21.5	27	29	36	45	58	72	80	
1.13 ... 1.15	3.78 ... 3.88	0.139 (0.158)	n_{2N}	rpm	750	600	500	375	375	300	300	250	200	200	150	125	100	75	50	**1F.2103-4AG..-0..0-Z**
			M_{2N}	Nm	2.6	3.45	4.45	6.5	6.8	8.7	7.9	9.8	12.4	12.1	17.3	21	27.5	35.5	50	■■■ + ■■■ + . . .
			M_{2_0}	Nm	3.35	4.5	5.6	8	9.1	11.4	10.2	13.6	17.1	18.2	22.5	28.5	36.5	45.5	50	
			M_{2max}	Nm	11.6	15.4	19.3	27	31	38.5	34.5	46	57	61	76	95	122	153	80	
1.14 ... 1.16	3.5 ... 3.59	0.35 (0.43)	n_{2N}	rpm	500	375	300	250	200	150	200	125	100	100	75	60	50	37.5	25	**1F.2104-4AF..-2..0-Z**
			M_{2N}	Nm	3.25	4.4	5.6	7.8	9.1	11.4	9.7	13.3	16.7	17.6	22	28	35.5	45	50	■■■ + ■■■ + . . .
			M_{2_0}	Nm	3.4	4.55	5.7	8.1	9.2	11.6	10.3	13.8	17.3	18.4	23	28.5	36.5	46	50	
			M_{2max}	Nm	10.7	14.3	17.9	25	28.5	35.5	32	42.5	53	56	71	88	113	141	80	
1.13 ... 1.16	3.6 ... 3.69	0.35 (0.43)	n_{2N}	rpm	1000	750	600	500	375	300	375	250	200	200	150	125	100	75	50	**1F.2104-4AK..-2..0-Z**
			M_{2N}	Nm	2.65	3.9	5.1	7	8.6	10.8	8.6	12.1	15.2	15.8	20.5	25.5	33	42.5	50	■■■ + ■■■ + . . .
			M_{2_0}	Nm	3.4	4.55	5.7	8	9.2	11.5	10.3	13.7	17.2	18.3	22.5	28.5	36.5	45.5	50	
			M_{2max}	Nm	11	14.7	18.4	25.5	29.5	36.5	32.5	43.5	54	58	72	91	116	145	80	
2.21 ... 2.26	7.08 ... 7.27	0.56 (0.65)	n_{2N}	rpm	500	375	300	250	200	150	200	125	100	100	75	60	50	37.5	–	**1F.2104-5AF..-2..0-Z**
			M_{2N}	Nm	6.6	8.8	11.1	15.5	17.8	22	19.1	26	32.5	34.5	43.5	54	69	88	–	■■■ + ■■■ + . . .
			M_{2_0}	Nm	6.7	9	11.2	15.8	18	22.5	20	26.5	33.5	35.5	44.5	55	71	89	–	
			M_{2max}	Nm	21.5	29	36	50	58	61	64	86	107	114	143	176	192	176	–	
2.2 ... 2.25	7.17 ... 7.36	0.56 (0.65)	n_{2N}	rpm	750	600	600	375	375	300	300	250	200	150	150	125	100	75	–	**1F.2104-5AK..-2..0-Z**
			M_{2N}	Nm	5.8	7.6	8	13.8	14.3	18.3	16.8	20	25	32.5	35	41.5	55	73	–	■■■ + ■■■ + . . .
			M_{2_0}	Nm	6.6	8.9	11.1	15.7	17.9	22	20	26.5	33	35.5	44	55	71	88	–	
			M_{2max}	Nm	22	29	36.5	51	58	61	65	87	109	116	145	176	192	176	–	
2.95 ... 3.01	9.49 ... 9.73	0.76 (0.84)	n_{2N}	rpm	500	375	300	250	200	150	200	125	100	100	75	60	50	37.5	–	**1F.2104-6AF..-2..0-Z**
			M_{2N}	Nm	8.8	11.8	14.8	20.5	23.5	29.5	26	35	44	46.5	58	73	94	110	–	■■■ + ■■■ + . . .
			M_{2_0}	Nm	8.9	12	15	21	24	30	26.5	35.5	44.5	47.5	59	74	95	110	–	
			M_{2max}	Nm	29	38.5	48.5	68	77	61	86	115	144	153	192	176	192	176	–	

➥ Continued on the next page

Planetary gearbox data																
Gearbox type:			NRB080, 1-stage						NRB080, 2-stage							
1. Order code			A31						A32							
	i		3	4	5	7	8	10	9	12	15	16	20	25	32	40	64
2. Order code			R03	R04	R05	R07	R08	R10	R09	R12	R15	R16	R20	R25	R32	R40	R64
	$M_{2N,G}$	Nm	85	115	110	65	50	38	130	120	110	120	120	110	120	110	50
	$M_{2max,G}$	Nm	136	184	176	104	80	61	208	192	176	192	192	176	192	176	80
	$M_{2Em.Off}$	Nm	180	240	220	178	190	200	260	240	220	240	240	220	240	220	190
	$J_{1,G}$	kg cm²	0.654	0.455	0.423	0.379	0.37	0.359	0.613	0.589	0.586	0.446	0.406	0.404	0.366	0.365	0.366
	$\varphi_{2,G}$	'	7						9								

Color legend:		
	$M_{max,M} \times i < M_{2N,G}$	The motor and gearbox combination is fatigue-proof
	$M_{2N,G} < M_{max,M} \times i < M_{2max,G}$	Check acceleration and inertias, perform service life calculation if necessary
	$M_{max,M} \times i > M_{2max,G}$	The motor can destroy the gearbox, check acceleration and inertias, perform service life calculation if necessary

© Siemens 2022

Servomotor data $M_{0,M}$ Nm	M_{maxM} Nm	J_M ($J_{M,Br}$) kg cm²	Selection data servomotors with planetary gearbox																	Servomotors with planetary gearbox
SIMOTICS S-1FK2 and S-1FT2 High Dynamic servomotors with planetary gearbox NRB080 1 and 2-stage (continued)																				
4.68 ... 4.74	14.4 ... 14.6	1.71 (2.55)	n_{2N}	rpm	500	375	300	250	200	150	200	125	100	100	75	60	50	37.5	–	**1F.2105-4AF..-0..0-Z**
			M_{2N}	Nm	12.8	17.2	21.5	29.5	34	38	36	50	63	66	83	104	120	110	–	■■■ + ■■■ + . . .
			$M_{2,0}$	Nm	14.1	18.9	23.5	33	37.5	38	42	56	70	74	93	110	120	110	–	
			M_{2max}	Nm	43.5	58	73	102	80	61	130	173	176	192	192	176	192	176	–	
7.32 ... 7.5	23.1 ... 23.5	2.65 (3.5)	n_{2N}	rpm	500	375	300	250	200	–	200	125	100	100	75	60	–	–	–	**1F.2105-6AF..-0..0-Z**
			M_{2N}	Nm	19.2	25.5	32	42.5	50	–	51	74	93	96	120	110	–	–	–	■■■ + ■■■ + . . .
			$M_{2,0}$	Nm	22.5	29.5	37	52	50	–	66	88	110	117	120	110	–	–	–	
			M_{2max}	Nm	70	93	117	104	80	–	208	192	176	192	192	176	–	–	–	
7.41 ... 7.57	23.5 ... 23.8	5.472 (7.172)	n_{2N}	rpm	500	375	300	250	200	–	150	125	100	100	75	–	–	–	–	**1F.2106-3AF..-0..0-Z**
			M_{2N}	Nm	17.2	23	29	35.5	45	–	56	68	84	83	111	–	–	–	–	■■■ + ■■■ + . . .
			$M_{2,0}$	Nm	22.5	30	37.5	52	50	–	66	89	110	119	120	–	–	–	–	
			M_{2max}	Nm	71	95	118	104	80	–	208	192	176	192	192	–	–	–	–	
9.59 ... 9.81	31.2 ... 31.7	6.872 (8.472)	n_{2N}	rpm	500	375	300	200	200	–	150	125	100	100	75	–	–	–	–	**1F.2106-4AF..-0..0-Z**
			M_{2N}	Nm	20.5	27	34.5	52	50	–	66	78	96	93	120	–	–	–	–	■■■ + ■■■ + . . .
			$M_{2,0}$	Nm	29	39	49	65	50	–	86	115	110	120	120	–	–	–	–	
			M_{2max}	Nm	95	126	157	104	79	–	208	192	176	192	191	–	–	–	–	
SIMOTICS S-1FK2 and S-1FT2 Compact servomotors with planetary gearbox NRB080 1 and 2-stage																				
0.511 ... 0.537	1.69 ... 1.73	0.2 (0.22)	n_{2N}	rpm	750	600	600	500	375	300	300	250	200	200	150	125	100	75	50	**1F.2203-2AG..-0..0-Z**
			M_{2N}	Nm	1.16	1.57	1.75	2.3	3.2	4.1	3.45	4.25	5.4	5.4	7.7	9.3	12.5	16.4	25	■■■ + ■■■ + . . .
			$M_{2,0}$	Nm	1.53	2.05	2.6	3.7	4.25	5.3	4.75	6.3	8	8.5	10.6	13.3	17.1	21	34	
			M_{2max}	Nm	5.1	6.8	8.6	12	13.8	17.2	15.4	20.5	25.5	27	34	42.5	54	68	80	
1.13 ... 1.16	3.5 ... 3.59	0.35 (0.37)	n_{2N}	rpm	1000	750	600	500	375	300	375	250	200	200	150	125	100	75	50	**1F.2203-4AG..-0..0-Z**
			M_{2N}	Nm	2.35	3.5	4.75	6.3	8	10.2	7.7	11.2	14.1	14.5	19.3	23.5	30.5	39.5	50	■■■ + ■■■ + . . .
			$M_{2,0}$	Nm	3.4	4.55	5.7	8	9.2	11.5	10.3	13.7	17.2	18.3	22.5	28.5	36.5	45.5	50	
			M_{2max}	Nm	10.7	14.3	17.9	25	28.5	35.5	32	42.5	53	56	71	88	113	141	80	
2.17 ... 2.22	6.68 ... 6.86	1.23 (1.31)	n_{2N}	rpm	500	375	300	250	200	150	200	125	100	100	75	60	50	37.5	–	**1F.2204-5AF..-2..0-Z**
			M_{2N}	Nm	6.3	8.4	10.7	14.7	17.1	21.5	18.1	25	31	33	41.5	52	66	84	–	■■■ + ■■■ + . . .
			$M_{2,0}$	Nm	6.6	8.8	11	15.5	17.7	22	19.8	26	33	35	43.5	54	70	87	–	
			M_{2max}	Nm	20.5	27	34	47.5	54	61	61	81	101	108	135	169	192	176	–	
2.18 ... 2.23	6.68 ... 6.86	1.23 (1.31)	n_{2N}	rpm	750	600	500	375	375	300	300	200	200	150	150	100	100	75	–	**1F.2204-5AK..-2..0-Z**
			M_{2N}	Nm	5.6	7.3	9.3	13.2	13.2	16.9	15.9	23	23	30.5	32.5	47.5	50	68	–	■■■ + ■■■ + . . .
			$M_{2,0}$	Nm	6.6	8.8	11.1	15.6	17.8	22	19.9	26.5	33	35	44	55	70	88	–	
			M_{2max}	Nm	20.5	27	34	47.5	54	61	61	81	101	108	135	169	192	176	–	
2.93 ... 3	9 ... 9.22	1.61 (1.69)	n_{2N}	rpm	500	375	300	250	200	150	200	125	100	100	75	60	50	37.5	–	**1F.2204-6AF..-2..0-Z**
			M_{2N}	Nm	8.7	11.7	14.7	20.5	23.5	29.5	25.5	35	43.5	46.5	58	73	93	110	–	■■■ + ■■■ + . . .
			$M_{2,0}$	Nm	8.9	11.9	14.9	20.5	23.5	29.5	26.5	35.5	44.5	47	59	74	94	110	–	
			M_{2max}	Nm	27.5	36.5	46	64	73	61	82	109	136	145	181	176	192	176	–	
2.89 ... 3.02	10.2 ... 10.5	3.15 (4.05)	n_{2N}	rpm	500	375	300	250	200	150	200	125	100	100	75	60	50	37.5	–	**1F.2205-2AF..-0..0-Z**
			M_{2N}	Nm	8	10.7	13.5	18.6	21.5	27	23	31.5	39.5	41.5	52	66	84	106	–	■■■ + ■■■ + . . .
			$M_{2,0}$	Nm	9	12	15	21	24	30	26.5	35	44	47	59	73	94	110	–	
			M_{2max}	Nm	31	41.5	52	73	80	61	93	124	155	165	192	176	192	176	–	

➥ Continued on the next page

Planetary gearbox data																
Gearbox type:			**NRB080, 1-stage**						**NRB080, 2-stage**							
1. Order code			**A31**						**A32**							
	i		**3**	**4**	**5**	**7**	**8**	**10**	**9**	**12**	**15**	**16**	**20**	**25**	**32**	**40**	**64**
2. Order code			**R03**	**R04**	**R05**	**R07**	**R08**	**R10**	**R09**	**R12**	**R15**	**R16**	**R20**	**R25**	**R32**	**R40**	**R64**
	$M_{2N,G}$	Nm	85	115	110	65	50	38	130	120	110	120	120	110	120	110	50
	$M_{2max,G}$	Nm	136	184	176	104	80	61	208	192	176	192	192	176	192	176	80
	$M_{2Em.Off}$	Nm	180	240	220	178	190	200	260	240	220	240	240	220	240	220	190
	$J_{1,G}$	kg cm²	0.654	0.455	0.423	0.379	0.37	0.359	0.613	0.589	0.586	0.446	0.406	0.404	0.366	0.365	0.366
	$\varphi_{2,G}$	'	7						9								

Color legend:

	$M_{max,M} \times i < M_{2N,G}$	**The motor and gearbox combination is fatigue-proof**
	$M_{2N,G} < M_{max,M} \times i < M_{2max,G}$	**Check acceleration and inertias, perform service life calculation if necessary**
	$M_{max,M} \times i > M_{2max,G}$	**The motor can destroy the gearbox, check acceleration and inertias, perform service life calculation if necessary**

© Siemens 2022

Gearbox type NRB080

SIMOTICS S-1FK2 and S-1FT2 Compact servomotors with planetary gearbox NRB080 1 and 2-stage (continued)

Servomotor data $M_{0,M}$ Nm	M_{maxM} Nm	J_M ($J_{M,Br}$) kg cm²	Selection data servomotors with planetary gearbox																	Servomotors with planetary gearbox
5.01 ... 5.12	17.3 ... 17.5	5.1 (6)	n_{2N}	rpm	500	375	300	250	200	150	200	125	100	100	75	60	50	–	–	1F.2205-4AF..-0..0-Z
			M_{2N}	Nm	13.1	17.6	22	29.5	35	38	37	51	64	67	85	107	120	–	–	■■■ + ■■■ + . . .
			$M_{2,0}$	Nm	15.3	20	25.5	35.5	40.5	38	45	60	75	80	100	110	120	–	–	
			M_{2max}	Nm	52	70	87	104	80	61	156	192	176	192	192	176	192	–	–	
5.15 ... 5.26	17.2 ... 17.5	8.672 (10.272)	n_{2N}	rpm	500	375	300	250	200	–	200	125	100	100	75	–	–	–	–	1F.2206-2AF..-0..0-Z
			M_{2N}	Nm	12.9	17.3	21.5	27.5	34	–	33.5	51	63	66	84	–	–	–	–	■■■ + ■■■ + . . .
			$M_{2,0}$	Nm	15.7	21	26	36.5	42	–	46.5	61	77	82	103	–	–	–	–	
			M_{2max}	Nm	52	69	87	104	80	–	155	192	176	192	192	–	–	–	–	
10 ... 10.3	34.6 ... 35.2	15.972 (17.672)	n_{2N}	rpm	500	375	300	200	200	–	150	125	100	100	75	–	–	–	–	1F.2206-4AF..-0..0-Z
			M_{2N}	Nm	21	28	35.5	53	50	–	67	79	98	95	120	–	–	–	–	■■■ + ■■■ + . . .
			$M_{2,0}$	Nm	30.5	41	51	65	50	–	90	120	110	120	120	–	–	–	–	
			M_{2max}	Nm	105	140	175	104	79	–	208	192	176	192	191	–	–	–	–	

Planetary gearbox data																
Gearbox type:			NRB080, 1-stage						NRB080, 2-stage							
1. Order code			A31						A32							
	i		3	4	5	7	8	10	9	12	15	16	20	25	32	40	64
2. Order code			R03	R04	R05	R07	R08	R10	R09	R12	R15	R16	R20	R25	R32	R40	R64
	$M_{2N,G}$	Nm	85	115	110	65	50	38	130	120	110	120	120	110	120	110	50
	$M_{2max,G}$	Nm	136	184	176	104	80	61	208	192	176	192	192	176	192	176	80
	$M_{2Em.Off}$	Nm	180	240	220	178	190	200	260	240	220	240	240	220	240	220	190
	$J_{1,G}$	kg cm²	0.654	0.455	0.423	0.379	0.37	0.359	0.613	0.589	0.586	0.446	0.406	0.404	0.366	0.365	0.366
	$\varphi_{2,G}$	'	7						9								

Color legend:		
	$M_{max,M} \times i < M_{2N,G}$	The motor and gearbox combination is fatigue-proof
	$M_{2N,G} < M_{max,M} \times i < M_{2max,G}$	Check acceleration and inertias, perform service life calculation if necessary
	$M_{max,M} \times i > M_{2max,G}$	The motor can destroy the gearbox, check acceleration and inertias, perform service life calculation if necessary

© Siemens 2022

Servomotor data			Selection data servomotors with planetary gearbox									Servomotors with planetary gearbox
$M_{0,M}$	$M_{max,M}$	J_M ($J_{M,Br}$)										
Nm	Nm	kg cm²										
SIMOTICS S-1FK2 and S-1FT2 High Dynamic servomotors with planetary gearbox NRB080 3-stage												
0.517 ... 0.544	1.79 ... 1.83	0.093 (0.112)	n_{2N}	rpm	50	37.5	30	25	20	15	12.5	10	**1F.2103-2AG..-0..0-Z**
			M_{2N}	Nm	21	29.5	37	42.5	60	77	96	110	■■■ + ■■■ + . . .
			$M_{2,0}$	Nm	31.5	42	52	63	84	105	120	110	
			M_{2max}	Nm	107	143	179	176	192	176	192	176	
1.13 ... 1.15	3.78 ... 3.88	0.139 (0.158)	n_{2N}	rpm	50	37.5	30	25	20	–	–	–	**1F.2103-4AG..-0..0-Z**
			M_{2N}	Nm	49	66	83	98	120	–	–	–	■■■ + ■■■ + . . .
			$M_{2,0}$	Nm	67	90	112	110	120	–	–	–	
			M_{2max}	Nm	176	192	192	176	192	–	–	–	
1.14 ... 1.16	3.5 ... 3.59	0.35 (0.43)	n_{2N}	rpm	25	20	15	12.5	10	–	–	–	**1F.2104-4AF..-2..0-Z**
			M_{2N}	Nm	65	86	109	110	120	–	–	–	■■■ + ■■■ + . . .
			$M_{2,0}$	Nm	68	91	114	110	120	–	–	–	
			M_{2max}	Nm	176	192	192	176	192	–	–	–	
1.13 ... 1.16	3.6 ... 3.69	0.35 (0.43)	n_{2N}	rpm	50	37.5	30	25	20	–	–	–	**1F.2104-4AK..-2..0-Z**
			M_{2N}	Nm	59	81	101	110	120	–	–	–	■■■ + ■■■ + . . .
			$M_{2,0}$	Nm	68	90	113	110	120	–	–	–	
			M_{2max}	Nm	176	192	192	176	192	–	–	–	
2.21 ... 2.26	7.08 ... 7.27	0.56 (0.65)	n_{2N}	rpm	25	20	15	–	–	–	–	–	**1F.2104-5AF..-2..0-Z**
			M_{2N}	Nm	110	120	120	–	–	–	–	–	■■■ + ■■■ + . . .
			$M_{2,0}$	Nm	110	120	120	–	–	–	–	–	
			M_{2max}	Nm	176	192	192	–	–	–	–	–	
2.2 ... 2.25	7.17 ... 7.36	0.56 (0.65)	n_{2N}	rpm	50	37.5	30	–	–	–	–	–	**1F.2104-5AK..-2..0-Z**
			M_{2N}	Nm	99	120	120	–	–	–	–	–	■■■ + ■■■ + . . .
			$M_{2,0}$	Nm	110	120	120	–	–	–	–	–	
			M_{2max}	Nm	176	192	192	–	–	–	–	–	
2.95 ... 3.01	9.49 ... 9.73	0.76 (0.84)	n_{2N}	rpm	25	–	–	–	–	–	–	–	**1F.2104-6AF..-2..0-Z**
			M_{2N}	Nm	110	–	–	–	–	–	–	–	■■■ + ■■■ + . . .
			$M_{2,0}$	Nm	110	–	–	–	–	–	–	–	
			M_{2max}	Nm	176	–	–	–	–	–	–	–	

Planetary gearbox data									
Gearbox type:			**NRB080, 3-stage**						
1. Order code			**A33**						
i			**60**	**80**	**100**	**120**	**160**	**200**	**256**	**320**
2. Order code			**R60**	**R80**	**R01**	**R21**	**R61**	**R02**	**R52**	**R23**
$M_{2N,G}$		Nm	110	120	120	110	120	110	120	110
$M_{2max,G}$		Nm	176	192	192	176	192	176	192	176
$M_{2Em.Off}$		Nm	220	240	240	220	240	220	240	220
$J_{1,G}$		kg cm²	0.584	0.405	0.404	0.59	0.365	0.365	0.366	0.366
$\varphi_{2,G}$		'	11							

Color legend:		
	$M_{max,M} \times i < M_{2N,G}$	**The motor and gearbox combination is fatigue-proof**
	$M_{2N,G} < M_{max,M} \times i < M_{2max,G}$	**Check acceleration and inertias, perform service life calculation if necessary**
	$M_{max,M} \times i > M_{2max,G}$	**The motor can destroy the gearbox, check acceleration and inertias, perform service life calculation if necessary**

© Siemens 2022

Gearbox type NRB080

Servomotor data			Selection data servomotors with planetary gearbox									Servomotors with planetary gearbox
$M_{0,M}$	M_{maxM}	J_M ($J_{M,Br}$)										
Nm	Nm	kg cm²										
SIMOTICS S-1FK2 and S-1FT2 Compact servomotors with planetary gearbox NRB080 3-stage												
0.511	1.69	0.2	n_{2N}	rpm	50	37.5	30	25	20	15	12.5	10	**1F.2203-2AG..-0..0-Z**
...	...	(0.22)	M_{2N}	Nm	21.5	30	38	43.5	60	79	97	110	■■■ + ■■■ + . . .
0.537	1.73		$M_{2,0}$	Nm	31.5	42.5	53	63	85	106	120	110	
			M_{2max}	Nm	101	135	169	176	192	176	192	176	
1.13	3.5	0.35	n_{2N}	rpm	50	37.5	30	25	20	–	–	–	**1F.2203-4AG..-0..0-Z**
...	...	(0.37)	M_{2N}	Nm	55	75	93	110	120	–	–	–	■■■ + ■■■ + . . .
1.16	3.59		$M_{2,0}$	Nm	68	91	113	110	120	–	–	–	
			M_{2max}	Nm	176	192	192	176	192	–	–	–	
2.17	6.68	1.23	n_{2N}	rpm	25	20	15	–	–	–	–	–	**1F.2204-5AF..-2..0-Z**
...	...	(1.31)	M_{2N}	Nm	110	120	120	–	–	–	–	–	■■■ + ■■■ + . . .
2.22	6.86		$M_{2,0}$	Nm	110	120	120	–	–	–	–	–	
			M_{2max}	Nm	176	192	192	–	–	–	–	–	
2.18	6.68	1.23	n_{2N}	rpm	50	37.5	30	–	–	–	–	–	**1F.2204-5AK..-2..0-Z**
...	...	(1.31)	M_{2N}	Nm	93	120	120	–	–	–	–	–	■■■ + ■■■ + . . .
2.23	6.86		$M_{2,0}$	Nm	110	120	120	–	–	–	–	–	
			M_{2max}	Nm	176	192	192	–	–	–	–	–	
2.93	9	1.61	n_{2N}	rpm	25	–	–	–	–	–	–	–	**1F.2204-6AF..-2..0-Z**
...	...	(1.69)	M_{2N}	Nm	110	–	–	–	–	–	–	–	■■■ + ■■■ + . . .
3	9.22		$M_{2,0}$	Nm	110	–	–	–	–	–	–	–	
			M_{2max}	Nm	176	–	–	–	–	–	–	–	
2.89	10.2	3.15	n_{2N}	rpm	25	–	–	–	–	–	–	–	**1F.2205-2AF..-0..0-Z**
...	...	(4.05)	M_{2N}	Nm	110	–	–	–	–	–	–	–	■■■ + ■■■ + . . .
3.02	10.5		$M_{2,0}$	Nm	110	–	–	–	–	–	–	–	
			M_{2max}	Nm	176	–	–	–	–	–	–	–	

Planetary gearbox data									
Gearbox type:			**NRB080, 3-stage**						
1. Order code			**A33**						
	i		**60**	**80**	**100**	**120**	**160**	**200**	**256**	**320**
2. Order code			**R60**	**R80**	**R01**	**R21**	**R61**	**R02**	**R52**	**R23**
	$M_{2N,G}$	Nm	110	120	120	110	120	110	120	110
	$M_{2max,G}$	Nm	176	192	192	176	192	176	192	176
	$M_{2Em.Off}$	Nm	220	240	240	220	240	220	240	220
	$J_{1,G}$	kg cm²	0.584	0.405	0.404	0.59	0.365	0.365	0.366	0.366
	$\varphi_{2,G}$	'	11							

Color legend:		
	$M_{max,M} \times i < M_{2N,G}$	**The motor and gearbox combination is fatigue-proof**
	$M_{2N,G} < M_{max,M} \times i < M_{2max,G}$	**Check acceleration and inertias, perform service life calculation if necessary**
	$M_{max,M} \times i > M_{2max,G}$	**The motor can destroy the gearbox, check acceleration and inertias, perform service life calculation if necessary**

© Siemens 2022

Selection and ordering data

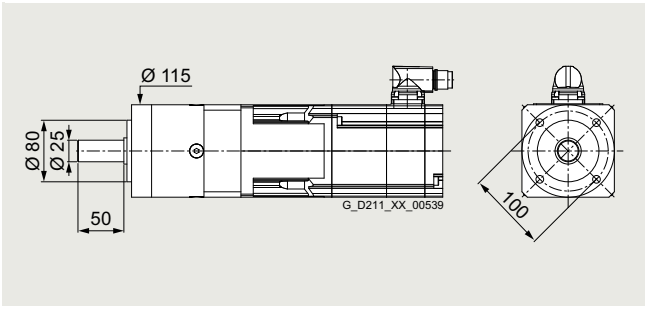

Permissible output shaft loads		
Average radial force for 20000 h	$F_{R,eq}$	1750 N
Average axial force for 20000 h	$F_{A,eq}$	2500 N
Average radial force for 30000 h	$F_{R,eq}$	1500 N
Average axial force for 30000 h	$F_{A,eq}$	2100 N
Maximum radial force	$F_{R,max}$	2000 N
Maximum axial force	$F_{A,max}$	3800 N

Servomotor data			Selection data servomotors with planetary gearbox																	Servomotors with planetary gearbox
$M_{0,M}$	M_{maxM}	J_M ($J_{M,Br}$)																		
Nm	Nm	kg cm²																		
SIMOTICS S-1FK2 and S-1FT2 High Dynamic servomotors with planetary gearbox NRB120 1 and 2-stage																				
0.408	1.7	0.093	n_{2N}	rpm	500	500	375	375	300	300	200	150	150	150	125	100	100	75	50	**1F.2103-2AG..-0..0-Z**
...	...	(0.112)	M_{2N}	Nm	0.81	0.96	1.59	2	2.6	2.85	2.9	4	4.15	4.4	6.1	7.9	9.3	12.6	19.3	■■■ + ■■■ + . . .
0.478	1.75		M_{2_0}	Nm	1.22	1.71	2.2	3.15	3.65	4.6	4.1	5.5	7	7.4	9.4	11.8	15.1	19	30.5	
			M_{2max}	Nm	5.1	6.8	8.6	12.2	13.9	17.5	15.6	20.5	26	27.5	34.5	43.5	55	69	111	
1.02	3.71	0.139	n_{2N}	rpm	600	500	375	300	300	250	250	200	150	150	125	100	75	75	37.5	**1F.2103-4AG..-0..0-Z**
...	...	(0.158)	M_{2N}	Nm	2.35	3.15	4.75	6.8	7.2	9.1	7.3	9.1	13	13.3	17.8	22.5	32	32.5	64	■■■ + ■■■ + . . .
1.07	3.8		M_{2_0}	Nm	3	4.1	5.2	7.4	8.5	10.7	9.5	12.7	15.9	17	21	26.5	34	42.5	68	
			M_{2max}	Nm	11.2	15	18.9	26.5	30	38	33.5	45	56	60	75	94	120	150	192	
1.03	3.43	0.35	n_{2N}	rpm	500	375	300	250	200	150	200	125	100	100	75	60	50	37.5	25	**1F.2104-4AF..-0..0-Z**
...	...	(0.43)	M_{2N}	Nm	2.75	3.8	4.9	7	8.2	10.3	8.6	11.8	14.8	15.9	20	25.5	33	41.5	66	■■■ + ■■■ + . . .
1.09	3.51		M_{2_0}	Nm	3.05	4.15	5.3	7.5	8.6	10.8	9.6	12.9	16.2	17.2	21.5	27	34.5	43	69	
			M_{2max}	Nm	10.4	13.9	17.4	24.5	28	35	31	41.5	52	55	69	86	111	139	192	
1.02	3.53	0.35	n_{2N}	rpm	750	600	500	375	375	300	300	200	150	150	150	125	100	75	50	**1F.2104-4AK..-0..0-Z**
...	...	(0.43)	M_{2N}	Nm	2.35	3.45	4.7	6.8	7.8	9.9	7.5	11.2	14.2	15.2	18.9	22.5	31.5	40	63	■■■ + ■■■ + . . .
1.08	3.61		M_{2_0}	Nm	3.05	4.15	5.2	7.4	8.5	10.7	9.5	12.8	16	17.1	21.5	26.5	34.5	43	69	
			M_{2max}	Nm	10.7	14.3	17.9	25	28.5	36	32	42.5	53	57	71	89	114	143	192	
2.13	7.01	0.56	n_{2N}	rpm	500	375	300	250	200	150	200	125	100	100	75	60	50	37.5	25	**1F.2104-5AF..-0..0-Z**
...	...	(0.65)	M_{2N}	Nm	6	8.2	10.4	14.7	16.9	21	18.4	24.5	31	33	41.5	52	67	84	120	■■■ + ■■■ + . . .
2.18	7.19		M_{2_0}	Nm	6.4	8.6	10.8	15.2	17.4	21.5	19.4	25.5	32.5	34.5	43	54	69	86	120	
			M_{2max}	Nm	21	28.5	35.5	50	57	71	64	85	106	113	142	177	225	280	192	
2.12	7.1	0.56	n_{2N}	rpm	600	500	500	375	300	250	250	200	150	150	125	100	75	75	50	**1F.2104-5AK..-0..0-Z**
...	...	(0.65)	M_{2N}	Nm	5.8	7.6	8	12.4	16.1	20	16.8	20.5	28.5	29	38	48	66	68	100	■■■ + ■■■ + . . .
2.17	7.28		M_{2_0}	Nm	6.3	8.5	10.7	15.1	17.3	21.5	19.3	25.5	32	34	43	53	68	86	120	
			M_{2max}	Nm	21.5	29	36	50	58	72	64	86	108	115	144	179	230	285	192	
2.87	9.39	0.76	n_{2N}	rpm	500	375	300	250	200	150	200	125	100	100	75	60	50	37.5	25	**1F.2104-6AF..-0..0-Z**
...	...	(0.84)	M_{2N}	Nm	8.3	11.2	14.1	19.9	22.5	28.5	25	33.5	42	45	56	70	91	114	120	■■■ + ■■■ + . . .
2.93	9.64		M_{2_0}	Nm	8.6	11.6	14.5	20	23	29	26	34.5	43.5	46.5	58	72	93	116	120	
			M_{2max}	Nm	28.5	38	48	67	77	96	85	114	143	152	190	235	300	368	192	

➥ Continued on the next page

Planetary gearbox data																
Gearbox type:			**NRB120, 1-stage**						**NRB120, 2-stage**							
1. Order code			**A41**						**A42**							
	i		**3**	**4**	**5**	**7**	**8**	**10**	**9**	**12**	**15**	**16**	**20**	**25**	**32**	**40**	**64**
2. Order code			**R03**	**R04**	**R05**	**R07**	**R08**	**R10**	**R09**	**R12**	**R15**	**R16**	**R20**	**R25**	**R32**	**R40**	**R64**
	$M_{2N,G}$	Nm	115	155	195	135	120	95	210	260	230	260	260	230	260	230	120
	$M_{2max,G}$	Nm	184	248	312	216	192	152	336	416	368	416	416	368	416	368	192
	$M_{2Em.Off}$	Nm	390	520	500	340	380	480	500	520	500	520	520	500	520	500	380
	$J_{1,G}$	kg cm²	2.36	1.84	1.63	1.46	1.43	1.38	2.29	2.22	2.2	1.75	1.57	1.57	1.42	1.42	1.41
	$\varphi_{2,G}$	'	7						9								

Color legend:		
	$M_{max,M} \times i < M_{2N,G}$	**The motor and gearbox combination is fatigue-proof**
	$M_{2N,G} < M_{max,M} \times i < M_{2max,G}$	**Check acceleration and inertias, perform service life calculation if necessary**
	$M_{max,M} \times i > M_{2max,G}$	**The motor can destroy the gearbox, check acceleration and inertias, perform service life calculation if necessary**

© Siemens 2022

SIMOTICS S-1FK2 and S-1FT2 servo planetary geared motors

for servo converters with line connection 230 V 1 AC / 240 V 3 AC

Gearbox type NRB120

Servomotor data $M_{0,M}$ Nm	M_{maxM} Nm	J_M ($J_{M,Br}$) kg cm²	Selection data servomotors with planetary gearbox																	Servomotors with planetary gearbox
SIMOTICS S-1FK2 and S-1FT2 High Dynamic servomotors with planetary gearbox NRB120 1 and 2-stage (continued)																				
4.56 ... 4.66	14.1 ... 14.5	1.71 (2.55)	n_{2N}	rpm	500	375	300	250	200	150	200	125	100	100	75	60	50	37.5	–	**1F.2105-4AF..-0..0-Z**
			M_{2N}	Nm	13	17.7	22	30.5	36	45.5	37.5	52	66	69	89	111	141	179	–	■■■ + ■■■ + . . .
			$M_{2,0}$	Nm	13.8	18.5	23	32.5	37	46.5	41.5	55	69	73	92	115	147	184	–	
			M_{2max}	Nm	43.5	58	72	101	116	145	129	172	215	225	285	355	416	368	–	
7.46 ... 7.62	22.8 ... 23.4	2.65 (3.5)	n_{2N}	rpm	500	375	300	250	200	150	200	125	100	100	75	60	50	37.5	–	**1F.2105-6AF..-0..0-Z**
			M_{2N}	Nm	18.8	25.5	33	43.5	53	68	51	78	98	101	131	164	205	230	–	■■■ + ■■■ + . . .
			$M_{2,0}$	Nm	22.5	30	38	53	60	76	68	90	113	120	150	188	240	230	–	
			M_{2max}	Nm	70	93	116	163	186	152	205	275	345	365	416	368	416	368	–	
7.95 ... 8.1	23.4 ... 23.8	4.6 (6.3)	n_{2N}	rpm	500	375	300	250	200	150	200	125	100	100	75	60	50	37.5	–	**1F.2106-3AF..-0..0-Z**
			M_{2N}	Nm	19.4	26.5	34	45	54	69	52	79	99	103	133	166	210	230	–	■■■ + ■■■ + . . .
			$M_{2,0}$	Nm	24	32	40	56	64	81	71	95	119	127	159	198	255	230	–	
			M_{2max}	Nm	71	95	118	166	189	152	210	280	350	375	416	368	416	365	–	
10.3 ... 10.5	31.1 ... 31.6	6 (7.6)	n_{2N}	rpm	500	375	300	250	200	150	200	125	100	100	75	60	50	–	–	**1F.2106-4AF..-0..0-Z**
			M_{2N}	Nm	23.5	32.5	41.5	53	66	85	60	97	121	123	163	200	255	–	–	■■■ + ■■■ + . . .
			$M_{2,0}$	Nm	31.5	42	52	73	84	95	93	124	155	165	205	230	260	–	–	
			M_{2max}	Nm	94	126	157	216	192	152	280	370	368	416	416	368	416	–	–	
14.6 ... 14.9	40.3 ... 41	8.7 (10.4)	n_{2N}	rpm	500	375	300	250	200	150	150	125	100	100	75	60	50	–	–	**1F.2106-6AF..-0..0-Z**
			M_{2N}	Nm	31	42	54	69	85	95	101	122	151	152	200	230	260	–	–	■■■ + ■■■ + . . .
			$M_{2,0}$	Nm	44.5	59	74	104	119	95	131	175	215	230	260	230	260	–	–	
			M_{2max}	Nm	122	163	200	216	192	152	336	416	368	416	416	368	416	–	–	
SIMOTICS S-1FK2 and S-1FT2 Compact servomotors with planetary gearbox NRB120 1 and 2-stage																				
0.401 ... 0.471	1.6 ... 1.65	0.2 (0.22)	n_{2N}	rpm	600	500	375	375	300	250	250	150	150	150	125	100	75	75	50	**1F.2203-2AG..-0..0-Z**
			M_{2N}	Nm	0.75	1.09	1.73	2.15	2.85	3.7	2.5	4.2	4.6	4.75	6.7	8.5	12.8	13.2	19.6	■■■ + ■■■ + . . .
			$M_{2,0}$	Nm	1.2	1.68	2.15	3.1	3.6	4.55	4.05	5.4	6.9	7.3	9.2	11.6	14.9	18.7	30	
			M_{2max}	Nm	4.75	6.4	8.1	11.4	13.1	16.5	14.7	19.6	24.5	26	32.5	41	52	65	105	
1.02 ... 1.08	3.43 ... 3.52	0.35 (0.37)	n_{2N}	rpm	600	600	500	375	375	300	250	200	150	150	150	125	100	75	50	**1F.2203-4AG..-0..0-Z**
			M_{2N}	Nm	2.65	3.1	4.6	6.8	7.1	9.6	8.4	11.2	14.2	15.2	17.8	20.5	29.5	39	60	■■■ + ■■■ + . . .
			$M_{2,0}$	Nm	3.05	4.15	5.2	7.4	8.5	10.7	9.5	12.8	16.1	17.2	21.5	26.5	34.5	43	69	
			M_{2max}	Nm	10.4	13.9	17.4	24.5	28	35	31	41.5	52	55	69	87	111	139	192	
2.09 ... 2.14	6.61 ... 6.78	1.23 (1.31)	n_{2N}	rpm	500	375	300	250	200	150	200	125	100	100	75	60	50	37.5	25	**1F.2204-5AF..-0..0-Z**
			M_{2N}	Nm	5.9	8	10.1	14.3	16.5	20.5	17.9	24	30	32	40.5	51	66	82	120	■■■ + ■■■ + . . .
			$M_{2,0}$	Nm	6.2	8.4	10.6	14.9	17	21	19	25	31.5	34	42.5	53	68	85	120	
			M_{2max}	Nm	20	27	33.5	47	54	67	60	80	100	107	134	167	210	265	192	
2.11 ... 2.16	6.61 ... 6.78	1.23 (1.31)	n_{2N}	rpm	600	500	375	375	300	250	250	200	150	150	125	100	75	60	37.5	**1F.2204-5AK..-0..0-Z**
			M_{2N}	Nm	5.7	7.4	10.1	11.7	15.6	19.4	16.3	20	28	28	36.5	46	65	82	120	■■■ + ■■■ + . . .
			$M_{2,0}$	Nm	6.3	8.4	10.6	15	17.2	21.5	19.2	25.5	32	34	42.5	53	68	85	120	
			M_{2max}	Nm	20	27	33.5	47	54	67	60	80	100	107	134	167	210	265	192	
2.86 ... 2.92	8.9 ... 9.13	1.61 (1.69)	n_{2N}	rpm	500	375	300	250	200	150	200	125	100	100	75	60	50	37.5	25	**1F.2204-6AF..-0..0-Z**
			M_{2N}	Nm	8.2	11.1	14	19.7	22.5	28.5	24.5	33	41.5	44.5	56	70	90	113	120	■■■ + ■■■ + . . .
			$M_{2,0}$	Nm	8.6	11.5	14.4	20	23	29	26	34.5	43	46	57	72	92	115	120	
			M_{2max}	Nm	27	36	45.5	63	73	91	81	108	135	144	180	225	285	360	192	

➥ Continued on the next page

Planetary gearbox data																
Gearbox type:			**NRB120, 1-stage**						**NRB120, 2-stage**							
1. Order code			**A41**						**A42**							
	i		**3**	**4**	**5**	**7**	**8**	**10**	**9**	**12**	**15**	**16**	**20**	**25**	**32**	**40**	**64**
2. Order code			**R03**	**R04**	**R05**	**R07**	**R08**	**R10**	**R09**	**R12**	**R15**	**R16**	**R20**	**R25**	**R32**	**R40**	**R64**
	$M_{2N,G}$	Nm	115	155	195	135	120	95	210	260	230	260	260	230	260	230	120
	$M_{2max,G}$	Nm	184	248	312	216	192	152	336	416	368	416	416	368	416	368	192
	$M_{2Em.Off}$	Nm	390	520	500	340	380	480	500	520	500	520	520	500	520	500	380
	$J_{1,G}$	kg cm²	2.36	1.84	1.63	1.46	1.43	1.38	2.29	2.22	2.2	1.75	1.57	1.57	1.42	1.42	1.41
	$\varphi_{2,G}$	'	7						9								

Color legend:		
	$M_{max,M} \times i < M_{2N,G}$	The motor and gearbox combination is fatigue-proof
	$M_{2N,G} < M_{max,M} \times i < M_{2max,G}$	Check acceleration and inertias, perform service life calculation if necessary
	$M_{max,M} \times i > M_{2max,G}$	The motor can destroy the gearbox, check acceleration and inertias, perform service life calculation if necessary

© Siemens 2022

Servomotor data $M_{0,M}$ Nm	M_{maxM} Nm	J_M ($J_{M,Br}$) kg cm²	Selection data servomotors with planetary gearbox																	Servomotors with planetary gearbox
SIMOTICS S-1FK2 and S-1FT2 Compact servomotors with planetary gearbox NRB120 1 and 2-stage (continued)																				
3.12 ... 3.23	10.1 ... 10.4	3.15 (4.05)	n_{2N}	rpm	500	375	300	250	200	150	200	125	100	100	75	60	50	37.5	25	**1F.2205-2AF..-0..0-Z**
			M_{2N}	Nm	7.9	10.8	13.8	19.2	22	28.5	23	32.5	40.5	43	55	69	88	112	120	■■■ + ■■■ + . . .
			$M_{2,0}$	Nm	9.5	12.7	16	22.5	25.5	32	28.5	38	47.5	50	63	79	101	127	120	
			M_{2max}	Nm	31	41.5	51	72	83	103	92	123	154	164	205	255	325	368	192	
5.27 ... 5.46	17 ... 17.4	5.1 (6)	n_{2N}	rpm	500	375	300	250	200	150	200	125	100	100	75	60	50	37.5	–	**1F.2205-4AF..-0..0-Z**
			M_{2N}	Nm	12.6	17.5	22.5	30	36.5	46.5	35.5	54	67	70	91	113	144	183	–	■■■ + ■■■ + . . .
			$M_{2,0}$	Nm	16.2	21.5	27	38	43.5	54	48	64	80	85	107	134	171	210	–	
			M_{2max}	Nm	52	69	87	121	139	152	155	205	255	275	340	368	416	368	–	
5.52 ... 5.62	17.2 ... 17.4	7.8 (9.4)	n_{2N}	rpm	500	375	300	250	200	150	200	125	100	100	75	60	50	37.5	–	**1F.2206-2AF..-0..0-Z**
			M_{2N}	Nm	13.6	18.4	23	31.5	37.5	47.5	39	55	68	72	92	115	147	186	–	■■■ + ■■■ + . . .
			$M_{2,0}$	Nm	16.7	22	27.5	39	44.5	56	49.5	66	82	88	110	138	176	220	–	
			M_{2max}	Nm	52	69	87	121	139	152	155	205	255	275	340	368	416	368	–	
10.8 ... 11	34.6 ... 35.2	15.1 (16.8)	n_{2N}	rpm	500	375	300	250	200	150	200	125	100	100	75	60	50	–	–	**1F.2206-4AF..-0..0-Z**
			M_{2N}	Nm	24	33	42.5	54	67	89	62	99	123	125	167	205	255	–	–	■■■ + ■■■ + . . .
			$M_{2,0}$	Nm	32.5	43.5	54	76	87	95	97	129	162	172	215	230	260	–	–	
			M_{2max}	Nm	105	140	175	216	192	152	310	416	368	416	416	368	416	–	–	
15.5 ... 15.8	49 ... 49.8	31.96 (35.36)	n_{2N}	rpm	375	250	200	150	125	100	100	100	75	75	50	50	–	–	–	**1F.2208-3AC..-0..0-Z**
			M_{2N}	Nm	34.5	50	63	87	103	95	119	130	170	172	245	230	–	–	–	■■■ + ■■■ + . . .
			$M_{2,0}$	Nm	47	63	79	110	120	95	140	186	230	245	260	230	–	–	–	
			M_{2max}	Nm	149	198	245	216	192	152	336	416	368	416	416	368	–	–	–	
19.3 ... 19.7	63.5 ... 64.5	41.16 (46.76)	n_{2N}	rpm	375	250	200	150	125	–	100	100	75	75	50	–	–	–	–	**1F.2208-4AC..-0..0-Z**
			M_{2N}	Nm	39.5	58	73	101	118	–	138	142	190	189	260	–	–	–	–	■■■ + ■■■ + . . .
			$M_{2,0}$	Nm	58	78	98	135	120	–	174	230	230	260	260	–	–	–	–	
			M_{2max}	Nm	184	248	312	216	192	–	336	416	368	416	416	–	–	–	–	
23.1 ... 23.5	77.1 ... 78.2	50.46 (55.96)	n_{2N}	rpm	375	250	200	150	125	–	100	75	75	60	–	–	–	–	–	**1F.2208-5AC..-0..0-Z**
			M_{2N}	Nm	42.5	64	81	110	120	–	152	200	200	250	–	–	–	–	–	■■■ + ■■■ + . . .
			$M_{2,0}$	Nm	70	94	117	135	120	–	205	260	230	260	–	–	–	–	–	
			M_{2max}	Nm	184	248	312	216	192	–	336	416	368	415	–	–	–	–	–	

Planetary gearbox data																
Gearbox type:		**NRB120, 1-stage**						**NRB120, 2-stage**								
1. Order code		**A41**						**A42**								
i		**3**	**4**	**5**	**7**	**8**	**10**	**9**	**12**	**15**	**16**	**20**	**25**	**32**	**40**	**64**
2. Order code		**R03**	**R04**	**R05**	**R07**	**R08**	**R10**	**R09**	**R12**	**R15**	**R16**	**R20**	**R25**	**R32**	**R40**	**R64**
$M_{2N,G}$	Nm	115	155	195	135	120	95	210	260	230	260	260	230	260	230	120
$M_{2max,G}$	Nm	184	248	312	216	192	152	336	416	368	416	416	368	416	368	192
$M_{2Em.Off}$	Nm	390	520	500	340	380	480	500	520	500	520	520	500	520	500	380
$J_{1,G}$	kg cm²	2.36	1.84	1.63	1.46	1.43	1.38	2.29	2.22	2.2	1.75	1.57	1.57	1.42	1.42	1.41
$\varphi_{2,G}$	'	7						9								

Color legend:		
	$M_{max,M} \times i < M_{2N,G}$	**The motor and gearbox combination is fatigue-proof**
	$M_{2N,G} < M_{max,M} \times i < M_{2max,G}$	**Check acceleration and inertias, perform service life calculation if necessary**
	$M_{max,M} \times i > M_{2max,G}$	**The motor can destroy the gearbox, check acceleration and inertias, perform service life calculation if necessary**

© Siemens 2022

Gearbox type NRB120

Servomotor data $M_{0,M}$ Nm	$M_{max,M}$ Nm	J_M ($J_{M,Br}$) kg cm²	Selection data servomotors with planetary gearbox									Servomotors with planetary gearbox
SIMOTICS S-1FK2 and S-1FT2 High Dynamic servomotors with planetary gearbox NRB120 3-stage												
0.408 ... 0.478	1.7 ... 1.75	0.093 (0.112)	n_{2N}	rpm	37.5	30	25	20	20	15	12.5	10	**1F.2103-2AG..-0..0-Z**
			M_{2N}	Nm	17.8	26.5	32	34	48	64	77	97	■■■ + ■■■ + . . .
			$M_{2,0}$	Nm	28	37.5	47	56	75	94	121	151	
			M_{2max}	Nm	103	138	172	205	275	340	416	368	
1.02 ... 1.07	3.71 ... 3.8	0.139 (0.158)	n_{2N}	rpm	37.5	30	25	20	20	15	10	10	**1F.2103-4AG..-0..0-Z**
			M_{2N}	Nm	54	75	92	105	126	172	245	230	■■■ + ■■■ + . . .
			$M_{2,0}$	Nm	63	85	106	127	170	210	260	230	
			M_{2max}	Nm	220	295	370	368	416	368	416	368	
1.03 ... 1.09	3.43 ... 3.51	0.35 (0.43)	n_{2N}	rpm	25	20	15	12.5	10	7.5	6	5	**1F.2104-4AF..-0..0-Z**
			M_{2N}	Nm	59	80	101	119	164	205	260	230	■■■ + ■■■ + . . .
			$M_{2,0}$	Nm	64	86	107	129	172	215	260	230	
			M_{2max}	Nm	205	275	340	368	416	368	416	368	
1.02 ... 1.08	3.53 ... 3.61	0.35 (0.43)	n_{2N}	rpm	50	37.5	30	25	20	15	12.5	10	**1F.2104-4AK..-0..0-Z**
			M_{2N}	Nm	47.5	76	95	98	157	198	250	230	■■■ + ■■■ + . . .
			$M_{2,0}$	Nm	64	85	107	128	171	210	260	230	
			M_{2max}	Nm	210	280	350	368	416	368	416	368	
2.13 ... 2.18	7.01 ... 7.19	0.56 (0.65)	n_{2N}	rpm	25	20	15	12.5	10	–	–	–	**1F.2104-5AF..-0..0-Z**
			M_{2N}	Nm	123	166	205	230	260	–	–	–	■■■ + ■■■ + . . .
			$M_{2,0}$	Nm	129	171	210	230	260	–	–	–	
			M_{2max}	Nm	416	416	416	368	416	–	–	–	
2.12 ... 2.17	7.1 ... 7.28	0.56 (0.65)	n_{2N}	rpm	37.5	30	25	20	20	–	–	–	**1F.2104-5AK..-0..0-Z**
			M_{2N}	Nm	118	161	194	220	245	–	–	–	■■■ + ■■■ + . . .
			$M_{2,0}$	Nm	128	170	210	230	260	–	–	–	
			M_{2max}	Nm	416	416	416	368	416	–	–	–	
2.87 ... 2.93	9.39 ... 9.64	0.76 (0.84)	n_{2N}	rpm	25	20	15	12.5	10	–	–	–	**1F.2104-6AF..-0..0-Z**
			M_{2N}	Nm	167	220	260	230	260	–	–	–	■■■ + ■■■ + . . .
			$M_{2,0}$	Nm	172	230	260	230	260	–	–	–	
			M_{2max}	Nm	416	416	416	368	416	–	–	–	
4.56 ... 4.66	14.1 ... 14.5	1.71 (2.55)	n_{2N}	rpm	25	20	15	–	–	–	–	–	**1F.2105-4AF..-0..0-Z**
			M_{2N}	Nm	255	260	260	–	–	–	–	–	■■■ + ■■■ + . . .
			$M_{2,0}$	Nm	260	260	260	–	–	–	–	–	
			M_{2max}	Nm	416	416	415	–	–	–	–	–	
7.46 ... 7.62	22.8 ... 23.4	2.65 (3.5)	n_{2N}	rpm	25	–	–	–	–	–	–	–	**1F.2105-6AF..-0..0-Z**
			M_{2N}	Nm	260	–	–	–	–	–	–	–	■■■ + ■■■ + . . .
			$M_{2,0}$	Nm	260	–	–	–	–	–	–	–	
			M_{2max}	Nm	416	–	–	–	–	–	–	–	

Planetary gearbox data									
Gearbox type:		**NRB120, 3-stage**							
1. Order code		**A43**							
i		**60**	**80**	**100**	**120**	**160**	**200**	**256**	**320**
2. Order code		**R60**	**R80**	**R01**	**R21**	**R61**	**R02**	**R52**	**R23**
$M_{2N,G}$	Nm	260	260	260	230	260	230	260	230
$M_{2max,G}$	Nm	416	416	416	368	416	368	416	368
$M_{2Em.Off}$	Nm	520	520	520	500	520	500	520	500
$J_{1,G}$	kg cm²	2.2	1.57	1.56	2.18	1.42	1.42	1.41	1.41
$\varphi_{2,G}$	'	11							

Color legend:		
	$M_{max,M} \times i < M_{2N,G}$	**The motor and gearbox combination is fatigue-proof**
	$M_{2N,G} < M_{max,M} \times i < M_{2max,G}$	**Check acceleration and inertias, perform service life calculation if necessary**
	$M_{max,M} \times i > M_{2max,G}$	**The motor can destroy the gearbox, check acceleration and inertias, perform service life calculation if necessary**

© Siemens 2022

Servomotor data $M_{0,M}$ Nm	M_{maxM} Nm	J_M ($J_{M,Br}$) kg cm²	Selection data servomotors with planetary gearbox									Servomotors with planetary gearbox
SIMOTICS S-1FK2 and S-1FT2 Compact servomotors with planetary gearbox NRB120 3-stage												
0.401 ... 0.471	1.6 ... 1.65	0.2 (0.22)	n_{2N} rpm	37.5	30	25	20	20	15	10	10	1F.2203-2AG..-0..0-Z ■■■ + ■■■ + . . .
			M_{2N} Nm	19.7	29	35	37	49.5	67	100	99	
			$M_{2,0}$ Nm	27.5	37	46.5	56	74	93	119	149	
			M_{2max} Nm	97	130	162	195	260	325	416	368	
1.02 ... 1.08	3.43 ... 3.52	0.35 (0.37)	n_{2N} rpm	50	37.5	30	20	20	15	12.5	10	1F.2203-4AG..-0..0-Z ■■■ + ■■■ + . . .
			M_{2N} Nm	42.5	71	89	113	148	192	235	230	
			$M_{2,0}$ Nm	64	85	107	128	171	210	260	230	
			M_{2max} Nm	205	275	340	368	416	368	416	368	
2.09 ... 2.14	6.61 ... 6.78	1.23 (1.31)	n_{2N} rpm	25	20	15	12.5	10	–	–	–	1F.2204-5AF..-0..0-Z ■■■ + ■■■ + . . .
			M_{2N} Nm	120	162	200	230	260	–	–	–	
			$M_{2,0}$ Nm	126	168	210	230	260	–	–	–	
			M_{2max} Nm	395	416	416	368	416	–	–	–	
2.11 ... 2.16	6.61 ... 6.78	1.23 (1.31)	n_{2N} rpm	37.5	30	25	20	20	–	–	–	1F.2204-5AK..-0..0-Z ■■■ + ■■■ + . . .
			M_{2N} Nm	116	157	188	215	225	–	–	–	
			$M_{2,0}$ Nm	127	169	210	230	260	–	–	–	
			M_{2max} Nm	395	416	416	368	416	–	–	–	
2.86 ... 2.92	8.9 ... 9.13	1.61 (1.69)	n_{2N} rpm	25	20	15	12.5	10	–	–	–	1F.2204-6AF..-0..0-Z ■■■ + ■■■ + . . .
			M_{2N} Nm	165	220	260	230	260	–	–	–	
			$M_{2,0}$ Nm	172	225	260	230	260	–	–	–	
			M_{2max} Nm	416	416	416	368	416	–	–	–	
3.12 ... 3.23	10.1 ... 10.4	3.15 (4.05)	n_{2N} rpm	25	20	15	12.5	–	–	–	–	1F.2205-2AF..-0..0-Z ■■■ + ■■■ + . . .
			M_{2N} Nm	160	210	260	230	–	–	–	–	
			$M_{2,0}$ Nm	187	245	260	230	–	–	–	–	
			M_{2max} Nm	416	416	416	368	–	–	–	–	
5.27 ... 5.46	17 ... 17.4	5.1 (6)	n_{2N} rpm	25	20	–	–	–	–	–	–	1F.2205-4AF..-0..0-Z ■■■ + ■■■ + . . .
			M_{2N} Nm	260	260	–	–	–	–	–	–	
			$M_{2,0}$ Nm	260	260	–	–	–	–	–	–	
			M_{2max} Nm	416	416	–	–	–	–	–	–	

Planetary gearbox data									
Gearbox type:			NRB120, 3-stage						
1. Order code			A43						
	i		60	80	100	120	160	200	256	320
2. Order code			R60	R80	R01	R21	R61	R02	R52	R23
	$M_{2N,G}$	Nm	260	260	260	230	260	230	260	230
	$M_{2max,G}$	Nm	416	416	416	368	416	368	416	368
	$M_{2Em.Off}$	Nm	520	520	520	500	520	500	520	500
	$J_{1,G}$	kg cm²	2.2	1.57	1.56	2.18	1.42	1.42	1.41	1.41
	$\varphi_{2,G}$	'	11							

Color legend:		
	$M_{max,M} \times i < M_{2N,G}$	The motor and gearbox combination is fatigue-proof
	$M_{2N,G} < M_{max,M} \times i < M_{2max,G}$	Check acceleration and inertias, perform service life calculation if necessary
	$M_{max,M} \times i > M_{2max,G}$	The motor can destroy the gearbox, check acceleration and inertias, perform service life calculation if necessary

© Siemens 2022

Gearbox type NRB160

Selection and ordering data

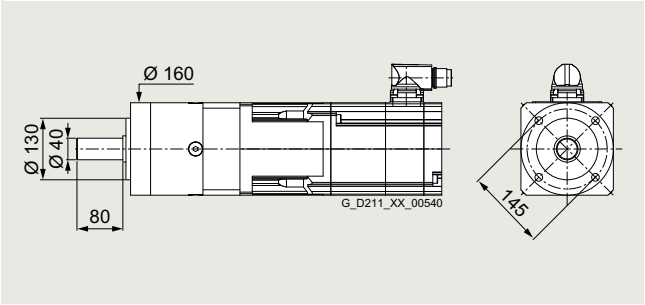

Permissible output shaft loads		
Average radial force for 20000 h	$F_{R,eq}$	5000 N
Average axial force for 20000 h	$F_{A,eq}$	7000 N
Average radial force for 30000 h	$F_{R,eq}$	4200 N
Average axial force for 30000 h	$F_{A,eq}$	6000 N
Maximum radial force	$F_{R,max}$	5000 N
Maximum axial force	$F_{A,max}$	11000 N

3
4

Servomotor data			Selection data servomotors with planetary gearbox														Servomotors with planetary gearbox
$M_{0,M}$	M_{maxM}	J_M ($J_{M,Br}$)															
Nm	Nm	kg cm²															
SIMOTICS S-1FK2 and S-1FT2 High Dynamic servomotors with planetary gearbox NRB160 1 and 2-stage																	
4.16	14	1.71 (2.55)	n_{2N}	rpm	300	250	200	150	100	75	75	60	50	50	37.5	20	**1F.2105-4AF..-0..0-Z**
...	...		M_{2N}	Nm	11.2	14.8	19.5	31	44	57	60	76	95	96	136	245	■■■ + ■■■ + . . .
4.28	14.1		M_{2_0}	Nm	12.4	16.8	21	34	51	63	68	85	106	136	170	270	
			M_{2max}	Nm	42	56	70	113	168	210	220	275	345	445	550	720	
7.13	22.6	2.65 (3.5)	n_{2N}	rpm	300	250	200	150	100	75	75	60	50	37.5	30	20	**1F.2105-6AF..-0..0-Z**
...	...		M_{2N}	Nm	16.5	21	29	43	60	83	82	110	132	187	230	350	■■■ + ■■■ + . . .
7.24	22.9		M_{2_0}	Nm	21	28.5	36	57	86	107	114	143	179	230	285	450	
			M_{2max}	Nm	68	91	114	183	270	340	360	450	560	720	900	720	
7.5	23.1	4.6 (6.3)	n_{2N}	rpm	300	250	200	150	100	75	75	60	50	37.5	30	20	**1F.2106-3AF..-0..0-Z**
...	...		M_{2N}	Nm	17.5	22.5	30.5	45.5	63	88	86	115	139	195	240	365	■■■ + ■■■ + . . .
7.65	23.4		M_{2_0}	Nm	22.5	30	38	61	90	112	120	150	187	240	300	450	
			M_{2max}	Nm	69	93	116	186	275	345	365	460	570	730	920	720	
9.84	30.8	6 (7.6)	n_{2N}	rpm	300	250	200	150	100	75	75	60	50	37.5	30	20	**1F.2106-4AF..-0..0-Z**
...	...		M_{2N}	Nm	22.5	28.5	39	56	76	108	104	140	167	235	295	435	■■■ + ■■■ + . . .
10	31.2		M_{2_0}	Nm	29.5	39.5	50	80	118	147	157	196	245	310	390	450	
			M_{2max}	Nm	93	124	155	245	370	460	490	610	770	980	1120	720	
14.1	40	8.7 (10.4)	n_{2N}	rpm	300	200	200	125	75	60	60	50	37.5	37.5	25	–	**1F.2106-6AF..-0..0-Z**
...	...		M_{2N}	Nm	30	47	51	88	137	172	173	215	285	290	440	–	■■■ + ■■■ + . . .
14.4	40.5		M_{2_0}	Nm	42.5	57	71	114	168	210	225	280	350	450	560	–	
			M_{2max}	Nm	121	162	200	320	480	600	640	800	1000	1280	1120	–	

Planetary gearbox data														
Gearbox type:			NRB160, 1-stage				NRB160, 2-stage							
1. Order code			A51				A52							
	i		3	4	5	8	12	15	16	20	25	32	40	64
2. Order code			R03	R04	R05	R08	R12	R15	R16	R20	R25	R32	R40	R64
	$M_{2N,G}$	Nm	400	450	450	450	800	700	800	800	700	800	700	450
	$M_{2max,G}$	Nm	640	720	720	720	1280	1120	1280	1280	1120	1280	1120	720
	$M_{2Em.Off}$	Nm	800	900	900	900	1600	1400	1600	1600	1400	1600	1400	900
	$J_{1,G}$	kg cm²	12	6.91	5.19	3.73	10.1	9.91	6.06	4.7	4.63	3.55	3.52	3.5
	$\varphi_{2,G}$	'	6				9							

Color legend:		
	$M_{max,M} \times i < M_{2N,G}$	**The motor and gearbox combination is fatigue-proof**
	$M_{2N,G} < M_{max,M} \times i < M_{2max,G}$	**Check acceleration and inertias, perform service life calculation if necessary**
	$M_{max,M} \times i > M_{2max,G}$	**The motor can destroy the gearbox, check acceleration and inertias, perform service life calculation if necessary**

© Siemens 2022

Servomotor data $M_{0,M}$ Nm	M_{maxM} Nm	J_M ($J_{M,Br}$) kg cm²	Selection data servomotors with planetary gearbox														Servomotors with planetary gearbox
SIMOTICS S-1FK2 and S-1FT2 Compact servomotors with planetary gearbox NRB160 1 and 2-stage																	
2.68 ... 2.81	9.91 ... 10	3.15 (4.05)	n_{2N}	rpm	300	250	250	150	100	75	75	75	60	50	37.5	25	**1F.2205-2AF..-0..0-Z**
			M_{2N}	Nm	5.9	8.1	8.9	17.6	25	32	33.5	36.5	47	61	85	127	■■■ + ■■■ + . . .
			$M_{2,0}$	Nm	8	10.9	13.8	22	33	41	44	55	69	88	111	178	
			M_{2max}	Nm	29.5	39.5	49.5	80	119	148	158	198	245	315	395	630	
4.91 ... 5.02	16.8 ... 17	5.1 (6)	n_{2N}	rpm	300	250	200	150	100	75	75	60	50	37.5	30	20	**1F.2205-4AF..-0..0-Z**
			M_{2N}	Nm	10.4	13.4	18.8	28	40	56	55	74	89	127	160	240	■■■ + ■■■ + . . .
			$M_{2,0}$	Nm	14.7	19.8	24.5	40	59	74	78	98	123	158	197	315	
			M_{2max}	Nm	50	67	85	136	200	250	265	335	420	530	670	720	
5.07 ... 5.18	16.9 ... 17.1	7.8 (9.4)	n_{2N}	rpm	300	250	200	150	100	75	75	60	50	37.5	37.5	20	**1F.2206-2AF..-0..0-Z**
			M_{2N}	Nm	12.1	16.1	21	33	47.5	61	64	82	102	134	143	260	■■■ + ■■■ + . . .
			$M_{2,0}$	Nm	15.2	20	25.5	41	61	76	81	102	127	163	200	325	
			M_{2max}	Nm	50	68	85	136	200	250	270	335	420	530	670	720	
10.3 ... 10.5	34.2 ... 34.7	15.1 (16.8)	n_{2N}	rpm	300	250	200	150	75	75	60	60	50	37.5	30	20	**1F.2206-4AF..-0..0-Z**
			M_{2N}	Nm	23	29	39.5	57	106	110	137	143	170	240	300	445	■■■ + ■■■ + . . .
			$M_{2,0}$	Nm	31	41.5	52	84	123	154	164	205	255	325	410	450	
			M_{2max}	Nm	104	138	173	275	410	510	540	680	850	1090	1120	720	
15 ... 15.3	48.7 ... 49.4	29.6 (33)	n_{2N}	rpm	250	200	200	125	75	60	60	50	37.5	30	25	–	**1F.2208-3AC..-0..0-Z**
			M_{2N}	Nm	35	46	48.5	85	134	169	167	205	275	355	425	–	■■■ + ■■■ + . . .
			$M_{2,0}$	Nm	45.5	61	76	122	180	225	240	300	375	480	590	–	
			M_{2max}	Nm	148	197	245	390	580	730	780	970	1120	1280	1120	–	
18.7 ... 19.1	63.1 ... 64.1	38.8 (44.4)	n_{2N}	rpm	250	200	150	125	75	60	50	50	37.5	30	25	–	**1F.2208-4AC..-0..0-Z**
			M_{2N}	Nm	42	54	75	97	154	194	230	230	315	400	480	–	■■■ + ■■■ + . . .
			$M_{2,0}$	Nm	57	76	95	153	220	280	295	370	465	590	700	–	
			M_{2max}	Nm	192	255	320	510	760	940	1010	1260	1120	1280	1120	–	
22.5 ... 23	76.6 ... 77.8	48.1 (53.6)	n_{2N}	rpm	250	200	150	100	60	50	50	37.5	30	25	20	–	**1F.2208-5AC..-0..0-Z**
			M_{2N}	Nm	47.5	61	85	135	210	255	250	340	425	520	650	–	■■■ + ■■■ + . . .
			$M_{2,0}$	Nm	68	91	114	183	270	335	355	445	560	710	700	–	
			M_{2max}	Nm	230	310	385	620	920	1120	1220	1280	1120	1280	1120	–	

Planetary gearbox data													
Gearbox type:		**NRB160, 1-stage**				**NRB160, 2-stage**							
1. Order code		**A51**				**A52**							
i		**3**	**4**	**5**	**8**	**12**	**15**	**16**	**20**	**25**	**32**	**40**	**64**
2. Order code		**R03**	**R04**	**R05**	**R08**	**R12**	**R15**	**R16**	**R20**	**R25**	**R32**	**R40**	**R64**
$M_{2N,G}$	Nm	400	450	450	450	800	700	800	800	700	800	700	450
$M_{2max,G}$	Nm	640	720	720	720	1280	1120	1280	1280	1120	1280	1120	720
$M_{2Em.Off}$	Nm	800	900	900	900	1600	1400	1600	1600	1400	1600	1400	900
$J_{1,G}$	kg cm²	12	6.91	5.19	3.73	10.1	9.91	6.06	4.7	4.63	3.55	3.52	3.5
$\varphi_{2,G}$	'	6				9							

Color legend:		
	$M_{max,M} \times i < M_{2N,G}$	The motor and gearbox combination is fatigue-proof
	$M_{2N,G} < M_{max,M} \times i < M_{2max,G}$	Check acceleration and inertias, perform service life calculation if necessary
	$M_{max,M} \times i > M_{2max,G}$	The motor can destroy the gearbox, check acceleration and inertias, perform service life calculation if necessary

© Siemens 2022

Gearbox type NRK050

Selection and ordering data

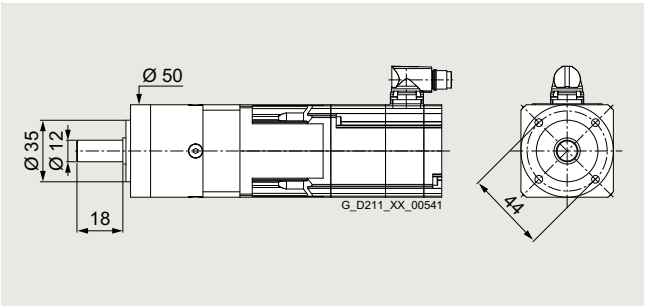

Permissible output shaft loads		
Average radial force for 20000 h	$F_{R,eq}$	800 N
Average axial force for 20000 h	$F_{A,eq}$	1000 N
Average radial force for 30000 h	$F_{R,eq}$	700 N
Average axial force for 30000 h	$F_{A,eq}$	800 N
Maximum radial force	$F_{R,max}$	1300 N
Maximum axial force	$F_{A,max}$	1000 N

3 4

Servomotor data			Selection data servomotors with planetary gearbox																Servomotors with planetary gearbox
$M_{0,M}$	M_{maxM}	J_M ($J_{M,Br}$)																	
Nm	Nm	kg cm²																	
SIMOTICS S-1FK2 and S-1FT2 High Dynamic servomotors with planetary gearbox NRK050 1 and 2-stage																			
0.12	0.52	0.0245	n_{2N}	rpm	1000	750	600	500	375	300	375	250	200	200	150	125	100	75	50	**1F.2102-0AG..-0..0-Z**
...	...	(0.0285)	M_{2N}	Nm	0.24	0.36	0.47	0.66	0.81	1.04	0.84	1.21	1.53	1.62	2.1	2.6	3.35	4.3	6.8	■■■ + ■■■ + . . .
0.131	0.528		M_{2_0}	Nm	0.36	0.49	0.62	0.89	1.02	1.29	1.14	1.54	1.93	2.05	2.55	3.25	4.15	5.2	7.5	
			M_{2max}	Nm	1.56	2.05	2.6	3.65	4.2	5.2	4.7	6.2	7.8	8.3	10.4	13	16.7	20.5	12	
0.27	1.05	0.036	n_{2N}	rpm	1000	750	600	500	375	300	375	250	200	200	150	125	100	75	–	**1F.2102-1AG..-0..0-Z**
...	...	(0.04)	M_{2N}	Nm	0.63	0.88	1.13	1.56	1.87	2.35	1.98	2.75	3.45	3.65	4.65	5.8	7.4	9.5	–	■■■ + ■■■ + . . .
0.28	1.06		M_{2_0}	Nm	0.81	1.09	1.37	1.94	2.2	2.75	2.45	3.3	4.15	4.4	5.5	6.9	8.8	11.1	–	
			M_{2max}	Nm	3.15	4.2	5.3	7.4	8.5	8	9.4	12.6	15.8	16.8	21	21	24	21	–	
0.515	1.85	0.1396	n_{2N}	rpm	1000	750	600	500	375	300	375	250	200	200	150	125	100	75	–	**1F.2103-2AG..-2..0-Z**
...	...	(0.1586)	M_{2N}	Nm	1.05	1.46	1.87	2.45	3.05	3.85	3.15	4.55	5.7	5.9	7.7	9.4	12	13	–	■■■ + ■■■ + . . .
0.524	1.87		M_{2_0}	Nm	1.54	2.05	2.55	3.65	4.15	5	4.65	6.2	7.7	8.2	10.3	12.9	15	13	–	
			M_{2max}	Nm	5.5	7.4	9.3	13	9.5	8	16.6	22	21	24	24	21	24	21	–	
1.08	3.87	0.1856	n_{2N}	rpm	750	600	600	375	375	–	–	250	200	200	150	–	–	–	–	**1F.2103-4AG..-2..0-Z**
...	...	(0.2046)	M_{2N}	Nm	2.2	2.9	3	5	5	–	–	7.6	9.6	9.5	13	–	–	–	–	■■■ + ■■■ + . . .
1.09	3.92		M_{2_0}	Nm	3.25	4.35	5.4	7.6	6	–	–	12.9	13	15	15	–	–	–	–	
			M_{2max}	Nm	11.7	15.6	19.6	13.5	9.5	–	–	24	21	24	24	–	–	–	–	
SIMOTICS S-1FK2 and S-1FT2 Compact servomotors with planetary gearbox NRK050 1 and 2-stage																			
0.566	1.74	0.2466	n_{2N}	rpm	1000	750	600	500	375	300	375	250	200	200	150	125	100	75	–	**1F.2203-2AG..-2..0-Z**
...	...	(0.2666)	M_{2N}	Nm	1.02	1.43	1.84	2.25	3.05	3.85	3	4.5	5.6	5.7	7.6	9.3	11.7	13	–	■■■ + ■■■ + . . .
0.574	1.77		M_{2_0}	Nm	1.69	2.25	2.85	4	4.55	5	5.1	6.8	8.5	9	11.3	13	15	13	–	
			M_{2max}	Nm	5.2	7	8.8	12.3	9.5	8	15.7	21	21	24	24	21	24	21	–	
1.18	3.59	0.3966	n_{2N}	rpm	1000	750	600	375	375	–	–	250	200	200	150	–	–	–	–	**1F.2203-4AG..-2..0-Z**
...	...	(0.4166)	M_{2N}	Nm	2.2	3.1	4.05	6.5	6	–	–	9.9	12.5	12.4	15	–	–	–	–	■■■ + ■■■ + . . .
1.19	3.64		M_{2_0}	Nm	3.55	4.75	5.9	8.3	6	–	–	14.2	13	15	15	–	–	–	–	
			M_{2max}	Nm	10.9	14.5	18.1	13.5	9.5	–	–	24	21	24	24	–	–	–	–	

Planetary gearbox data																	
Gearbox type:			NRK050, 1-stage						NRK050, 2-stage								
1. Order code			B11						B12								
	i		3	4	5	7	8	10	9	12	15	16	20	25	32	40	64
2. Order code			R03	R04	R05	R07	R08	R10	R09	R12	R15	R16	R20	R25	R32	R40	R64
	$M_{2N,G}$	Nm	11	15	13	8.5	6	5	12	15	13	15	15	13	15	13	7.5
	$M_{2max,G}$	Nm	17.5	24	21	13.5	9.5	8	19	24	21	24	24	21	24	21	12
	$M_{2Em.Off}$	Nm	22.5	30	36	26	27	27	33	40	36	40	40	36	40	36	27
	$J_{1,G}$	kg cm²	0.03	0.022	0.02	0.016	0.015	0.015	0.026	0.026	0.025	0.02	0.018	0.018	0.015	0.015	0.015
	$\varphi_{2,G}$	'	15						19								

Color legend:		
	$M_{max,M} \times i < M_{2N,G}$	The motor and gearbox combination is fatigue-proof
	$M_{2N,G} < M_{max,M} \times i < M_{2max,G}$	Check acceleration and inertias, perform service life calculation if necessary
	$M_{max,M} \times i > M_{2max,G}$	The motor can destroy the gearbox, check acceleration and inertias, perform service life calculation if necessary

© Siemens 2022

Selection and ordering data

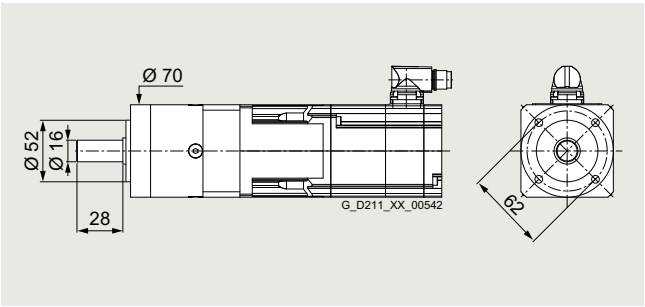

Permissible output shaft loads		
Average radial force for 20000 h	$F_{R,eq}$	1050 N
Average axial force for 20000 h	$F_{A,eq}$	1350 N
Average radial force for 30000 h	$F_{R,eq}$	900 N
Average axial force for 30000 h	$F_{A,eq}$	1000 N
Maximum radial force	$F_{R,max}$	1650 N
Maximum axial force	$F_{A,max}$	2100 N

Servomotor data			Selection data servomotors with planetary gearbox																	Servomotors with planetary gearbox
$M_{0,M}$	M_{maxM}	J_M ($J_{M,Br}$)																		
Nm	Nm	kg cm²																		
SIMOTICS S-1FK2 and S-1FT2 High Dynamic servomotors with planetary gearbox NRK070 1 and 2-stage																				
0.0821	0.477	0.0245	n_{2N}	rpm	–	375	375	375	375	300	300	250	200	200	150	125	100	75	50	30	**1F.2102-0AG..-0..0-Z**
...	...	(0.0285)	M_{2N}	Nm	–	0.2	0.28	0.42	0.47	0.68	0.53	0.75	1.14	1.14	1.62	2.05	2.75	3.6	5.7	9.4	■■■ + ■■■ + . . .
0.121	0.508		M_{2_0}	Nm	–	0.33	0.45	0.7	0.82	1.07	0.94	1.31	1.68	1.8	2.25	2.9	3.75	4.7	7.6	12	
			M_{2max}	Nm	–	1.9	2.4	3.45	3.95	5	4.45	5.9	7.5	8	10	12.6	16.1	20	29	24	
0.221	1	0.036	n_{2N}	rpm	750	600	600	500	375	300	375	250	200	200	150	125	100	75	50	–	**1F.2102-1AG..-0..0-Z**
...	...	(0.04)	M_{2N}	Nm	0.42	0.67	0.84	1.25	1.61	2.1	1.62	2.4	3.25	3.35	4.45	5.5	7.2	9.3	14.7	–	■■■ + ■■■ + . . .
0.269	1.04		M_{2_0}	Nm	0.66	0.93	1.21	1.76	2	2.55	2.25	3.1	3.9	4.2	5.2	6.6	8.5	10.7	17.2	–	
			M_{2max}	Nm	3	4.05	5.1	7.2	8.2	10.3	9.2	12.3	15.4	16.5	20.5	25.5	33	41	29	–	
0.515	1.82	0.093	n_{2N}	rpm	750	750	600	500	375	300	375	250	200	200	150	125	100	75	–	–	**1F.2103-2AG..-2..0-Z**
...	...	(0.112)	M_{2N}	Nm	1	1.28	1.77	2.45	3.15	4.1	3.2	4.75	6.2	6.4	8.5	10.5	13.6	17.4	–	–	■■■ + ■■■ + . . .
0.557	1.86		M_{2_0}	Nm	1.54	2.1	2.65	3.8	4.35	5.5	4.9	6.5	8.2	8.8	11	13.8	17.7	22	–	–	
			M_{2max}	Nm	5.4	7.3	9.2	12.9	14.8	18.5	16.5	22	27.5	29	36.5	46	53	48	–	–	
1.14	3.86	0.139	n_{2N}	rpm	750	600	500	375	375	300	300	250	200	200	150	125	100	75	–	–	**1F.2103-4AG..-2..0-Z**
...	...	(0.158)	M_{2N}	Nm	1.91	2.8	3.7	5.4	5.7	7.5	7	8.8	11.8	11.8	16	19.6	25	30	–	–	■■■ + ■■■ + . . .
1.17	3.91		M_{2_0}	Nm	3.4	4.55	5.7	8.1	9.3	11.7	10.4	13.9	17.4	18.6	23	29	33	30	–	–	
			M_{2max}	Nm	11.6	15.5	19.4	27	29	24	34.5	46	53	53	53	48	53	48	–	–	
1.15	3.58	0.371	n_{2N}	rpm	500	375	300	250	200	150	200	125	100	100	75	60	50	37.5	–	–	**1F.2104-4AF..-2..0-Z**
...	...	(0.451)	M_{2N}	Nm	3.1	4.3	5.5	7.7	9	11.4	9.8	13.5	17	18	22.5	28.5	33	30	–	–	■■■ + ■■■ + . . .
1.19	3.62		M_{2_0}	Nm	3.45	4.65	5.8	8.2	9.4	11.8	10.5	14.1	17.7	18.9	23.5	29.5	33	30	–	–	
			M_{2max}	Nm	10.7	14.4	18	25	28.5	24	32	43	53	53	53	48	53	48	–	–	
1.15	3.68	0.371	n_{2N}	rpm	750	600	600	500	375	300	375	250	200	200	150	125	100	75	–	–	**1F.2104-4AK..-2..0-Z**
...	...	(0.451)	M_{2N}	Nm	2.85	4.1	4.6	6.1	8.3	10.8	8.1	12.5	16	16.7	21.5	26.5	33	30	–	–	■■■ + ■■■ + . . .
1.18	3.72		M_{2_0}	Nm	3.4	4.6	5.8	8.2	9.4	11.8	10.5	14	17.6	18.7	23.5	29	33	30	–	–	
			M_{2max}	Nm	11	14.8	18.5	25.5	29	24	33	44	53	53	53	48	53	48	–	–	
2.26	7.21	0.581	n_{2N}	rpm	500	375	300	250	200	150	200	125	100	100	75	60	–	–	–	–	**1F.2104-5AF..-2..0-Z**
...	...	(0.671)	M_{2N}	Nm	5.9	8.3	10.7	14.6	17.3	15	18.6	26	32.5	33	33	30	–	–	–	–	■■■ + ■■■ + . . .
2.29	7.29		M_{2_0}	Nm	6.7	9	11.3	15.9	18	15	20	27	33	33	33	30	–	–	–	–	
			M_{2max}	Nm	21.5	29	36	40	29	24	53	53	53	53	53	48	–	–	–	–	

➥ Continued on the next page

Planetary gearbox data																	
Gearbox type:		NRK070, 1-stage						NRK070, 2-stage									
1. Order code		B21						B22									
	i	3	4	5	7	8	10	9	12	15	16	20	25	32	40	64	100
2. Order code		R03	R04	R05	R07	R08	R10	R09	R12	R15	R16	R20	R25	R32	R40	R64	R00
$M_{2N,G}$	Nm	28	33	30	25	18	15	33	33	33	33	33	30	33	30	18	15
$M_{2max,G}$	Nm	45	53	48	40	29	24	53	53	53	53	53	48	53	48	29	24
$M_{2Em.Off}$	Nm	66	88	80	80	80	80	88	88	88	88	88	80	88	80	80	80
$J_{1,G}$	kg cm²	0.174	0.117	0.095	0.078	0.074	0.069	0.126	0.121	0.078	0.087	0.076	0.075	0.067	0.066	0.066	0.064
$\varphi_{2,G}$	'	10						12									

Color legend:		
	$M_{max,M} \times i < M_{2N,G}$	**The motor and gearbox combination is fatigue-proof**
	$M_{2N,G} < M_{max,M} \times i < M_{2max,G}$	**Check acceleration and inertias, perform service life calculation if necessary**
	$M_{max,M} \times i > M_{2max,G}$	**The motor can destroy the gearbox, check acceleration and inertias, perform service life calculation if necessary**

© Siemens 2022

SIMOTICS S-1FK2 and S-1FT2 servo planetary geared motors
for servo converters with line connection 230 V 1 AC / 240 V 3 AC

Gearbox type NRK070

Servomotor data $M_{0,M}$ Nm	M_{maxM} Nm	J_M ($J_{M,Br}$) kg cm²	Selection data servomotors with planetary gearbox																	Servomotors with planetary gearbox
SIMOTICS S-1FK2 and S-1FT2 High Dynamic servomotors with planetary gearbox NRK070 1 and 2-stage (continued)																				
2.24 ... 2.27	7.31 ... 7.39	0.581 (0.671)	n_{2N}	rpm	750	600	500	375	375	300	300	250	200	200	150	125	–	–	–	–	**1F.2104-5AK..-2..0-Z**
			M_{2N}	Nm	4.45	6.3	8.1	11.6	12	15	14.4	17.7	23	23	31	30	–	–	–	–	■■■ + ■■■ + . . .
			$M_{2,0}$	Nm	6.7	9	11.3	15.8	18	15	20	27	33	33	33	30	–	–	–	–	
			M_{2max}	Nm	22	29.5	36.5	40	29	24	53	53	53	53	53	48	–	–	–	–	
3.01 ... 3.03	9.63 ... 9.74	0.781 (0.861)	n_{2N}	rpm	500	375	300	250	200	–	200	125	100	–	–	–	–	–	–	–	**1F.2104-6AF..-2..0-Z**
			M_{2N}	Nm	7.2	10.1	12.9	17.6	18	–	22	31.5	33	–	–	–	–	–	–	–	■■■ + ■■■ + . . .
			$M_{2,0}$	Nm	9	12	15.1	21	18	–	27	33	33	–	–	–	–	–	–	–	
			M_{2max}	Nm	29	38.5	48	40	29	–	53	53	53	–	–	–	–	–	–	–	
4.69 ... 4.73	14.4 ... 14.6	1.98 (2.82)	n_{2N}	rpm	500	375	300	250	–	–	200	125	–	–	–	–	–	–	–	–	**1F.2105-4AF..-0..0-Z**
			M_{2N}	Nm	10.8	15.1	19.3	24.5	–	–	30	33	–	–	–	–	–	–	–	–	■■■ + ■■■ + . . .
			$M_{2,0}$	Nm	14.1	18.8	23.5	25	–	–	33	33	–	–	–	–	–	–	–	–	
			M_{2max}	Nm	43.5	53	48	40	–	–	53	53	–	–	–	–	–	–	–	–	
7.29 ... 7.3	23.4 ... 23.4	2.92 (3.77)	n_{2N}	rpm	500	375	300	–	–	–	–	–	–	–	–	–	–	–	–	–	**1F.2105-6AF..-0..0-Z**
			M_{2N}	Nm	14	19.5	25	–	–	–	–	–	–	–	–	–	–	–	–	–	■■■ + ■■■ + . . .
			$M_{2,0}$	Nm	21.5	29	30	–	–	–	–	–	–	–	–	–	–	–	–	–	
			M_{2max}	Nm	45	53	48	–	–	–	–	–	–	–	–	–	–	–	–	–	
SIMOTICS S-1FK2 and S-1FT2 Compact servomotors with planetary gearbox NRK070 1 and 2-stage																				
0.524 ... 0.566	1.72 ... 1.75	0.2 (0.22)	n_{2N}	rpm	750	600	600	500	375	300	375	250	200	200	150	125	100	75	–	–	**1F.2203-2AG..-2..0-Z**
			M_{2N}	Nm	1.04	1.55	1.75	2.35	3.2	4.2	3.1	4.85	6.4	6.5	8.7	10.7	13.8	18	–	–	■■■ + ■■■ + . . .
			$M_{2,0}$	Nm	1.57	2.1	2.7	3.85	4.45	5.6	4.95	6.7	8.4	8.9	11.2	14.1	18	22.5	–	–	
			M_{2max}	Nm	5.1	6.9	8.7	12.2	14	17.5	15.6	20.5	26	27.5	34.5	43.5	53	48	–	–	
1.15 ... 1.18	3.58 ... 3.62	0.35 (0.37)	n_{2N}	rpm	750	600	500	375	375	300	300	250	200	200	150	125	100	75	–	–	**1F.2203-4AG..-2..0-Z**
			M_{2N}	Nm	2.55	3.75	4.9	7.1	7.6	9.9	9	11.5	14.9	15.3	20	24.5	31.5	30	–	–	■■■ + ■■■ + . . .
			$M_{2,0}$	Nm	3.4	4.6	5.8	8.2	9.4	11.8	10.5	14	17.6	18.8	23.5	29	33	30	–	–	
			M_{2max}	Nm	10.7	14.4	18	25	28.5	24	32	43	53	53	53	48	53	48	–	–	
2.22 ... 2.25	6.81 ... 6.88	1.251 (1.331)	n_{2N}	rpm	500	375	300	250	200	150	200	125	100	100	75	60	–	–	–	–	**1F.2204-5AF..-2..0-Z**
			M_{2N}	Nm	5.7	8	10.2	13.8	16.5	15	17.7	24.5	31	32.5	33	30	–	–	–	–	■■■ + ■■■ + . . .
			$M_{2,0}$	Nm	6.6	8.9	11.1	15.6	17.9	15	20	26.5	33	33	33	30	–	–	–	–	
			M_{2max}	Nm	20.5	27.5	34	40	29	24	53	53	53	53	53	48	–	–	–	–	
2.23 ... 2.26	6.81 ... 6.88	1.251 (1.331)	n_{2N}	rpm	600	600	500	375	300	300	300	200	200	150	150	125	–	–	–	–	**1F.2204-5AK..-2..0-Z**
			M_{2N}	Nm	5.2	5.8	7.5	10.7	13.6	13.8	13.2	20	21	27.5	28	30	–	–	–	–	■■■ + ■■■ + . . .
			$M_{2,0}$	Nm	6.6	8.9	11.2	15.7	18	15	20	26.5	33	33	33	30	–	–	–	–	
			M_{2max}	Nm	20.5	27.5	34	40	29	24	53	53	53	53	53	48	–	–	–	–	
2.99 ... 3.02	9.13 ... 9.24	1.631 (1.711)	n_{2N}	rpm	500	375	300	250	200	–	200	125	100	–	75	–	–	–	–	–	**1F.2204-6AF..-2..0-Z**
			M_{2N}	Nm	7.6	10.6	13.6	18.4	18	–	23	33	33	–	33	–	–	–	–	–	■■■ + ■■■ + . . .
			$M_{2,0}$	Nm	8.9	12	15	21	18	–	26.5	33	33	–	33	–	–	–	–	–	
			M_{2max}	Nm	27.5	36.5	46	40	29	–	53	53	53	–	53	–	–	–	–	–	
2.9 ... 2.92	10.4 ... 10.5	3.42 (4.32)	n_{2N}	rpm	500	375	300	250	200	–	200	125	100	100	–	–	–	–	–	–	**1F.2205-2AF..-0..0-Z**
			M_{2N}	Nm	7	9.9	12.6	16.6	18	–	20.5	30	33	33	–	–	–	–	–	–	■■■ + ■■■ + . . .
			$M_{2,0}$	Nm	8.6	11.6	14.5	20	18	–	26	33	33	33	–	–	–	–	–	–	
			M_{2max}	Nm	31	41.5	48	40	29	–	53	53	53	53	–	–	–	–	–	–	

➥ Continued on the next page

Planetary gearbox data																
Gearbox type:			NRK070, 1-stage						NRK070, 2-stage							
1. Order code			B21						B22							
	i		3	4	5	7	8	10	9	12	15	16	20	25	32	40	64	100
2. Order code			R03	R04	R05	R07	R08	R10	R09	R12	R15	R16	R20	R25	R32	R40	R64	R00
	$M_{2N,G}$	Nm	28	33	30	25	18	15	33	33	33	33	33	30	33	30	18	15
	$M_{2max,G}$	Nm	45	53	48	40	29	24	53	53	53	53	53	48	53	48	29	24
	$M_{2Em.Off}$	Nm	66	88	80	80	80	80	88	88	88	88	88	80	88	80	80	80
	$J_{1,G}$	kg cm²	0.174	0.117	0.095	0.078	0.074	0.069	0.126	0.121	0.078	0.087	0.076	0.075	0.067	0.066	0.066	0.064
	$\varphi_{2,G}$	'	10						12									

Color legend:		
	$M_{max,M} \times i < M_{2N,G}$	The motor and gearbox combination is fatigue-proof
	$M_{2N,G} < M_{max,M} \times i < M_{2max,G}$	Check acceleration and inertias, perform service life calculation if necessary
	$M_{max,M} \times i > M_{2max,G}$	The motor can destroy the gearbox, check acceleration and inertias, perform service life calculation if necessary

© Siemens 2022

SIMOTICS S-1FK2 and S-1FT2 Compact servomotors with planetary gearbox NRK070 1 and 2-stage (continued)

Servomotor data			Selection data servomotors with planetary gearbox																Servomotors with planetary gearbox
$M_{0,M}$	M_{maxM}	J_M ($J_{M,Br}$)																	
Nm	Nm	kg cm²																	
4.94 ... 4.98	17.3 ... 17.5	5.37 (6.27)	n_{2N}	rpm	500	375	300	250	–	–	200	–	–	–	–	–	–	–	–	1F.2205-4AF..-0..0-Z
			M_{2N}	Nm	9.3	13.1	16.9	21	–	–	25.5	–	–	–	–	–	–	–	–	■■■ + ■■■ + . . .
			$M_{2,0}$	Nm	14.9	19.9	24.5	25	–	–	33	–	–	–	–	–	–	–	–	
			M_{2max}	Nm	45	53	48	40	–	–	53	–	–	–	–	–	–	–	–	

Planetary gearbox data																	
Gearbox type:			NRK070, 1-stage						NRK070, 2-stage								
1. Order code			B21						B22								
i			3	4	5	7	8	10	9	12	15	16	20	25	32	40	64	100
2. Order code			R03	R04	R05	R07	R08	R10	R09	R12	R15	R16	R20	R25	R32	R40	R64	R00
$M_{2N,G}$		Nm	28	33	30	25	18	15	33	33	33	33	33	30	33	30	18	15
$M_{2max,G}$		Nm	45	53	48	40	29	24	53	53	53	53	53	48	53	48	29	24
$M_{2Em.Off}$		Nm	66	88	80	80	80	80	88	88	88	88	88	80	88	80	80	80
$J_{1,G}$		kg cm²	0.174	0.117	0.095	0.078	0.074	0.069	0.126	0.121	0.078	0.087	0.076	0.075	0.067	0.066	0.066	0.064
$\varphi_{2,G}$		'	10						12									

Color legend:		
	$M_{max,M} \times i < M_{2N,G}$	The motor and gearbox combination is fatigue-proof
	$M_{2N,G} < M_{max,M} \times i < M_{2max,G}$	Check acceleration and inertias, perform service life calculation if necessary
	$M_{max,M} \times i > M_{2max,G}$	The motor can destroy the gearbox, check acceleration and inertias, perform service life calculation if necessary

© Siemens 2022

Gearbox type NRK090

Selection and ordering data

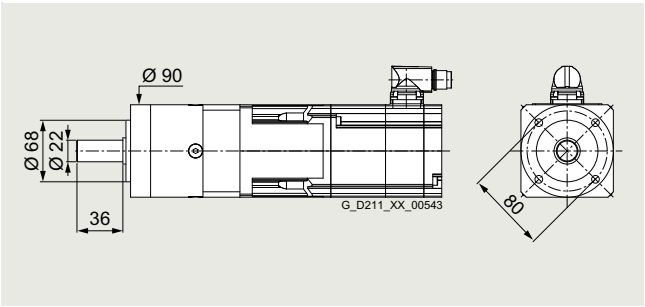

Permissible output shaft loads		
Average radial force for 20000 h	$F_{R,eq}$	1900 N
Average axial force for 20000 h	$F_{A,eq}$	2000 N
Average radial force for 30000 h	$F_{R,eq}$	1700 N
Average axial force for 30000 h	$F_{A,eq}$	1500 N
Maximum radial force	$F_{R,max}$	3100 N
Maximum axial force	$F_{A,max}$	3800 N

3 4

Servomotor data $M_{0,M}$ Nm	M_{maxM} Nm	J_M ($J_{M,Br}$) kg cm²	Selection data servomotors with planetary gearbox																	Servomotors with planetary gearbox
SIMOTICS S-1FK2 and S-1FT2 High Dynamic servomotors with planetary gearbox NRK090 1 and 2-stage																				
0.473	1.77	0.093 (0.112)	n_{2N}	rpm	600	600	600	500	375	300	375	250	200	200	150	125	100	75	50	30	**1F.2103-2AG..-0..0-Z**
...	...		M_{2N}	Nm	0.88	1.13	1.33	1.94	2.7	3.6	2.45	3.95	5.1	5.4	7.4	9.2	12.2	15.9	25	38	■■■ + ■■■ + . . .
0.543	1.82		M_{2_0}	Nm	1.42	1.97	2.5	3.6	4.15	5.2	4.7	6.3	7.9	8.5	10.7	13.4	17.2	21.5	34.5	38	
			M_{2max}	Nm	5.3	7.1	8.9	12.6	14.5	18.1	16.2	21.5	27	28.5	36	45	57	72	80	61	
1.08	3.83	0.139 (0.158)	n_{2N}	rpm	600	500	500	375	300	300	300	200	200	150	150	125	100	75	50	–	**1F.2103-4AG..-0..0-Z**
...	...		M_{2N}	Nm	2.2	3.1	3.45	5.4	6.9	7.4	6.8	10.7	10.8	14.9	16	19.5	25.5	34.5	50	–	■■■ + ■■■ + . . .
1.14	3.87		M_{2_0}	Nm	3.2	4.4	5.5	7.8	9	11.3	10.1	13.5	16.9	18.1	22.5	28	36	45.5	50	–	
			M_{2max}	Nm	11.4	15.3	19.2	27	30.5	38.5	34	45.5	57	61	76	95	122	131	80	–	
1.1	3.54	0.35 (0.43)	n_{2N}	rpm	500	375	300	250	200	150	200	125	100	100	75	60	50	37.5	25	–	**1F.2104-4AF..-2..0-Z**
...	...		M_{2N}	Nm	2.95	4.15	5.3	7.5	8.8	11.2	9.5	13.3	16.7	17.7	22	28	36	45	50	–	■■■ + ■■■ + . . .
1.15	3.58		M_{2_0}	Nm	3.25	4.45	5.6	7.9	9.1	11.4	10.2	13.7	17.1	18.3	22.5	28.5	36.5	46	50	–	
			M_{2max}	Nm	10.6	14.2	17.7	24.5	28.5	35.5	31.5	42.5	53	56	70	88	113	131	80	–	
1.09	3.63	0.35 (0.43)	n_{2N}	rpm	600	600	500	375	375	300	300	250	200	200	150	125	100	75	50	–	**1F.2104-4AK..-2..0-Z**
...	...		M_{2N}	Nm	3.05	3.7	5	7.4	8.1	10.4	9.2	11.9	15.1	15.8	20.5	25.5	33	42.5	50	–	■■■ + ■■■ + . . .
1.15	3.68		M_{2_0}	Nm	3.25	4.4	5.6	7.9	9.1	11.4	10.1	13.6	17	18.2	22.5	28.5	36.5	45.5	50	–	
			M_{2max}	Nm	10.9	14.5	18.2	25.5	29	36.5	32.5	43.5	54	58	72	91	116	131	80	–	
2.2	7.16	0.56 (0.65)	n_{2N}	rpm	500	375	300	250	200	150	200	125	100	100	75	60	50	37.5	–	–	**1F.2104-5AF..-2..0-Z**
...	...		M_{2N}	Nm	6.1	8.5	10.9	15.2	17.7	22	19.1	26	32.5	35	44	55	70	82	–	–	■■■ + ■■■ + . . .
2.25	7.25		M_{2_0}	Nm	6.6	8.8	11.1	15.6	17.9	22	20	26.5	33	35.5	44.5	55	71	82	–	–	
			M_{2max}	Nm	21.5	28.5	36	50	57	61	64	86	107	114	143	131	144	131	–	–	
2.19	7.26	0.56 (0.65)	n_{2N}	rpm	600	500	500	375	300	300	300	200	150	150	150	125	100	75	–	–	**1F.2104-5AK..-2..0-Z**
...	...		M_{2N}	Nm	5.3	7.2	7.8	11.8	15	15.8	14.4	22	29.5	30.5	32	38.5	50	68	–	–	■■■ + ■■■ + . . .
2.23	7.35		M_{2_0}	Nm	6.5	8.8	11	15.5	17.8	22	19.9	26.5	33	35	44	55	71	82	–	–	
			M_{2max}	Nm	21.5	29	36.5	51	58	61	65	87	109	116	144	131	144	131	–	–	
2.95	9.58	0.76 (0.84)	n_{2N}	rpm	500	375	300	250	200	150	200	125	100	100	75	60	50	37.5	–	–	**1F.2104-6AF..-2..0-Z**
...	...		M_{2N}	Nm	7.5	10.7	13.8	18.9	22.5	29	24	34.5	43.5	45.5	58	73	90	82	–	–	■■■ + ■■■ + . . .
3	9.7		M_{2_0}	Nm	8.8	11.8	14.8	20.5	23.5	29.5	26.5	35.5	44.5	47.5	59	74	90	82	–	–	
			M_{2max}	Nm	29	38.5	48	67	77	61	86	115	131	144	144	131	144	131	–	–	

➥ Continued on the next page

Planetary gearbox data																
Gearbox type:		NRK090, 1-stage						NRK090, 2-stage								
1. Order code		B31						B32								
i		3	4	5	7	8	10	9	12	15	16	20	25	32	40	64	100
2. Order code		R03	R04	R05	R07	R08	R10	R09	R12	R15	R16	R20	R25	R32	R40	R64	R00
$M_{2N,G}$	Nm	85	90	82	65	50	38	97	90	82	90	90	82	90	82	50	38
$M_{2max,G}$	Nm	136	144	131	104	80	61	155	144	131	144	144	131	144	131	80	61
$M_{2Em.Off}$	Nm	180	240	220	178	190	200	260	240	220	240	240	220	240	220	190	200
$J_{1,G}$	kg cm²	0.789	0.557	0.476	0.409	0.394	0.374	0.625	0.601	0.592	0.453	0.41	0.406	0.368	0.366	0.367	0.356
$\varphi_{2,G}$	'	7						9									

Color legend:		
	$M_{max,M} \times i < M_{2N,G}$	**The motor and gearbox combination is fatigue-proof**
	$M_{2N,G} < M_{max,M} \times i < M_{2max,G}$	**Check acceleration and inertias, perform service life calculation if necessary**
	$M_{max,M} \times i > M_{2max,G}$	**The motor can destroy the gearbox, check acceleration and inertias, perform service life calculation if necessary**

© Siemens 2022

Servomotor data $M_{0,M}$ Nm	M_{maxM} Nm	J_M ($J_{M,Br}$) kg cm²	Selection data servomotors with planetary gearbox																	Servomotors with planetary gearbox
SIMOTICS S-1FK2 and S-1FT2 High Dynamic servomotors with planetary gearbox NRK090 1 and 2-stage (continued)																				
4.67 ... 4.72	14.4 ... 14.6	1.71 (2.55)	n_{2N}	rpm	500	375	300	250	200	150	200	125	100	100	75	60	50	–	–	–	**1F.2105-4AF..-0..0-Z**
			M_{2N}	Nm	12.3	16.8	21	29	34	38	36	50	63	66	84	82	90	–	–	–	■■■ + ■■■ + . . .
			$M_{2,0}$	Nm	14	18.7	23.5	33	37.5	38	42	56	70	74	90	82	90	–	–	–	
			M_{2max}	Nm	43.5	58	72	102	80	61	130	144	131	144	144	131	144	–	–	–	
7.41 ... 7.51	23.1 ... 23.4	2.65 (3.5)	n_{2N}	rpm	500	375	300	250	200	–	200	125	100	100	75	–	–	–	–	–	**1F.2105-6AF..-0..0-Z**
			M_{2N}	Nm	16.5	23	29.5	38.5	47.5	–	46	71	82	89	90	–	–	–	–	–	■■■ + ■■■ + . . .
			$M_{2,0}$	Nm	22	29.5	37.5	52	50	–	66	89	82	90	90	–	–	–	–	–	
			M_{2max}	Nm	70	93	116	104	80	–	155	144	131	144	144	–	–	–	–	–	
7.48 ... 7.58	23.4 ... 23.8	5.472 (7.172)	n_{2N}	rpm	375	375	300	200	200	–	150	125	100	100	75	–	–	–	–	–	**1F.2106-3AF..-0..0-Z**
			M_{2N}	Nm	18.6	19.9	25.5	40	40.5	–	51	62	78	77	90	–	–	–	–	–	■■■ + ■■■ + . . .
			$M_{2,0}$	Nm	22.5	30	37.5	53	50	–	67	90	82	90	90	–	–	–	–	–	
			M_{2max}	Nm	71	95	118	104	80	–	155	144	131	144	144	–	–	–	–	–	
9.7 ... 9.82	31.2 ... 31.6	6.872 (8.472)	n_{2N}	rpm	375	300	250	200	200	–	150	125	–	–	–	–	–	–	–	–	**1F.2106-4AF..-0..0-Z**
			M_{2N}	Nm	23	30	36.5	48	47	–	61	71	–	–	–	–	–	–	–	–	■■■ + ■■■ + . . .
			$M_{2,0}$	Nm	29	39	49	65	50	–	87	90	–	–	–	–	–	–	–	–	
			M_{2max}	Nm	94	126	131	104	79	–	155	144	–	–	–	–	–	–	–	–	
SIMOTICS S-1FK2 and S-1FT2 Compact servomotors with planetary gearbox NRK090 1 and 2-stage																				
0.467 ... 0.537	1.67 ... 1.72	0.2 (0.22)	n_{2N}	rpm	600	500	500	375	375	300	300	250	200	200	150	125	100	75	50	30	**1F.2203-2AG..-0..0-Z**
			M_{2N}	Nm	0.96	1.42	1.65	2.6	2.7	3.65	3.15	3.95	5.1	5.3	7.6	9.3	12.4	16.5	25.5	38	■■■ + ■■■ + . . .
			$M_{2,0}$	Nm	1.4	1.94	2.45	3.55	4.1	5.2	4.6	6.2	7.8	8.4	10.5	13.2	17	21	34	38	
			M_{2max}	Nm	4.95	6.7	8.4	11.9	13.6	17.1	15.2	20	25.5	27	34	42.5	54	68	80	61	
1.09 ... 1.15	3.54 ... 3.58	0.35 (0.37)	n_{2N}	rpm	600	600	500	375	375	300	300	250	200	200	150	125	100	75	50	–	**1F.2203-4AG..-0..0-Z**
			M_{2N}	Nm	2.9	3.35	4.65	6.9	7.3	9.7	8.6	10.9	14	14.4	19.4	23.5	31	40	50	–	■■■ + ■■■ + . . .
			$M_{2,0}$	Nm	3.25	4.4	5.6	7.9	9.1	11.4	10.1	13.6	17.1	18.2	22.5	28.5	36.5	45.5	50	–	
			M_{2max}	Nm	10.6	14.2	17.8	25	28.5	35.5	31.5	42.5	53	56	70	88	113	131	80	–	
2.16 ... 2.21	6.76 ... 6.84	1.23 (1.31)	n_{2N}	rpm	500	375	300	250	200	150	200	125	100	100	75	60	50	37.5	–	–	**1F.2204-5AF..-2..0-Z**
			M_{2N}	Nm	5.9	8.1	10.4	14.4	16.8	21.5	18.1	25	31.5	33	42	52	67	82	–	–	■■■ + ■■■ + . . .
			$M_{2,0}$	Nm	6.4	8.7	10.9	15.4	17.6	22	19.6	26	32.5	35	43.5	54	70	82	–	–	
			M_{2max}	Nm	20	27	34	47.5	54	61	61	81	101	108	135	131	144	131	–	–	
2.17 ... 2.22	6.76 ... 6.84	1.23 (1.31)	n_{2N}	rpm	600	500	375	300	300	250	250	200	150	150	125	100	75	75	–	–	**1F.2204-5AK..-2..0-Z**
			M_{2N}	Nm	5.2	7	9.9	13.7	14.4	18	16.8	21.5	28.5	29.5	36.5	46	62	62	–	–	■■■ + ■■■ + . . .
			$M_{2,0}$	Nm	6.5	8.7	10.9	15.4	17.7	22	19.7	26	33	35	44	55	70	82	–	–	
			M_{2max}	Nm	20	27	34	47.5	54	61	61	81	101	108	135	131	144	131	–	–	
2.94 ... 2.98	9.08 ... 9.2	1.61 (1.69)	n_{2N}	rpm	500	375	300	250	200	150	200	125	100	100	75	60	50	37.5	–	–	**1F.2204-6AF..-2..0-Z**
			M_{2N}	Nm	8	11.4	14.5	20	23	29	25	34.5	43.5	46.5	58	72	90	82	–	–	■■■ + ■■■ + . . .
			$M_{2,0}$	Nm	8.8	11.8	14.8	20.5	23.5	29.5	26.5	35	44	47	59	73	90	82	–	–	
			M_{2max}	Nm	27.5	36.5	45.5	64	73	61	82	109	131	144	144	131	144	131	–	–	
2.98 ... 3.02	10.3 ... 10.5	3.15 (4.05)	n_{2N}	rpm	500	375	300	250	200	150	200	125	100	100	75	60	50	37.5	–	–	**1F.2205-2AF..-0..0-Z**
			M_{2N}	Nm	7.6	10.4	13.2	18.3	21	27	22.5	31.5	39.5	42	53	66	84	82	–	–	■■■ + ■■■ + . . .
			$M_{2,0}$	Nm	8.9	11.9	15	21	24	30	26.5	35.5	44.5	47.5	59	74	90	82	–	–	
			M_{2max}	Nm	31	41.5	52	73	80	61	93	124	131	144	144	131	144	131	–	–	

➥ Continued on the next page

Planetary gearbox data																	
Gearbox type:			**NRK090, 1-stage**						**NRK090, 2-stage**								
1. Order code			**B31**						**B32**								
	i		**3**	**4**	**5**	**7**	**8**	**10**	**9**	**12**	**15**	**16**	**20**	**25**	**32**	**40**	**64**	**100**
2. Order code			**R03**	**R04**	**R05**	**R07**	**R08**	**R10**	**R09**	**R12**	**R15**	**R16**	**R20**	**R25**	**R32**	**R40**	**R64**	**R00**
	$M_{2N,G}$	Nm	85	90	82	65	50	38	97	90	82	90	90	82	90	82	50	38
	$M_{2max,G}$	Nm	136	144	131	104	80	61	155	144	131	144	144	131	144	131	80	61
	$M_{2Em.Off}$	Nm	180	240	220	178	190	200	260	240	220	240	240	220	240	220	190	200
	$J_{1,G}$	kg cm²	0.789	0.557	0.476	0.409	0.394	0.374	0.625	0.601	0.592	0.453	0.41	0.406	0.368	0.366	0.367	0.356
	$\varphi_{2,G}$	'	7						9									

Color legend:

	$M_{max,M} \times i < M_{2N,G}$	The motor and gearbox combination is fatigue-proof
	$M_{2N,G} < M_{max,M} \times i < M_{2max,G}$	Check acceleration and inertias, perform service life calculation if necessary
	$M_{max,M} \times i > M_{2max,G}$	The motor can destroy the gearbox, check acceleration and inertias, perform service life calculation if necessary

© Siemens 2022

Gearbox type NRK090

SIMOTICS S-1FK2 and S-1FT2 Compact servomotors with planetary gearbox NRK090 1 and 2-stage (continued)

Servomotor data $M_{0,M}$ Nm	M_{maxM} Nm	J_M ($J_{M,Br}$) kg cm²			1-stage i=3	1-stage i=4	1-stage i=5	1-stage i=7	1-stage i=8	1-stage i=10	2-stage i=9	2-stage i=12	2-stage i=15	2-stage i=16	2-stage i=20	2-stage i=25	2-stage i=32	2-stage i=40	2-stage i=64	2-stage i=100	Servomotors with planetary gearbox
					B31						**B32**										
					R03	**R04**	**R05**	**R07**	**R08**	**R10**	**R09**	**R12**	**R15**	**R16**	**R20**	**R25**	**R32**	**R40**	**R64**	**R00**	
5.06 ... 5.13	17.3 ... 17.5	5.1 (6)	n_{2N}	rpm	500	375	300	250	200	150	200	125	100	100	75	60	–	–	–	–	**1F.2205-4AF..-0..0-Z**
			M_{2N}	Nm	11.1	15.7	20	26.5	32.5	38	33	50	63	65	84	82	–	–	–	–	■■■ + ■■■ + . . .
			$M_{2,0}$	Nm	15.2	20	25.5	35.5	41	38	45.5	60	76	81	90	82	–	–	–	–	
			M_{2max}	Nm	52	69	87	104	80	61	155	144	131	144	144	131	–	–	–	–	
5.2 ... 5.26	17.2 ... 17.4	8.672 (10.272)	n_{2N}	rpm	500	375	300	200	200	–	200	125	100	100	75	–	–	–	–	–	**1F.2206-2AF..-0..0-Z**
			M_{2N}	Nm	10.6	15.3	20	30.5	31.5	–	29	49.5	62	62	84	–	–	–	–	–	■■■ + ■■■ + . . .
			$M_{2,0}$	Nm	15.6	20.5	26	36.5	42	–	46.5	62	78	83	90	–	–	–	–	–	
			M_{2max}	Nm	52	69	87	104	80	–	155	144	131	144	144	–	–	–	–	–	
10.2 ... 10.3	34.7 ... 35.2	15.972 (17.672)	n_{2N}	rpm	375	300	250	200	200	–	150	125	–	–	–	–	–	–	–	–	**1F.2206-4AF..-0..0-Z**
			M_{2N}	Nm	23.5	30.5	37.5	49	48.5	–	62	73	–	–	–	–	–	–	–	–	■■■ + ■■■ + . . .
			$M_{2,0}$	Nm	30.5	41	51	65	50	–	91	90	–	–	–	–	–	–	–	–	
			M_{2max}	Nm	105	140	131	104	79	–	155	144	–	–	–	–	–	–	–	–	
Planetary gearbox data																					
Gearbox type:					**NRK090, 1-stage**						**NRK090, 2-stage**										
1. Order code					**B31**						**B32**										
i					**3**	**4**	**5**	**7**	**8**	**10**	**9**	**12**	**15**	**16**	**20**	**25**	**32**	**40**	**64**	**100**	
2. Order code					**R03**	**R04**	**R05**	**R07**	**R08**	**R10**	**R09**	**R12**	**R15**	**R16**	**R20**	**R25**	**R32**	**R40**	**R64**	**R00**	
	$M_{2N,G}$	Nm			85	90	82	65	50	38	97	90	82	90	90	82	90	82	50	38	
	$M_{2max,G}$	Nm			136	144	131	104	80	61	155	144	131	144	144	131	144	131	80	61	
	$M_{2Em.Off}$	Nm			180	240	220	178	190	200	260	240	220	240	240	220	240	220	190	200	
	$J_{1,G}$	kg cm²			0.789	0.557	0.476	0.409	0.394	0.374	0.625	0.601	0.592	0.453	0.41	0.406	0.368	0.366	0.367	0.356	
	$\varphi_{2,G}$	'			7						9										

Color legend:

	$M_{max,M} \times i < M_{2N,G}$	The motor and gearbox combination is fatigue-proof
	$M_{2N,G} < M_{max,M} \times i < M_{2max,G}$	Check acceleration and inertias, perform service life calculation if necessary
	$M_{max,M} \times i > M_{2max,G}$	The motor can destroy the gearbox, check acceleration and inertias, perform service life calculation if necessary

© Siemens 2022

Selection and ordering data

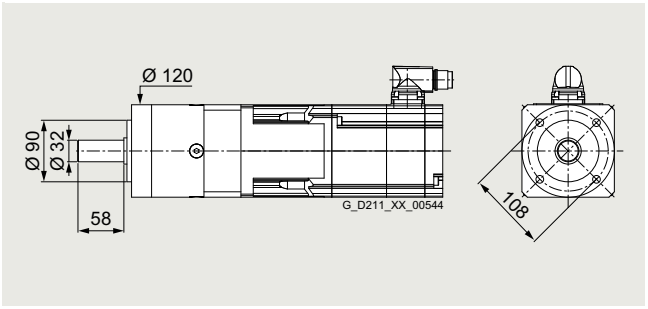

Permissible output shaft loads		
Average radial force for 20000 h	$F_{R,eq}$	2500 N
Average axial force for 20000 h	$F_{A,eq}$	4000 N
Average radial force for 30000 h	$F_{R,eq}$	2150 N
Average axial force for 30000 h	$F_{A,eq}$	3000 N
Maximum radial force	$F_{R,max}$	4000 N
Maximum axial force	$F_{A,max}$	5900 N

Servomotor data			Selection data servomotors with planetary gearbox																	Servomotors with planetary gearbox
$M_{0,M}$	M_{maxM}	J_M ($J_{M,Br}$)																		
Nm	Nm	kg cm²																		
SIMOTICS S-1FK2 and S-1FT2 High Dynamic servomotors with planetary gearbox NRK120 1 and 2-stage																				
0.346	1.64	0.093	n_{2N}	rpm	300	300	300	300	250	250	200	150	125	125	125	100	75	75	50	30	**1F.2103-2AG..-0..0-Z**
...	...	(0.112)	M_{2N}	Nm	0.7	0.99	1.3	1.71	2.25	2.5	2.35	3.45	4.4	4.6	5.2	6.8	10.2	10.5	16	28.5	■■■ + ■■■ + . . .
0.477	1.74		M_{2_0}	Nm	1.03	1.52	2	2.95	3.45	4.45	3.9	5.3	6.8	7.3	9.2	11.6	15	18.8	30	47.5	
			M_{2max}	Nm	4.9	6.6	8.4	12	13.7	17.3	15.4	20.5	25.5	27.5	34.5	43	55	69	111	152	
0.955	3.7	0.139	n_{2N}	rpm	375	375	300	250	250	200	200	150	125	125	100	100	75	60	37.5	25	**1F.2103-4AG..-0..0-Z**
...	...	(0.158)	M_{2N}	Nm	2.45	2.95	4.3	6.1	6.4	8.7	7.7	10.8	13.5	13.8	18.7	18.5	27.5	35	57	87	■■■ + ■■■ + . . .
1.07	3.78		M_{2_0}	Nm	2.85	3.95	5	7.2	8.3	10.5	9.3	12.5	15.8	16.8	21	26.5	34	42.5	68	95	
			M_{2max}	Nm	11	14.9	18.7	26	30	37.5	33.5	45	56	60	75	93	120	150	192	152	
0.969	3.41	0.35	n_{2N}	rpm	500	375	300	250	200	150	200	125	100	100	75	60	50	37.5	25	15	**1F.2104-4AF..-0..0-Z**
...	...	(0.43)	M_{2N}	Nm	2.25	3.45	4.65	6.7	7.9	10.1	8.2	11.7	14.8	15.8	20	25	32.5	41	66	95	■■■ + ■■■ + . . .
1.09	3.5		M_{2_0}	Nm	2.9	4	5.1	7.3	8.4	10.6	9.4	12.7	16	17.1	21	26.5	34.5	43	69	95	
			M_{2max}	Nm	10.2	13.7	17.2	24	27.5	34.5	31	41.5	52	55	69	86	111	138	192	152	
0.963	3.51	0.35	n_{2N}	rpm	500	500	375	300	300	250	250	200	150	150	125	100	100	75	50	30	**1F.2104-4AK..-0..0-Z**
...	...	(0.43)	M_{2N}	Nm	2.45	2.65	4.55	6.7	7.4	9.7	8.1	10.5	14.2	15	19.4	24.5	25	37	53	95	■■■ + ■■■ + . . .
1.08	3.59		M_{2_0}	Nm	2.85	3.95	5	7.2	8.3	10.6	9.4	12.6	15.9	17	21	26.5	34	43	69	95	
			M_{2max}	Nm	10.5	14.1	17.7	25	28.5	35.5	32	42.5	53	57	71	89	114	142	192	152	
2.07	7.09	0.56	n_{2N}	rpm	500	375	300	250	200	150	200	125	100	100	75	60	50	37.5	25	–	**1F.2104-5AF..-0..0-Z**
...	...	(0.65)	M_{2N}	Nm	4.9	7.6	10.1	14.4	16.7	21	18.1	24.5	31	33	41.5	52	67	84	120	–	■■■ + ■■■ + . . .
2.17	7.17		M_{2_0}	Nm	6.2	8.4	10.6	15	17.2	21.5	19.2	25.5	32	34.5	43	54	69	86	120	–	
			M_{2max}	Nm	21	28	35.5	50	57	71	63	85	106	113	141	177	225	275	192	–	
2.06	7.18	0.56	n_{2N}	rpm	500	375	375	300	250	200	200	150	125	125	100	100	75	60	37.5	–	**1F.2104-5AK..-0..0-Z**
...	...	(0.65)	M_{2N}	Nm	4.8	7.5	8.3	12	15.1	19.8	17.7	24	30	30.5	40.5	40.5	59	74	119	–	■■■ + ■■■ + . . .
2.15	7.27		M_{2_0}	Nm	6.1	8.3	10.5	14.9	17.1	21	19.1	25.5	32	34	42.5	53	68	85	120	–	
			M_{2max}	Nm	21.5	28.5	36	50	58	72	64	86	107	115	143	179	230	275	192	–	
2.82	9.5	0.76	n_{2N}	rpm	500	375	300	250	200	150	200	125	100	100	75	60	50	37.5	25	–	**1F.2104-6AF..-0..0-Z**
...	...	(0.84)	M_{2N}	Nm	6.2	9.5	12.9	17.7	21.5	28.5	22	33.5	42	44.5	56	70	91	113	120	–	■■■ + ■■■ + . . .
2.92	9.62		M_{2_0}	Nm	8.4	11.4	14.3	20	23	29	25.5	34.5	43	46	57	72	92	116	120	–	
			M_{2max}	Nm	28.5	38	47.5	67	76	96	85	114	142	152	190	235	300	275	192	–	

➥ Continued on the next page

Planetary gearbox data																
Gearbox type:			NRK120, 1-stage						NRK120, 2-stage							
1. Order code			B41						B42							
	i		3	4	5	7	8	10	9	12	15	16	20	25	32	40	64	100
2. Order code			R03	R04	R05	R07	R08	R10	R09	R12	R15	R16	R20	R25	R32	R40	R64	R00
	$M_{2N,G}$	Nm	115	155	172	135	120	95	157	195	172	195	195	172	195	172	120	95
	$M_{2max,G}$	Nm	184	248	275	216	192	152	251	312	275	312	312	275	312	275	192	152
	$M_{2Em.Off}$	Nm	390	520	500	340	380	480	500	520	500	520	520	500	520	500	380	480
	$J_{1,G}$	kg cm²	2.76	2.05	1.77	1.55	1.5	1.42	2.33	2.25	2.22	1.76	1.58	1.57	1.42	1.42	1.42	1.38
	$\varphi_{2,G}$	'	7						9									

Color legend:		
	$M_{max,M} \times i < M_{2N,G}$	**The motor and gearbox combination is fatigue-proof**
	$M_{2N,G} < M_{max,M} \times i < M_{2max,G}$	**Check acceleration and inertias, perform service life calculation if necessary**
	$M_{max,M} \times i > M_{2max,G}$	**The motor can destroy the gearbox, check acceleration and inertias, perform service life calculation if necessary**

© Siemens 2022

SIMOTICS S-1FK2 and S-1FT2 servo planetary geared motors

for servo converters with line connection 230 V 1 AC / 240 V 3 AC

Gearbox type NRK120

Servomotor data $M_{0,M}$ Nm	M_{maxM} Nm	J_M ($J_{M,Br}$) kg cm²	Selection data servomotors with planetary gearbox																	Servomotors with planetary gearbox
SIMOTICS S-1FK2 and S-1FT2 High Dynamic servomotors with planetary gearbox NRK120 1 and 2-stage (continued)																				
4.56 ... 4.64	14.3 ... 14.5	1.71 (2.55)	n_{2N}	rpm	500	375	300	250	200	150	200	125	100	100	75	60	50	37.5	–	–	**1F.2105-4AF..-0..0-Z**
			M_{2N}	Nm	10.5	15.8	20.5	28	33.5	43.5	34.5	50	63	66	85	106	135	171	–	–	■■■ + ■■■ + . . .
			$M_{2,0}$	Nm	13.6	18.3	23	32	37	46	41	55	69	73	92	115	147	172	–	–	
			M_{2max}	Nm	43	57	72	101	115	144	129	172	215	225	285	275	312	275	–	–	
7.52 ... 7.6	23 ... 23.3	2.65 (3.5)	n_{2N}	rpm	375	375	300	250	200	150	200	125	100	100	75	60	50	37.5	–	–	**1F.2105-6AF..-0..0-Z**
			M_{2N}	Nm	18.8	21	28	36.5	46.5	62	43	71	89	90	121	152	190	172	–	–	■■■ + ■■■ + . . .
			$M_{2,0}$	Nm	22.5	30	37.5	53	60	76	67	90	112	120	150	172	195	172	–	–	
			M_{2max}	Nm	69	93	116	163	186	152	205	275	275	312	312	275	312	275	–	–	
7.77 ... 7.88	23.4 ... 23.7	4.6 (6.3)	n_{2N}	rpm	500	375	300	250	200	150	200	125	100	100	75	60	50	–	–	–	**1F.2106-3AF..-0..0-Z**
			M_{2N}	Nm	14.8	22	29.5	38	48.5	65	45	73	93	94	126	157	194	–	–	–	■■■ + ■■■ + . . .
			$M_{2,0}$	Nm	23	31	39	55	62	78	70	93	116	124	155	172	195	–	–	–	
			M_{2max}	Nm	71	94	118	165	189	152	210	280	275	312	312	275	312	–	–	–	
10.1 ... 10.2	31.1 ... 31.6	6 (7.6)	n_{2N}	rpm	375	375	300	200	200	150	150	125	100	100	75	60	50	–	–	–	**1F.2106-4AF..-0..0-Z**
			M_{2N}	Nm	24.5	26	35.5	56	58	79	71	87	109	109	148	172	195	–	–	–	■■■ + ■■■ + . . .
			$M_{2,0}$	Nm	30.5	40.5	50	71	81	95	90	121	151	161	195	172	195	–	–	–	
			M_{2max}	Nm	94	126	157	216	192	152	251	312	275	312	312	275	310	–	–	–	
14.3 ... 14.5	40.3 ... 40.9	8.7 (10.4)	n_{2N}	rpm	375	300	300	200	200	150	150	125	100	100	75	–	–	–	–	–	**1F.2106-6AF..-0..0-Z**
			M_{2N}	Nm	32	43	45	72	73	95	89	106	134	132	181	–	–	–	–	–	■■■ + ■■■ + . . .
			$M_{2,0}$	Nm	43	57	72	101	116	95	128	171	172	195	195	–	–	–	–	–	
			M_{2max}	Nm	122	163	200	216	192	152	251	312	275	312	312	–	–	–	–	–	
SIMOTICS S-1FK2 and S-1FT2 Compact servomotors with planetary gearbox NRK120 1 and 2-stage																				
0.34 ... 0.471	1.54 ... 1.64	0.2 (0.22)	n_{2N}	rpm	375	375	300	250	250	200	200	150	125	125	100	100	75	60	37.5	25	**1F.2203-2AG..-0..0-Z**
			M_{2N}	Nm	0.69	0.92	1.51	2.3	2.45	3.4	2.7	3.9	4.95	5.1	7.2	7.2	11.1	14.1	23	35.5	■■■ + ■■■ + . . .
			$M_{2,0}$	Nm	1.01	1.5	1.98	2.9	3.4	4.35	3.85	5.3	6.7	7.2	9.1	11.4	14.8	18.5	29.5	47	
			M_{2max}	Nm	4.6	6.2	7.9	11.3	12.9	16.3	14.5	19.4	24	26	32.5	40.5	52	65	105	152	
0.963 ... 1.08	3.41 ... 3.5	0.35 (0.37)	n_{2N}	rpm	500	375	375	300	300	250	250	200	150	150	125	100	75	75	37.5	30	**1F.2203-4AG..-0..0-Z**
			M_{2N}	Nm	2.45	3.55	4.5	6.6	6.7	8.9	7.5	9.5	13.7	14.2	18.4	23	31.5	33.5	64	90	■■■ + ■■■ + . . .
			$M_{2,0}$	Nm	2.85	3.95	5	7.2	8.4	10.6	9.4	12.6	15.9	17	21	26.5	34	43	69	95	
			M_{2max}	Nm	10.2	13.7	17.2	24	27.5	34.5	31	41.5	52	55	69	86	111	139	192	152	
2.03 ... 2.13	6.69 ... 6.76	1.23 (1.31)	n_{2N}	rpm	500	375	300	250	200	150	200	125	100	100	75	60	50	37.5	25	–	**1F.2204-5AF..-0..0-Z**
			M_{2N}	Nm	4.65	7.3	9.9	13.7	16.3	20.5	17.1	24	30	32	40.5	51	65	82	120	–	■■■ + ■■■ + . . .
			$M_{2,0}$	Nm	6	8.2	10.4	14.7	16.9	21	18.9	25	31.5	33.5	42	53	67	84	120	–	
			M_{2max}	Nm	20	26.5	33.5	47	54	67	60	80	100	107	133	167	210	265	192	–	
2.05 ... 2.14	6.69 ... 6.76	1.23 (1.31)	n_{2N}	rpm	500	375	375	250	250	200	200	150	125	125	100	100	75	60	37.5	–	**1F.2204-5AK..-0..0-Z**
			M_{2N}	Nm	4.8	7.5	8.1	14	14.8	19.4	17.6	24	29.5	30	40	38	57	71	116	–	■■■ + ■■■ + . . .
			$M_{2,0}$	Nm	6.1	8.3	10.4	14.8	17	21	19	25	31.5	34	42.5	53	68	85	120	–	
			M_{2max}	Nm	20	26.5	33.5	47	54	67	60	80	100	107	133	167	210	265	192	–	
2.81 ... 2.9	9 ... 9.11	1.61 (1.69)	n_{2N}	rpm	500	375	300	250	200	150	200	125	100	100	75	60	50	37.5	25	–	**1F.2204-6AF..-0..0-Z**
			M_{2N}	Nm	6.5	10.1	13.7	18.8	22	28	23	33	41.5	44.5	56	70	90	112	120	–	■■■ + ■■■ + . . .
			$M_{2,0}$	Nm	8.4	11.3	14.3	20	23	29	25.5	34.5	43	46	57	72	92	115	120	–	
			M_{2max}	Nm	27	36	45	63	72	91	81	108	135	144	180	225	285	275	192	–	

➥ Continued on the next page

Planetary gearbox data																
Gearbox type:			NRK120, 1-stage						NRK120, 2-stage							
1. Order code			B41						B42							
	i		3	4	5	7	8	10	9	12	15	16	20	25	32	40	64	100
2. Order code			R03	R04	R05	R07	R08	R10	R09	R12	R15	R16	R20	R25	R32	R40	R64	R00
	$M_{2N,G}$	Nm	115	155	172	135	120	95	157	195	172	195	195	172	195	172	120	95
	$M_{2max,G}$	Nm	184	248	275	216	192	152	251	312	275	312	312	275	312	275	192	152
	$M_{2Em.Off}$	Nm	390	520	500	340	380	480	500	520	500	520	520	500	520	500	380	480
	$J_{1,G}$	kg cm²	2.76	2.05	1.77	1.55	1.5	1.42	2.33	2.25	2.22	1.76	1.58	1.57	1.42	1.42	1.42	1.38
	$\varphi_{2,G}$	'	7						9									

Color legend:		
	$M_{max,M} \times i < M_{2N,G}$	The motor and gearbox combination is fatigue-proof
	$M_{2N,G} < M_{max,M} \times i < M_{2max,G}$	Check acceleration and inertias, perform service life calculation if necessary
	$M_{max,M} \times i > M_{2max,G}$	The motor can destroy the gearbox, check acceleration and inertias, perform service life calculation if necessary

© Siemens 2022

Servomotor data			Selection data servomotors with planetary gearbox																	Servomotors with planetary gearbox
$M_{0,M}$	M_{maxM}	J_M ($J_{M,Br}$)																		
Nm	Nm	kg cm²																		
SIMOTICS S-1FK2 and S-1FT2 Compact servomotors with planetary gearbox NRK120 1 and 2-stage (continued)																				
3.02	10.2	3.15	n_{2N}	rpm	500	375	300	250	200	150	200	125	100	100	75	60	50	37.5	25	–	**1F.2205-2AF..-0..0-Z**
...	...	(4.05)	M_{2N}	Nm	6.5	9.8	12.6	17.7	20.5	26.5	22	31	39	41	52	66	84	107	120	–	■■■ + ■■■ + . . .
3.11	10.4		$M_{2,0}$	Nm	9	12.1	15.3	21.5	24.5	31	27.5	36.5	46	49	61	76	98	123	120	–	
			M_{2max}	Nm	30.5	41	51	72	82	103	92	123	154	164	205	255	312	275	192	–	
5.21	17.2	5.1	n_{2N}	rpm	375	375	300	250	200	150	200	125	100	100	75	60	50	37.5	–	–	**1F.2205-4AF..-0..0-Z**
...	...	(6)	M_{2N}	Nm	12.5	14	19.1	25	31.5	43	30	49.5	62	64	86	108	135	172	–	–	■■■ + ■■■ + . . .
5.29	17.4		$M_{2,0}$	Nm	15.6	20.5	26	36.5	42	52	46.5	62	78	83	104	130	167	172	–	–	
			M_{2max}	Nm	52	69	86	121	139	152	155	205	255	275	312	275	312	275	–	–	
5.38	17.2	7.8	n_{2N}	rpm	500	375	300	250	200	150	200	125	100	100	75	60	50	–	–	–	**1F.2206-2AF..-0..0-Z**
...	...	(9.4)	M_{2N}	Nm	11.2	16.8	22	29.5	35.5	45.5	35.5	53	66	69	89	111	141	–	–	–	■■■ + ■■■ + . . .
5.46	17.4		$M_{2,0}$	Nm	16.1	21.5	27	38	43.5	54	48.5	64	80	86	107	134	172	–	–	–	
			M_{2max}	Nm	52	69	86	121	139	152	155	205	255	275	312	275	312	–	–	–	
10.5	34.6	15.1	n_{2N}	rpm	375	375	300	200	200	150	150	125	100	100	75	60	50	–	–	–	**1F.2206-4AF..-0..0-Z**
...	...	(16.8)	M_{2N}	Nm	25	27	36	57	59	80	73	88	111	111	151	172	195	–	–	–	■■■ + ■■■ + . . .
10.7	35.1		$M_{2,0}$	Nm	31.5	42.5	53	74	85	95	95	126	158	168	195	172	195	–	–	–	
			M_{2max}	Nm	105	140	175	216	192	152	251	312	275	312	312	275	310	–	–	–	
15.1	49	31.96	n_{2N}	rpm	375	250	200	150	125	100	100	100	75	75	50	–	–	–	–	–	**1F.2208-3AC..-0..0-Z**
...	...	(35.36)	M_{2N}	Nm	28	44	57	79	94	95	110	115	154	153	195	–	–	–	–	–	■■■ + ■■■ + . . .
15.4	49.7		$M_{2,0}$	Nm	45.5	61	76	107	120	95	136	181	172	195	195	–	–	–	–	–	
			M_{2max}	Nm	149	198	245	216	192	152	251	312	275	312	312	–	–	–	–	–	
18.8	63.6	41.16	n_{2N}	rpm	300	250	200	150	125	–	100	75	75	75	–	–	–	–	–	–	**1F.2208-4AC..-0..0-Z**
...	...	(46.76)	M_{2N}	Nm	40.5	51	65	90	108	–	126	167	168	165	–	–	–	–	–	–	■■■ + ■■■ + . . .
19.1	64.5		$M_{2,0}$	Nm	57	76	95	134	120	–	157	195	172	195	–	–	–	–	–	–	
			M_{2max}	Nm	184	248	275	216	192	–	251	312	270	310	–	–	–	–	–	–	
22.6	77.2	50.46	n_{2N}	rpm	300	250	200	150	125	–	100	75	–	–	–	–	–	–	–	–	**1F.2208-5AC..-0..0-Z**
...	...	(55.96)	M_{2N}	Nm	45	55	71	98	118	–	138	183	–	–	–	–	–	–	–	–	■■■ + ■■■ + . . .
22.9	78.2		$M_{2,0}$	Nm	68	91	114	135	120	–	157	195	–	–	–	–	–	–	–	–	
			M_{2max}	Nm	184	248	275	216	192	–	251	310	–	–	–	–	–	–	–	–	

Planetary gearbox data																		
Gearbox type:			**NRK120, 1-stage**						**NRK120, 2-stage**									
1. Order code			**B41**						**B42**									
i			**3**	**4**	**5**	**7**	**8**	**10**	**9**	**12**	**15**	**16**	**20**	**25**	**32**	**40**	**64**	**100**
2. Order code			**R03**	**R04**	**R05**	**R07**	**R08**	**R10**	**R09**	**R12**	**R15**	**R16**	**R20**	**R25**	**R32**	**R40**	**R64**	**R00**
$M_{2N,G}$		Nm	115	155	172	135	120	95	157	195	172	195	195	172	195	172	120	95
$M_{2max,G}$		Nm	184	248	275	216	192	152	251	312	275	312	312	275	312	275	192	152
$M_{2Em.Off}$		Nm	390	520	500	340	380	480	500	520	500	520	520	500	520	500	380	480
$J_{1,G}$		kg cm²	2.76	2.05	1.77	1.55	1.5	1.42	2.33	2.25	2.22	1.76	1.58	1.57	1.42	1.42	1.42	1.38
$\varphi_{2,G}$		'	7						9									

Color legend:		
	$M_{max,M} \times i < M_{2N,G}$	**The motor and gearbox combination is fatigue-proof**
	$M_{2N,G} < M_{max,M} \times i < M_{2max,G}$	**Check acceleration and inertias, perform service life calculation if necessary**
	$M_{max,M} \times i > M_{2max,G}$	**The motor can destroy the gearbox, check acceleration and inertias, perform service life calculation if necessary**

© Siemens 2022

SIMOTICS S-1FK2 and S-1FT2 servo planetary geared motors
for servo converters with line connection 230 V 1 AC / 240 V 3 AC

Gearbox type NRK155

Selection and ordering data

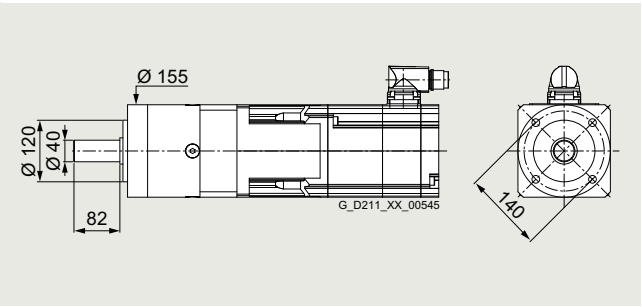

Permissible output shaft loads		
Average radial force for 20000 h	$F_{R,eq}$	5200 N
Average axial force for 20000 h	$F_{A,eq}$	7000 N
Average radial force for 30000 h	$F_{R,eq}$	4600 N
Average axial force for 30000 h	$F_{A,eq}$	6000 N
Maximum radial force	$F_{R,max}$	8400 N
Maximum axial force	$F_{A,max}$	11000 N

3 4

Servomotor data $M_{0,M}$ Nm	M_{maxM} Nm	J_M ($J_{M,Br}$) kg cm²	Selection data servomotors with planetary gearbox										Servomotors with planetary gearbox
SIMOTICS S-1FK2 and S-1FT2 High Dynamic servomotors with planetary gearbox NRK155 1 and 2-stage													
4.5 ... 4.58	14.3 ... 14.4	1.71 (2.55)	n_{2N}	rpm	375	300	150	100	75	60	37.5	30	–	**1F.2105-4AF..-0..0-Z**
			M_{2N}	Nm	15.1	20.5	44	65	84	106	174	215	–	■■■ + ■■■ + . . .
			M_{2_0}	Nm	18	22.5	45.5	72	91	113	182	225	–	
			M_{2max}	Nm	57	71	144	225	285	355	570	712	–	
7.47 ... 7.54	22.9 ... 23.2	2.65 (3.5)	n_{2N}	rpm	300	300	150	100	75	60	37.5	30	–	**1F.2105-6AF..-0..0-Z**
			M_{2N}	Nm	25.5	28.5	66	87	124	156	260	325	–	■■■ + ■■■ + . . .
			M_{2_0}	Nm	29.5	37	75	119	149	187	295	370	–	
			M_{2max}	Nm	92	116	230	365	455	570	736	712	–	
7.9 ... 8.04	23.4 ... 23.7	4.6 (6.3)	n_{2N}	rpm	375	300	150	100	75	60	37.5	30	–	**1F.2106-3AF..-0..0-Z**
			M_{2N}	Nm	21	29.5	67	91	128	161	260	325	–	■■■ + ■■■ + . . .
			M_{2_0}	Nm	31.5	39.5	80	126	158	197	315	395	–	
			M_{2max}	Nm	94	118	235	370	465	580	736	712	–	
10.3 ... 10.5	31.1 ... 31.5	6 (7.6)	n_{2N}	rpm	300	300	150	100	75	60	37.5	30	–	**1F.2106-4AF..-0..0-Z**
			M_{2N}	Nm	33	36	82	106	153	192	320	400	–	■■■ + ■■■ + . . .
			M_{2_0}	Nm	41.5	52	104	164	205	255	410	445	–	
			M_{2max}	Nm	125	157	310	495	620	712	736	712	–	
14.5 ... 14.8	40.2 ... 40.8	8.7 (10.4)	n_{2N}	rpm	300	250	150	75	75	60	37.5	30	–	**1F.2106-6AF..-0..0-Z**
			M_{2N}	Nm	43.5	56	107	179	189	235	400	445	–	■■■ + ■■■ + . . .
			M_{2_0}	Nm	59	73	148	230	290	360	460	445	–	
			M_{2max}	Nm	163	200	336	640	736	712	736	712	–	
SIMOTICS S-1FK2 and S-1FT2 Compact servomotors with planetary gearbox NRK155 1 and 2-stage													
3.07 ... 3.15	10.2 ... 10.3	3.15 (4.05)	n_{2N}	rpm	375	300	150	100	75	60	37.5	30	15	**1F.2205-2AF..-0..0-Z**
			M_{2N}	Nm	9.2	12.3	26.5	39	51	65	107	135	210	■■■ + ■■■ + . . .
			M_{2_0}	Nm	12.2	15.4	31.5	49.5	62	77	124	156	210	
			M_{2max}	Nm	40.5	51	103	163	200	255	405	510	336	
5.3 ... 5.39	17.1 ... 17.3	5.1 (6)	n_{2N}	rpm	300	300	150	100	75	60	37.5	30	–	**1F.2205-4AF..-0..0-Z**
			M_{2N}	Nm	17.1	19.2	45	61	87	109	179	220	–	■■■ + ■■■ + . . .
			M_{2_0}	Nm	21	26.5	53	84	106	132	210	265	–	
			M_{2max}	Nm	69	86	173	270	340	425	680	712	–	

➥ Continued on the next page

Planetary gearbox data										
Gearbox type:		NRK155, 1-stage			NRK155, 2-stage					
1. Order code		B51			B52					
i		4	5	10	16	20	25	40	50	100
2. Order code		R04	R05	R10	R16	R20	R25	R40	R50	R00
$M_{2N,G}$	Nm	460	445	210	460	460	445	460	445	210
$M_{2max,G}$	Nm	736	712	336	736	736	712	736	712	336
$M_{2Em.Off}$	Nm	920	890	420	920	920	890	920	890	420
$J_{1,G}$	kg cm²	7.61	6.48	4.93	7.11	6.17	6.12	5.11	4.77	4.76
$\varphi_{2,G}$	'	6			9					

Color legend:		
	$M_{max,M} \times i < M_{2N,G}$	The motor and gearbox combination is fatigue-proof
	$M_{2N,G} < M_{max,M} \times i < M_{2max,G}$	Check acceleration and inertias, perform service life calculation if necessary
	$M_{max,M} \times i > M_{2max,G}$	The motor can destroy the gearbox, check acceleration and inertias, perform service life calculation if necessary

© Siemens 2022

Servomotor data $M_{0,M}$ Nm	M_{maxM} Nm	J_M ($J_{M,Br}$) kg cm²	Selection data servomotors with planetary gearbox										Servomotors with planetary gearbox
SIMOTICS S-1FK2 and S-1FT2 Compact servomotors with planetary gearbox NRK155 1 and 2-stage (continued)													
5.46 ... 5.54	17.1 ... 17.3	7.8 (9.4)	n_{2N}	rpm	375	300	150	100	75	60	37.5	30	–	**1F.2206-2AF..-0..0-Z**
			M_{2N}	Nm	16	21.5	45.5	68	88	111	182	225	–	■■■ + ■■■ + . . .
			$M_{2,0}$	Nm	21.5	27	55	87	109	136	215	270	–	
			M_{2max}	Nm	69	86	173	270	340	425	680	712	–	
10.7 ... 10.9	34.5 ... 35	15.1 (16.8)	n_{2N}	rpm	300	300	150	100	75	60	37.5	30	–	**1F.2206-4AF..-0..0-Z**
			M_{2N}	Nm	34	37	84	108	155	195	325	405	–	■■■ + ■■■ + . . .
			$M_{2,0}$	Nm	43	54	109	171	210	265	425	445	–	
			M_{2max}	Nm	139	174	336	550	690	712	736	712	–	
15.5 ... 15.8	49 ... 49.7	29.6 (33)	n_{2N}	rpm	250	200	100	75	50	50	25	–	–	**1F.2208-3AC..-0..0-Z**
			M_{2N}	Nm	48	63	132	169	250	260	460	–	–	■■■ + ■■■ + . . .
			$M_{2,0}$	Nm	63	78	158	245	310	385	460	–	–	
			M_{2max}	Nm	198	245	336	736	736	712	736	–	–	
19.3 ... 19.6	63.4 ... 64.3	38.8 (44.4)	n_{2N}	rpm	250	200	100	75	50	50	25	–	–	**1F.2208-4AC..-0..0-Z**
			M_{2N}	Nm	56	73	154	186	285	285	460	–	–	■■■ + ■■■ + . . .
			$M_{2,0}$	Nm	78	98	196	305	385	445	460	–	–	
			M_{2max}	Nm	255	320	336	736	736	712	730	–	–	
23.1 ... 23.5	77 ... 78	48.1 (53.6)	n_{2N}	rpm	250	200	100	60	50	37.5	–	–	–	**1F.2208-5AC..-0..0-Z**
			M_{2N}	Nm	61	80	170	250	310	405	–	–	–	■■■ + ■■■ + . . .
			$M_{2,0}$	Nm	94	117	210	365	455	445	–	–	–	
			M_{2max}	Nm	310	390	336	736	736	712	–	–	–	
28.3 ... 28.7	86.5 ... 87.8	93.8 (99.8)	n_{2N}	rpm	200	150	75	50	37.5	30	–	–	–	**1F.2210-3AB..-0..0-Z**
			M_{2N}	Nm	90	119	210	340	450	445	–	–	–	■■■ + ■■■ + . . .
			$M_{2,0}$	Nm	114	143	210	450	460	445	–	–	–	
			M_{2max}	Nm	350	435	336	736	736	712	–	–	–	
28.3 ... 28.7	86.5 ... 87.8	93.8 (99.8)	n_{2N}	rpm	250	200	100	60	50	37.5	–	–	–	**1F.2210-3AC..-0..0-Z**
			M_{2N}	Nm	73	95	200	285	350	445	–	–	–	■■■ + ■■■ + . . .
			$M_{2,0}$	Nm	114	143	210	450	460	445	–	–	–	
			M_{2max}	Nm	350	435	336	736	736	710	–	–	–	
37.7 ... 38.5	116 ... 117	122 (138)	n_{2N}	rpm	200	150	75	50	37.5	–	–	–	–	**1F.2210-4AB..-0..0-Z**
			M_{2N}	Nm	105	140	210	385	460	–	–	–	–	■■■ + ■■■ + . . .
			$M_{2,0}$	Nm	153	192	210	460	460	–	–	–	–	
			M_{2max}	Nm	465	580	335	736	736	–	–	–	–	
37.1 ... 37.8	116 ... 117	122 (138)	n_{2N}	rpm	200	200	100	50	50	–	–	–	–	**1F.2210-4AC..-0..0-Z**
			M_{2N}	Nm	104	106	210	380	375	–	–	–	–	■■■ + ■■■ + . . .
			$M_{2,0}$	Nm	151	188	210	460	460	–	–	–	–	
			M_{2max}	Nm	465	580	335	736	736	–	–	–	–	
44 ... 44.9	145 ... 147	150 (166)	n_{2N}	rpm	200	150	–	50	–	–	–	–	–	**1F.2210-5AC..-0..0-Z**
			M_{2N}	Nm	114	154	–	410	–	–	–	–	–	■■■ + ■■■ + . . .
			$M_{2,0}$	Nm	179	220	–	460	–	–	–	–	–	
			M_{2max}	Nm	580	712	–	736	–	–	–	–	–	

Planetary gearbox data										
Gearbox type:			NRK155, 1-stage			NRK155, 2-stage				
1. Order code			B51			B52				
	i		4	5	10	16	20	25	40	50	100
2. Order code			R04	R05	R10	R16	R20	R25	R40	R50	R00
	$M_{2N,G}$	Nm	460	445	210	460	460	445	460	445	210
	$M_{2max,G}$	Nm	736	712	336	736	736	712	736	712	336
	$M_{2Em.Off}$	Nm	920	890	420	920	920	890	920	890	420
	$J_{1,G}$	kg cm²	7.61	6.48	4.93	7.11	6.17	6.12	5.11	4.77	4.76
	$\varphi_{2,G}$	'	6			9					

Color legend:		
	$M_{max,M} \times i < M_{2N,G}$	The motor and gearbox combination is fatigue-proof
	$M_{2N,G} < M_{max,M} \times i < M_{2max,G}$	Check acceleration and inertias, perform service life calculation if necessary
	$M_{max,M} \times i > M_{2max,G}$	The motor can destroy the gearbox, check acceleration and inertias, perform service life calculation if necessary

© Siemens 2022

Gearbox type NLC060

Selection and ordering data

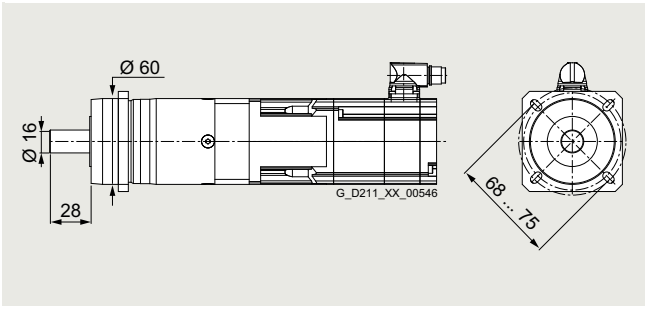

Permissible output shaft loads		
Average radial force for 20000 h	$F_{R,eq}$	3200 N
Average axial force for 20000 h	$F_{A,eq}$	4400 N
Average radial force for 30000 h	$F_{R,eq}$	3200 N
Average axial force for 30000 h	$F_{A,eq}$	3900 N
Maximum radial force	$F_{R,max}$	3200 N
Maximum axial force	$F_{A,max}$	4400 N

Servomotor data $M_{0,M}$ Nm	M_{maxM} Nm	J_M ($J_{M,Br}$) kg cm²	Selection data servomotors with planetary gearbox																	Servomotors with planetary gearbox
SIMOTICS S-1FK2 and S-1FT2 High Dynamic servomotors with planetary gearbox NLC060 1 and 2-stage																				
0.0485 ... 0.112	0.444 ... 0.504	0.0245 (0.0285)	n_{2N}	rpm	–	–	–	–	150	150	125	150	150	150	150	125	100	75	50	30	**1F.2102-0AG..-0..0-Z**
			M_{2N}	Nm	–	–	–	–	0.18	0.34	0.25	0.4	0.65	0.68	0.89	1.29	1.96	2.75	4.75	8.1	■■■ + ■■■ + . . .
			M_{2_0}	Nm	–	–	–	–	0.39	0.63	0.49	0.84	1.19	1.31	1.79	2.35	3.2	4.15	6.9	11.2	
			M_{2max}	Nm	–	–	–	–	3.55	4.55	4	5.5	7.1	7.6	9.6	12.2	15.7	19.8	29	24	
0.157 ... 0.257	0.938 ... 1.03	0.036 (0.04)	n_{2N}	rpm	–	–	375	375	300	300	300	250	200	200	150	125	100	75	50	–	**1F.2102-1AG..-0..0-Z**
			M_{2N}	Nm	–	–	0.38	0.7	1.01	1.31	1.03	1.56	2.35	2.4	3.45	4.45	6	7.9	12.9	–	■■■ + ■■■ + . . .
			M_{2_0}	Nm	–	–	0.78	1.33	1.61	2.15	1.82	2.6	3.4	3.65	4.75	6.1	7.9	10	16.4	–	
			M_{2max}	Nm	–	–	4.65	6.7	7.8	9.9	8.8	11.9	15	16	20	25	32.5	41	29	–	
0.39 ... 0.507	1.73 ... 1.83	0.093 (0.112)	n_{2N}	rpm	–	375	375	375	375	300	300	250	200	200	150	125	100	75	–	–	**1F.2103-2AG..-2..0-Z**
			M_{2N}	Nm	–	1.01	1.35	1.93	2.15	3	2.6	3.6	5	5.1	7.1	9	11.8	15.5	–	–	■■■ + ■■■ + . . .
			M_{2_0}	Nm	–	1.55	2.05	3.15	3.7	4.75	4.1	5.7	7.2	7.7	9.8	12.4	16.1	20	–	–	
			M_{2max}	Nm	–	6.9	8.7	12.5	14.4	18.1	16.1	21.5	27	29	36	45.5	58	64	–	–	
0.922 ... 1.07	3.74 ... 3.86	0.139 (0.158)	n_{2N}	rpm	375	375	375	300	300	250	250	200	200	200	150	125	100	75	–	–	**1F.2103-4AG..-2..0-Z**
			M_{2N}	Nm	2.05	2.7	3.25	5.2	5.6	7.6	7	9.6	11.3	11.1	15.6	19.5	25	32.5	–	–	■■■ + ■■■ + . . .
			M_{2_0}	Nm	2.75	3.85	4.95	7.2	8.3	10.5	9.2	12.4	15.7	16.8	21	26.5	34	40	–	–	
			M_{2max}	Nm	11.2	15.1	19	26.5	29	24	34	46	57	61	70	64	70	64	–	–	
1.01 ... 1.17	3.45 ... 3.58	0.371 (0.451)	n_{2N}	rpm	500	375	300	250	200	150	200	125	100	100	75	60	50	37.5	–	–	**1F.2104-4AF..-2..0-Z**
			M_{2N}	Nm	2	3.45	4.6	6.7	7.9	10.3	8.6	12.2	15.5	16.5	21	26.5	34	40	–	–	■■■ + ■■■ + . . .
			M_{2_0}	Nm	3	4.2	5.4	7.8	9	11.4	10.1	13.7	17.3	18.4	23	29	37	40	–	–	
			M_{2max}	Nm	10.3	13.9	17.6	24.5	28	24	31.5	42.5	53	56	70	64	70	64	–	–	
1.01 ... 1.17	3.55 ... 3.67	0.371 (0.451)	n_{2N}	rpm	500	375	375	375	300	300	300	250	200	200	150	125	100	75	–	–	**1F.2104-4AK..-2..0-Z**
			M_{2N}	Nm	2.15	3.75	4.75	5.8	7.8	9.1	8.2	11	14.4	15	19.7	24.5	31.5	40	–	–	■■■ + ■■■ + . . .
			M_{2_0}	Nm	3	4.2	5.4	7.8	9	11.3	10.1	13.6	17.1	18.3	23	28.5	37	40	–	–	
			M_{2max}	Nm	10.6	14.3	18.1	25.5	29	24	32.5	43.5	54	58	70	64	70	64	–	–	
2.12 ... 2.26	7.14 ... 7.25	0.581 (0.671)	n_{2N}	rpm	375	375	300	250	200	150	200	125	100	100	75	60	50	–	–	–	**1F.2104-5AF..-2..0-Z**
			M_{2N}	Nm	5.4	6.8	9.6	13.6	16	15	17.3	24	30.5	32	41	40	44	–	–	–	■■■ + ■■■ + . . .
			M_{2_0}	Nm	6.3	8.6	10.9	15.5	17.8	15	19.9	26.5	33.5	35.5	44	40	44	–	–	–	
			M_{2max}	Nm	21	28.5	36	40	29	24	64	70	70	70	70	64	70	–	–	–	

➥ Continued on the next page

Planetary gearbox data																	
Gearbox type:			NLC060, 1-stage						NLC060, 2-stage								
1. Order code			C21						C22								
	i		3	4	5	7	8	10	9	12	15	16	20	25	32	40	64	100
2. Order code			R03	R04	R05	R07	R08	R10	R09	R12	R15	R16	R20	R25	R32	R40	R64	R00
	$M_{2N,G}$	Nm	28	38	40	25	18	15	44	44	44	44	44	40	44	40	18	15
	$M_{2max,G}$	Nm	45	61	64	40	29	24	70	70	70	70	70	64	70	64	29	24
	$M_{2Em.Off}$	Nm	66	88	80	80	80	80	88	88	88	88	88	80	88	80	80	80
	$J_{1,G}$	kg cm²	0.178	0.12	0.097	0.078	0.074	0.069	0.135	0.129	0.081	0.091	0.079	0.078	0.068	0.067	0.067	0.064
	$\varphi_{2,G}$	'	10						12									

Color legend:		
	$M_{max,M} \times i < M_{2N,G}$	**The motor and gearbox combination is fatigue-proof**
	$M_{2N,G} < M_{max,M} \times i < M_{2max,G}$	**Check acceleration and inertias, perform service life calculation if necessary**
	$M_{max,M} \times i > M_{2max,G}$	**The motor can destroy the gearbox, check acceleration and inertias, perform service life calculation if necessary**

© Siemens 2022

Servomotor data $M_{0,M}$ Nm	M_{maxM} Nm	J_M ($J_{M,Br}$) kg cm²	Selection data servomotors with planetary gearbox																	Servomotors with planetary gearbox
SIMOTICS S-1FK2 and S-1FT2 High Dynamic servomotors with planetary gearbox NLC060 1 and 2-stage (continued)																				
2.1 ... 2.24	7.24 ... 7.35	0.581 (0.671)	n_{2N}	rpm	375	375	375	300	300	300	250	200	200	150	150	125	100	–	–	–	**1F.2104-5AK..-2..0-Z**
			M_{2N}	Nm	5.3	6.7	7.8	11.8	12.6	12.9	15.2	20.5	22.5	30	32	39.5	44	–	–	–	■■■ + ■■■ + . . .
			$M_{2,0}$	Nm	6.3	8.5	10.8	15.4	17.7	15	19.8	26.5	33	35.5	44	40	44	–	–	–	
			M_{2max}	Nm	21.5	29	36.5	40	29	24	65	70	70	70	70	64	70	–	–	–	
2.87 ... 2.99	9.6 ... 9.69	0.781 (0.861)	n_{2N}	rpm	375	375	300	250	200	–	200	125	100	100	75	60	–	–	–	–	**1F.2104-6AF..-2..0-Z**
			M_{2N}	Nm	6.7	8.4	11.8	16.8	18	–	22	33	41.5	44	44	40	–	–	–	–	■■■ + ■■■ + . . .
			$M_{2,0}$	Nm	8.6	11.6	14.7	20.5	18	–	26.5	35.5	44	44	44	40	–	–	–	–	
			M_{2max}	Nm	28.5	38.5	48	40	29	–	70	70	70	70	70	64	–	–	–	–	
4.51 ... 4.61	14.4 ... 14.5	1.98 (2.82)	n_{2N}	rpm	375	300	300	250	–	–	200	125	100	100	–	–	–	–	–	–	**1F.2105-4AF..-0..0-Z**
			M_{2N}	Nm	10.6	15.4	17.1	22.5	–	–	28.5	44	44	44	–	–	–	–	–	–	■■■ + ■■■ + . . .
			$M_{2,0}$	Nm	13.5	18.2	22.5	25	–	–	41	44	44	44	–	–	–	–	–	–	
			M_{2max}	Nm	43	57	64	40	–	–	70	70	70	70	–	–	–	–	–	–	
6.96 ... 7.02	23.1 ... 23.3	2.92 (3.77)	n_{2N}	rpm	300	300	250	–	–	–	150	–	–	–	–	–	–	–	–	–	**1F.2105-6AF..-0..0-Z**
			M_{2N}	Nm	17.8	20.5	26.5	–	–	–	44	–	–	–	–	–	–	–	–	–	■■■ + ■■■ + . . .
			$M_{2,0}$	Nm	20.5	27.5	35	–	–	–	44	–	–	–	–	–	–	–	–	–	
			M_{2max}	Nm	45	61	64	–	–	–	70	–	–	–	–	–	–	–	–	–	
SIMOTICS S-1FK2 and S-1FT2 Compact servomotors with planetary gearbox NLC060 1 and 2-stage																				
0.383 ... 0.555	1.58 ... 1.73	0.2 (0.22)	n_{2N}	rpm	375	375	375	375	300	300	300	250	200	200	150	125	100	75	–	–	**1F.2203-2AG..-2..0-Z**
			M_{2N}	Nm	0.73	1.11	1.43	1.87	2.55	2.9	2.55	3.45	4.95	4.95	7	8.9	11.7	15.7	–	–	■■■ + ■■■ + . . .
			$M_{2,0}$	Nm	1.14	1.72	2.3	3.45	4	5.1	4.55	6.2	7.9	8.5	10.8	13.6	17.6	22	–	–	
			M_{2max}	Nm	4.7	6.5	8.2	11.8	13.5	17.1	15.2	20	25.5	27	34	43	55	64	–	–	
1.01 ... 1.17	3.45 ... 3.58	0.35 (0.37)	n_{2N}	rpm	375	375	375	300	300	300	300	250	200	200	150	125	100	75	–	–	**1F.2203-4AG..-2..0-Z**
			M_{2N}	Nm	2.55	3.5	4.3	6.4	7.1	7.9	7.3	9.7	13	13.3	17.8	22	28.5	37	–	–	■■■ + ■■■ + . . .
			$M_{2,0}$	Nm	3	4.2	5.4	7.8	9	11.4	10.1	13.6	17.2	18.3	23	29	37	40	–	–	
			M_{2max}	Nm	10.3	13.9	17.6	24.5	28.5	24	31.5	42.5	53	56	70	64	70	64	–	–	
2.08 ... 2.21	6.73 ... 6.84	1.251 (1.331)	n_{2N}	rpm	375	375	300	250	200	150	200	125	100	100	75	60	50	–	–	–	**1F.2204-5AF..-2..0-Z**
			M_{2N}	Nm	5.2	6.5	9.1	12.9	15.2	15	16.4	23	29	30.5	39	40	44	–	–	–	■■■ + ■■■ + . . .
			$M_{2,0}$	Nm	6.2	8.4	10.7	15.2	17.5	15	19.6	26	33	35	44	40	44	–	–	–	
			M_{2max}	Nm	20	27	33.5	40	29	24	60	70	70	70	70	64	70	–	–	–	
2.09 ... 2.23	6.73 ... 6.84	1.251 (1.331)	n_{2N}	rpm	375	375	300	300	250	250	250	200	150	150	125	125	100	–	–	–	**1F.2204-5AK..-2..0-Z**
			M_{2N}	Nm	5.3	6.6	9.4	11.4	14.5	15	14.6	19.9	27.5	28.5	35.5	36	44	–	–	–	■■■ + ■■■ + . . .
			$M_{2,0}$	Nm	6.2	8.5	10.8	15.3	17.6	15	19.7	26	33	35	44	40	44	–	–	–	
			M_{2max}	Nm	20	27	33.5	40	29	24	60	70	70	70	70	64	70	–	–	–	
2.85 ... 2.98	9.09 ... 9.18	1.631 (1.711)	n_{2N}	rpm	375	375	300	250	200	–	200	125	100	100	75	60	–	–	–	–	**1F.2204-6AF..-2..0-Z**
			M_{2N}	Nm	7.1	8.7	12.4	17.5	18	–	22.5	33	41.5	43.5	44	40	–	–	–	–	■■■ + ■■■ + . . .
			$M_{2,0}$	Nm	8.5	11.5	14.6	20.5	18	–	26.5	35.5	44	44	44	40	–	–	–	–	
			M_{2max}	Nm	27	36.5	45.5	40	29	–	70	70	70	70	70	64	–	–	–	–	
2.66 ... 2.78	10.3 ... 10.4	3.42 (4.32)	n_{2N}	rpm	375	375	300	250	200	–	200	125	100	100	75	–	–	–	–	–	**1F.2205-2AF..-0..0-Z**
			M_{2N}	Nm	6.7	7.6	11.3	15.5	18	–	20.5	28.5	36	38	44	–	–	–	–	–	■■■ + ■■■ + . . .
			$M_{2,0}$	Nm	7.9	10.8	13.6	19.3	18	–	24.5	33	41.5	43.5	44	–	–	–	–	–	
			M_{2max}	Nm	30.5	41	51	40	29	–	70	70	70	70	70	–	–	–	–	–	

➥ Continued on the next page

Planetary gearbox data																	
Gearbox type:			NLC060, 1-stage						NLC060, 2-stage								
1. Order code			C21						C22								
	i		3	4	5	7	8	10	9	12	15	16	20	25	32	40	64	100
2. Order code			R03	R04	R05	R07	R08	R10	R09	R12	R15	R16	R20	R25	R32	R40	R64	R00
	$M_{2N,G}$	Nm	28	38	40	25	18	15	44	44	44	44	44	40	44	40	18	15
	$M_{2max,G}$	Nm	45	61	64	40	29	24	70	70	70	70	70	64	70	64	29	24
	$M_{2Em.Off}$	Nm	66	88	80	80	80	80	88	88	88	88	88	80	88	80	80	80
	$J_{1,G}$	kg cm²	0.178	0.12	0.097	0.078	0.074	0.069	0.135	0.129	0.081	0.091	0.079	0.078	0.068	0.067	0.067	0.064
	$\varphi_{2,G}$	'	10						12									

Color legend:

	$M_{max,M} \times i < M_{2N,G}$	The motor and gearbox combination is fatigue-proof
	$M_{2N,G} < M_{max,M} \times i < M_{2max,G}$	Check acceleration and inertias, perform service life calculation if necessary
	$M_{max,M} \times i > M_{2max,G}$	The motor can destroy the gearbox, check acceleration and inertias, perform service life calculation if necessary

© Siemens 2022

Gearbox type NLC060

Servomotor data

$M_{0,M}$	M_{maxM}	J_M ($J_{M,Br}$)
Nm	Nm	kg cm²
4.69 ... 4.79	17.3 ... 17.4	5.37 (6.27)

Selection data servomotors with planetary gearbox

Servomotors with planetary gearbox

SIMOTICS S-1FK2 and S-1FT2 Compact servomotors with planetary gearbox NLC060 1 and 2-stage (continued)

1F.2205-4AF..-0..0-Z ■■■ + ■■■ + . . .

n_{2N}	rpm	300	300	250	200	–	–	150	125	–	–	–	–	–	–	–	–
M_{2N}	Nm	11.9	13.9	18.4	24.5	–	–	35	43.5	–	–	–	–	–	–	–	–
$M_{2,0}$	Nm	14	18.9	23.5	25	–	–	42.5	44	–	–	–	–	–	–	–	–
M_{2max}	Nm	45	61	64	40	–	–	70	70	–	–	–	–	–	–	–	–

Planetary gearbox data

Gearbox type:		**NLC060, 1-stage**						**NLC060, 2-stage**									
1. Order code		**C21**						**C22**									
i		**3**	**4**	**5**	**7**	**8**	**10**	**9**	**12**	**15**	**16**	**20**	**25**	**32**	**40**	**64**	**100**
2. Order code		**R03**	**R04**	**R05**	**R07**	**R08**	**R10**	**R09**	**R12**	**R15**	**R16**	**R20**	**R25**	**R32**	**R40**	**R64**	**R00**
$M_{2N,G}$	Nm	28	38	40	25	18	15	44	44	44	44	44	40	44	40	18	15
$M_{2max,G}$	Nm	45	61	64	40	29	24	70	70	70	70	70	64	70	64	29	24
$M_{2Em.Off}$	Nm	66	88	80	80	80	80	88	88	88	88	88	80	88	80	80	80
$J_{1,G}$	kg cm²	0.178	0.12	0.097	0.078	0.074	0.069	0.135	0.129	0.081	0.091	0.079	0.078	0.068	0.067	0.067	0.064
$\varphi_{2,G}$	'	10						12									

Color legend:		
	$M_{max,M} \times i < M_{2N,G}$	**The motor and gearbox combination is fatigue-proof**
	$M_{2N,G} < M_{max,M} \times i < M_{2max,G}$	**Check acceleration and inertias, perform service life calculation if necessary**
	$M_{max,M} \times i > M_{2max,G}$	**The motor can destroy the gearbox, check acceleration and inertias, perform service life calculation if necessary**

© Siemens 2022

Selection and ordering data

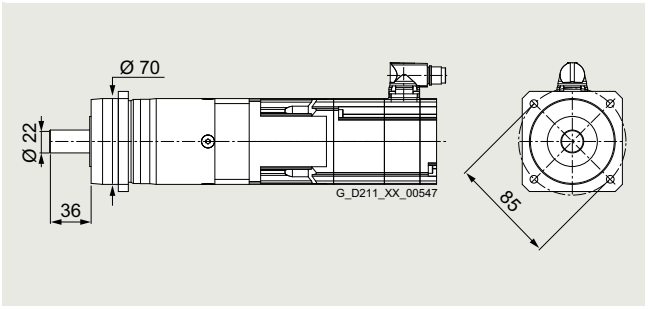

Permissible output shaft loads		
Average radial force for 20000 h	$F_{R,eq}$	5500 N
Average axial force for 20000 h	$F_{A,eq}$	6400 N
Average radial force for 30000 h	$F_{R,eq}$	4800 N
Average axial force for 30000 h	$F_{A,eq}$	5700 N
Maximum radial force	$F_{R,max}$	5500 N
Maximum axial force	$F_{A,max}$	6400 N

Servomotor data			Selection data servomotors with planetary gearbox																	Servomotors with planetary gearbox
$M_{0,M}$	M_{maxM}	J_M ($J_{M,Br}$)																		
Nm	Nm	kg cm²																		
SIMOTICS S-1FK2 and S-1FT2 High Dynamic servomotors with planetary gearbox NLC080 1 and 2-stage																				
0.318	1.62	0.093	n_{2N}	rpm	–	300	300	300	300	300	250	250	200	200	150	125	100	75	50	30	**1F.2103-2AG..-0..0-Z**
...	...	(0.112)	M_{2N}	Nm	–	0.66	1.02	1.65	1.91	2.3	2.25	2.65	3.8	3.85	5.9	7.6	10.6	14.1	22.5	37.5	■■■ + ■■■ + . . .
0.517	1.8		M_{2_0}	Nm	–	1.27	1.81	2.9	3.45	4.5	3.85	5.4	7	7.5	9.6	12.2	15.9	20	32.5	38	
			M_{2max}	Nm	–	6.4	8.3	11.9	13.8	17.5	15.5	20.5	26	28	35	44.5	57	71	80	61	
0.862	3.6	0.139	n_{2N}	rpm	375	375	300	300	250	250	250	200	200	150	150	125	100	75	50	–	**1F.2103-4AG..-0..0-Z**
...	...	(0.158)	M_{2N}	Nm	1.82	2.35	3.7	5	6.4	7.5	6.7	9.2	10	12.8	15.1	18.9	25	32.5	50	–	■■■ + ■■■ + . . .
1.11	3.82		M_{2_0}	Nm	2.55	3.7	4.9	7.2	8.3	10.7	9.3	12.6	16	17.1	21.5	27	35	44	50	–	
			M_{2max}	Nm	10.8	14.6	18.5	26	30	38	33.5	45	56	60	75	95	121	152	80	–	
0.875	3.31	0.35	n_{2N}	rpm	375	375	300	250	200	150	200	125	100	100	75	60	50	37.5	25	–	**1F.2104-4AF..-2..0-Z**
...	...	(0.43)	M_{2N}	Nm	2.1	3	4.15	6.2	7.5	10	8.2	11.8	15.1	16	20.5	26	33.5	43	50	–	■■■ + ■■■ + . . .
1.14	3.53		M_{2_0}	Nm	2.6	3.75	4.95	7.3	8.4	10.8	9.5	13	16.5	17.6	22	28	36	45	50	–	
			M_{2max}	Nm	9.9	13.5	17.1	24	27.5	35	31	41.5	52	56	70	87	112	141	80	–	
0.869	3.41	0.35	n_{2N}	rpm	375	375	375	300	300	300	300	250	200	200	150	125	100	75	50	–	**1F.2104-4AK..-2..0-Z**
...	...	(0.43)	M_{2N}	Nm	2.35	3.3	4.25	6.5	7.3	8.2	7.6	10.1	13.4	13.9	18.9	23.5	31	40	50	–	■■■ + ■■■ + . . .
1.14	3.63		M_{2_0}	Nm	2.6	3.75	4.9	7.2	8.4	10.7	9.5	12.9	16.4	17.5	22	27.5	35.5	45	50	–	
			M_{2max}	Nm	10.2	13.9	17.6	25	28.5	36	32	43	54	57	72	90	115	145	80	–	
1.98	7	0.56	n_{2N}	rpm	375	375	300	250	200	150	200	125	100	100	75	60	50	37.5	–	–	**1F.2104-5AF..-2..0-Z**
...	...	(0.65)	M_{2N}	Nm	5.3	6.6	9.4	13.5	16	20.5	17.3	24	30.5	32.5	41.5	52	67	84	–	–	■■■ + ■■■ + . . .
2.22	7.18		M_{2_0}	Nm	5.9	8.2	10.4	15	17.2	21.5	19.3	26	32.5	35	44	55	70	88	–	–	
			M_{2max}	Nm	21	28	35.5	50	57	61	64	85	107	114	142	176	192	176	–	–	
1.96	7.1	0.56	n_{2N}	rpm	375	375	300	300	250	250	250	200	150	150	150	100	100	75	–	–	**1F.2104-5AK..-2..0-Z**
...	...	(0.65)	M_{2N}	Nm	5.3	6.5	9.7	12	15.5	17.1	16	22	29.5	31	33	49.5	56	77	–	–	■■■ + ■■■ + . . .
2.2	7.28		M_{2_0}	Nm	5.8	8.1	10.4	14.9	17.1	21.5	19.2	25.5	32.5	34.5	43.5	54	70	88	–	–	
			M_{2max}	Nm	21	28.5	36	50	58	61	64	86	108	115	144	176	192	176	–	–	
2.73	9.46	0.76	n_{2N}	rpm	375	375	300	250	200	150	200	125	100	100	75	60	50	37.5	–	–	**1F.2104-6AF..-2..0-Z**
...	...	(0.84)	M_{2N}	Nm	6.8	8.3	12.2	17.8	22	28.5	24	33.5	42	44.5	56	71	91	110	–	–	■■■ + ■■■ + . . .
2.96	9.63		M_{2_0}	Nm	8.1	11.2	14.2	20	23	29	26	35	43.5	46.5	58	73	94	110	–	–	
			M_{2max}	Nm	28	38	47.5	67	76	61	85	114	143	152	191	176	192	176	–	–	

➥ Continued on the next page

Planetary gearbox data																	
Gearbox type:			NLC080, 1-stage						NLC080, 2-stage								
1. Order code			C31						C32								
	i		3	4	5	7	8	10	9	12	15	16	20	25	32	40	64	100
2. Order code			R03	R04	R05	R07	R08	R10	R09	R12	R15	R16	R20	R25	R32	R40	R64	R00
	$M_{2N,G}$	Nm	85	115	110	65	50	38	130	120	110	120	120	110	120	110	50	38
	$M_{2max,G}$	Nm	136	184	176	104	80	61	208	192	176	192	192	176	192	176	80	61
	$M_{2Em.Off}$	Nm	180	240	220	178	190	200	260	240	220	240	240	220	240	220	190	200
	$J_{1,G}$	kg cm²	0.775	0.54	0.466	0.401	0.387	0.37	0.641	0.615	0.607	0.46	0.415	0.412	0.37	0.368	0.369	0.357
	$\varphi_{2,G}$	'	7						9									

Color legend:		
	$M_{max,M} \times i < M_{2N,G}$	**The motor and gearbox combination is fatigue-proof**
	$M_{2N,G} < M_{max,M} \times i < M_{2max,G}$	**Check acceleration and inertias, perform service life calculation if necessary**
	$M_{max,M} \times i > M_{2max,G}$	**The motor can destroy the gearbox, check acceleration and inertias, perform service life calculation if necessary**

© Siemens 2022

SIMOTICS S-1FK2 and S-1FT2 servo planetary geared motors
for servo converters with line connection 230 V 1 AC / 240 V 3 AC

Gearbox type NLC080

Servomotor data $M_{0,M}$ Nm	M_{maxM} Nm	J_M ($J_{M,Br}$) kg cm²	Selection data servomotors with planetary gearbox																Servomotors with planetary gearbox
SIMOTICS S-1FK2 and S-1FT2 High Dynamic servomotors with planetary gearbox NLC080 1 and 2-stage (continued)																			
4.47 ... 4.66	14.4 ... 14.5	1.71 (2.55)	n_{2N}	rpm	375	375	300	250	200	150	200	125	100	100	75	60	50	37.5	–	–	**1F.2105-4AF..-0..0-Z**
			M_{2N}	Nm	11.5	14	19.3	27	31.5	38	34	48	60	63	81	102	120	110	–	–	■■■ + ■■■ + . . .
			$M_{2,0}$	Nm	13.4	18.1	22.5	32	37	38	41	55	69	74	92	110	120	110	–	–	
			M_{2max}	Nm	43	57	72	101	80	61	129	172	176	192	192	176	192	176	–	–	
7.08 ... 7.25	23 ... 23.3	2.65 (3.5)	n_{2N}	rpm	375	300	300	250	200	–	200	125	100	100	75	60	–	–	–	–	**1F.2105-6AF..-0..0-Z**
			M_{2N}	Nm	16.7	24	26.5	37	48	–	47	72	90	95	120	110	–	–	–	–	■■■ + ■■■ + . . .
			$M_{2,0}$	Nm	21	28.5	35.5	50	50	–	64	85	107	114	120	110	–	–	–	–	
			M_{2max}	Nm	69	92	116	104	80	–	208	192	176	192	192	176	–	–	–	–	
7.18 ... 7.34	23.4 ... 23.7	5.472 (7.172)	n_{2N}	rpm	300	300	250	200	200	–	150	125	100	100	75	–	–	–	–	–	**1F.2106-3AF..-0..0-Z**
			M_{2N}	Nm	18.7	21	28.5	39.5	39.5	–	54	67	86	85	118	–	–	–	–	–	■■■ + ■■■ + . . .
			$M_{2,0}$	Nm	21.5	28.5	36	51	50	–	65	87	109	116	120	–	–	–	–	–	
			M_{2max}	Nm	70	94	118	104	80	–	208	192	176	192	192	–	–	–	–	–	
9.37 ... 9.53	31.1 ... 31.5	6.872 (8.472)	n_{2N}	rpm	300	250	250	200	200	–	150	125	100	100	75	–	–	–	–	–	**1F.2106-4AF..-0..0-Z**
			M_{2N}	Nm	23.5	31.5	34	47	45	–	64	76	98	94	120	–	–	–	–	–	■■■ + ■■■ + . . .
			$M_{2,0}$	Nm	28	37.5	47	65	50	–	84	112	110	120	120	–	–	–	–	–	
			M_{2max}	Nm	94	125	157	104	79	–	208	192	176	192	191	–	–	–	–	–	
SIMOTICS S-1FK2 and S-1FT2 Compact servomotors with planetary gearbox NLC080 1 and 2-stage																			
0.321 ... 0.53	1.52 ... 1.7	0.2 (0.22)	n_{2N}	rpm	–	300	300	300	250	250	250	200	150	150	150	125	100	75	50	30	**1F.2203-2AG..-0..0-Z**
			M_{2N}	Nm	–	0.82	1.18	1.76	2.35	2.8	2.35	3.5	5.1	5.2	5.9	7.5	10.5	14.4	23	38	■■■ + ■■■ + . . .
			$M_{2,0}$	Nm	–	1.28	1.83	2.9	3.45	4.55	3.95	5.6	7.2	7.7	9.9	12.6	16.4	20.5	33.5	38	
			M_{2max}	Nm	–	6	7.8	11.2	13	16.5	14.6	19.7	24.5	26.5	33	42	54	67	80	61	
0.87 ... 1.14	3.32 ... 3.53	0.35 (0.37)	n_{2N}	rpm	375	375	375	300	300	250	300	250	200	200	150	125	100	75	50	–	**1F.2203-4AG..-0..0-Z**
			M_{2N}	Nm	2.2	3.1	3.9	6	6.7	8.8	6.7	8.9	12	12.3	17.1	21	28	37	50	–	■■■ + ■■■ + . . .
			$M_{2,0}$	Nm	2.6	3.75	4.9	7.2	8.4	10.7	9.5	12.9	16.4	17.5	22	27.5	36	45	50	–	
			M_{2max}	Nm	9.9	13.5	17.1	24	27.5	35	31	41.5	52	56	70	87	112	141	80	–	
1.94 ... 2.18	6.59 ... 6.78	1.23 (1.31)	n_{2N}	rpm	375	375	300	250	200	150	200	125	100	100	75	60	50	37.5	–	–	**1F.2204-5AF..-2..0-Z**
			M_{2N}	Nm	5	6.3	8.9	12.7	15.2	19.7	16.3	23	29	30.5	39.5	49.5	63	80	–	–	■■■ + ■■■ + . . .
			$M_{2,0}$	Nm	5.8	8	10.2	14.7	16.9	21	19	25.5	32	34	43	54	69	87	–	–	
			M_{2max}	Nm	19.7	26.5	33	47	54	61	60	80	100	107	134	168	192	176	–	–	
1.95 ... 2.19	6.59 ... 6.78	1.23 (1.31)	n_{2N}	rpm	375	375	300	300	250	250	250	200	150	150	150	125	100	75	–	–	**1F.2204-5AK..-2..0-Z**
			M_{2N}	Nm	5.2	6.4	9.2	11.6	14.8	16.2	15.4	20.5	27	28.5	30.5	37.5	52	68	–	–	■■■ + ■■■ + . . .
			$M_{2,0}$	Nm	5.8	8	10.3	14.8	17	21.5	19.1	25.5	32	34.5	43	54	70	87	–	–	
			M_{2max}	Nm	19.7	26.5	33	47	54	61	60	80	100	107	134	168	192	176	–	–	
2.72 ... 2.94	8.96 ... 9.13	1.61 (1.69)	n_{2N}	rpm	375	375	300	250	200	150	200	125	100	100	75	60	50	37.5	–	–	**1F.2204-6AF..-2..0-Z**
			M_{2N}	Nm	7.3	8.7	12.9	18.6	22	28.5	23.5	33.5	42	44.5	56	71	91	110	–	–	■■■ + ■■■ + . . .
			$M_{2,0}$	Nm	8.1	11.1	14.1	20	23	29	25.5	34.5	43.5	46.5	58	73	94	110	–	–	
			M_{2max}	Nm	26.5	36	45	63	72	61	81	108	135	144	181	176	192	176	–	–	
2.67 ... 2.87	10.2 ... 10.4	3.15 (4.05)	n_{2N}	rpm	375	375	300	250	200	150	200	125	100	100	75	60	50	37.5	–	–	**1F.2205-2AF..-0..0-Z**
			M_{2N}	Nm	6.7	8.8	11.7	16.6	19.6	25	21	29.5	37.5	39.5	50	63	81	103	–	–	■■■ + ■■■ + . . .
			$M_{2,0}$	Nm	8	10.9	13.9	19.8	22.5	28.5	25	33.5	42.5	45	57	71	91	110	–	–	
			M_{2max}	Nm	30.5	41	51	72	80	61	92	123	154	164	192	176	192	176	–	–	

➥ Continued on the next page

Planetary gearbox data																	
Gearbox type:			NLC080, 1-stage						NLC080, 2-stage								
1. Order code			C31						C32								
	i		3	4	5	7	8	10	9	12	15	16	20	25	32	40	64	100
2. Order code			R03	R04	R05	R07	R08	R10	R09	R12	R15	R16	R20	R25	R32	R40	R64	R00
	$M_{2N,G}$	Nm	85	115	110	65	50	38	130	120	110	120	120	110	120	110	50	38
	$M_{2max,G}$	Nm	136	184	176	104	80	61	208	192	176	192	192	176	192	176	80	61
	$M_{2Em.Off}$	Nm	180	240	220	178	190	200	260	240	220	240	240	220	240	220	190	200
	$J_{1,G}$	kg cm²	0.775	0.54	0.466	0.401	0.387	0.37	0.641	0.615	0.607	0.46	0.415	0.412	0.37	0.368	0.369	0.357
	$\varphi_{2,G}$	'	7						9									

Color legend:		
	$M_{max,M} \times i < M_{2N,G}$	The motor and gearbox combination is fatigue-proof
	$M_{2N,G} < M_{max,M} \times i < M_{2max,G}$	Check acceleration and inertias, perform service life calculation if necessary
	$M_{max,M} \times i > M_{2max,G}$	The motor can destroy the gearbox, check acceleration and inertias, perform service life calculation if necessary

© Siemens 2022

Servomotor data			Selection data servomotors with planetary gearbox																Servomotors with planetary gearbox
$M_{0,M}$	M_{maxM}	J_M ($J_{M,Br}$)																	
Nm	Nm	kg cm²																	
SIMOTICS S-1FK2 and S-1FT2 Compact servomotors with planetary gearbox NLC080 1 and 2-stage (continued)																			
4.75	17.2	5.1	n_{2N}	rpm	375	300	300	250	200	150	200	125	100	100	75	60	50	–	–	–	**1F.2205-4AF..-0..0-Z**
...	...	(6)	M_{2N}	Nm	11	16.2	18.3	25.5	32.5	38	34	49	62	65	83	104	120	–	–	–	■■■ + ■■■ + . . .
4.94	17.4		$M_{2,0}$	Nm	14.2	19.2	24	34	39	38	43.5	58	73	77	97	110	120	–	–	–	
			M_{2max}	Nm	51	69	86	104	80	61	155	192	176	192	192	176	192	–	–	–	
4.9	17.2	8.672	n_{2N}	rpm	375	300	250	200	200	–	150	125	100	100	75	–	–	–	–	–	**1F.2206-2AF..-0..0-Z**
...	...	(10.272)	M_{2N}	Nm	10.9	16.2	20.5	29	31	–	37.5	49	62	64	83	–	–	–	–	–	■■■ + ■■■ + . . .
5.07	17.3		$M_{2,0}$	Nm	14.7	19.8	25	35	40.5	–	45	60	75	80	100	–	–	–	–	–	
			M_{2max}	Nm	51	69	86	104	80	–	154	192	176	192	192	–	–	–	–	–	
9.84	34.6	15.972	n_{2N}	rpm	300	250	250	200	200	–	150	100	100	100	75	–	–	–	–	–	**1F.2206-4AF..-0..0-Z**
...	...	(17.672)	M_{2N}	Nm	24.5	33	35	48	46	–	65	100	100	96	120	–	–	–	–	–	■■■ + ■■■ + . . .
9.99	35		$M_{2,0}$	Nm	29.5	39.5	49.5	65	50	–	88	118	110	120	120	–	–	–	–	–	
			M_{2max}	Nm	104	139	174	104	79	–	208	192	176	192	191	–	–	–	–	–	

Planetary gearbox data																		
Gearbox type:			**NLC080, 1-stage**						**NLC080, 2-stage**									
1. Order code			**C31**						**C32**									
i			**3**	**4**	**5**	**7**	**8**	**10**	**9**	**12**	**15**	**16**	**20**	**25**	**32**	**40**	**64**	**100**
2. Order code			**R03**	**R04**	**R05**	**R07**	**R08**	**R10**	**R09**	**R12**	**R15**	**R16**	**R20**	**R25**	**R32**	**R40**	**R64**	**R00**
	$M_{2N,G}$	Nm	85	115	110	65	50	38	130	120	110	120	120	110	120	110	50	38
	$M_{2max,G}$	Nm	136	184	176	104	80	61	208	192	176	192	192	176	192	176	80	61
	$M_{2Em.Off}$	Nm	180	240	220	178	190	200	260	240	220	240	240	220	240	220	190	200
	$J_{1,G}$	kg cm²	0.775	0.54	0.466	0.401	0.387	0.37	0.641	0.615	0.607	0.46	0.415	0.412	0.37	0.368	0.369	0.357
	$\varphi_{2,G}$	'	7						9									

Color legend:		
	$M_{max,M} \times i < M_{2N,G}$	**The motor and gearbox combination is fatigue-proof**
	$M_{2N,G} < M_{max,M} \times i < M_{2max,G}$	**Check acceleration and inertias, perform service life calculation if necessary**
	$M_{max,M} \times i > M_{2max,G}$	**The motor can destroy the gearbox, check acceleration and inertias, perform service life calculation if necessary**

© Siemens 2022

Gearbox type NLC120

Selection and ordering data

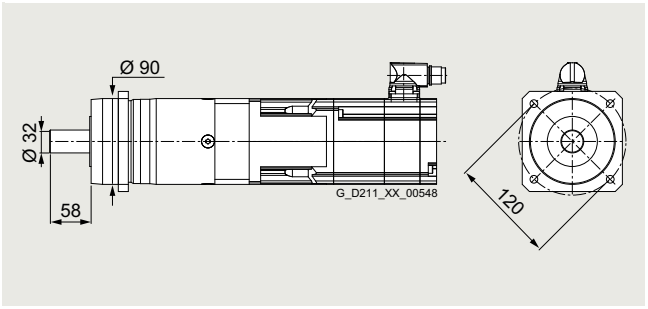

Permissible output shaft loads		
Average radial force for 20000 h	$F_{R,eq}$	6000 N
Average axial force for 20000 h	$F_{A,eq}$	8000 N
Average radial force for 30000 h	$F_{R,eq}$	5400 N
Average axial force for 30000 h	$F_{A,eq}$	7000 N
Maximum radial force	$F_{R,max}$	6000 N
Maximum axial force	$F_{A,max}$	8000 N

3 4

Servomotor data $M_{0,M}$ Nm	M_{maxM} Nm	J_M ($J_{M,Br}$) kg cm²	Selection data servomotors with planetary gearbox																	Servomotors with planetary gearbox
SIMOTICS S-1FK2 and S-1FT2 High Dynamic servomotors with planetary gearbox NLC120 1 and 2-stage																				
0.239 ... 0.468	1.53 ... 1.74	0.093 (0.112)	n_{2N}	rpm	–	–	200	200	200	200	150	125	100	100	100	75	75	60	50	30	**1F.2103-2AG..-0..0-Z**
			M_{2N}	Nm	–	–	0.7	1.37	1.64	2.05	1.94	2.85	4.1	4.35	5.4	7.7	9.6	12.6	16.2	29.5	■■■ + ■■■ + . . .
			M_{2_0}	Nm	–	–	1.19	2.15	2.65	3.6	3.1	4.55	6	6.4	8.4	10.8	14.1	18	29.5	46.5	
			M_{2max}	Nm	–	–	7.6	11.1	12.9	16.5	14.6	19.8	25	26.5	33.5	42.5	54	68	110	152	
0.681 ... 1.07	3.42 ... 3.75	0.139 (0.158)	n_{2N}	rpm	300	250	250	200	200	200	150	150	125	100	100	75	75	60	37.5	25	**1F.2103-4AG..-0..0-Z**
			M_{2N}	Nm	1.51	2.65	3.35	5.7	6.2	6.9	7.7	9	11.8	14.6	17.5	23.5	27.5	35.5	59	94	■■■ + ■■■ + . . .
			M_{2_0}	Nm	2	3.1	4.2	6.4	7.5	9.7	8.5	11.7	15	16	20	25.5	33	41.5	67	95	
			M_{2max}	Nm	10.2	14	17.9	25.5	29	37	32.5	44	55	59	74	93	119	149	192	152	
0.695 ... 1.08	3.13 ... 3.47	0.35 (0.43)	n_{2N}	rpm	375	300	300	250	200	150	200	125	100	100	75	60	50	37.5	25	15	**1F.2104-4AF..-0..0-Z**
			M_{2N}	Nm	1.51	2.6	3.5	5.5	7	9.3	7	10.8	13.8	14.8	19.3	24.5	32	40.5	65	95	■■■ + ■■■ + . . .
			M_{2_0}	Nm	2.05	3.15	4.3	6.5	7.6	9.8	8.6	11.9	15.2	16.3	20.5	26	33.5	42	68	95	
			M_{2max}	Nm	9.4	12.9	16.4	23.5	27	34	30	40.5	51	54	68	85	110	138	192	152	
0.688 ... 1.07	3.23 ... 3.57	0.35 (0.43)	n_{2N}	rpm	375	300	300	250	250	200	200	150	150	150	125	100	100	75	50	30	**1F.2104-4AK..-0..0-Z**
			M_{2N}	Nm	1.69	2.75	3.8	5.9	7	9.1	7.5	10.5	12.7	12.7	18.2	23.5	24.5	37.5	57	95	■■■ + ■■■ + . . .
			M_{2_0}	Nm	2.05	3.15	4.25	6.4	7.5	9.7	8.5	11.8	15.1	16.1	20.5	25.5	33.5	42	68	95	
			M_{2max}	Nm	9.6	13.3	16.9	24	27.5	35	31	41.5	52	56	70	88	113	142	192	152	
1.8 ... 2.16	6.82 ... 7.09	0.56 (0.65)	n_{2N}	rpm	300	300	250	250	200	150	200	125	100	100	75	60	50	37.5	25	–	**1F.2104-5AF..-0..0-Z**
			M_{2N}	Nm	5.1	6.6	9.3	11.8	15.7	20	15.2	23.5	30	32	40.5	51	66	83	120	–	■■■ + ■■■ + . . .
			M_{2_0}	Nm	5.3	7.6	9.8	14.2	16.4	20.5	18.4	25	31.5	33.5	42	53	68	85	120	–	
			M_{2max}	Nm	20	27.5	34.5	49	56	70	63	84	105	112	141	176	225	280	192	–	
1.78 ... 2.14	6.92 ... 7.18	0.56 (0.65)	n_{2N}	rpm	300	300	250	250	200	200	200	150	125	125	100	100	75	60	37.5	–	**1F.2104-5AK..-0..0-Z**
			M_{2N}	Nm	5	6.5	9.2	11.5	15.5	17.2	14.9	21.5	27.5	28	39	38.5	60	76	120	–	■■■ + ■■■ + . . .
			M_{2_0}	Nm	5.3	7.5	9.7	14.1	16.3	20.5	18.3	24.5	31	33	42	52	68	85	120	–	
			M_{2max}	Nm	20.5	28	35	49.5	57	71	63	85	107	114	143	178	225	285	192	–	
2.55 ... 2.89	9.28 ... 9.54	0.76 (0.84)	n_{2N}	rpm	300	300	250	250	200	150	200	125	100	100	75	60	50	37.5	25	–	**1F.2104-6AF..-0..0-Z**
			M_{2N}	Nm	6.8	8.4	11.8	14.6	19.5	27	18.6	32	41	43	55	69	90	113	120	–	■■■ + ■■■ + . . .
			M_{2_0}	Nm	7.6	10.6	13.5	19.4	22	28	25	33.5	42.5	45.5	57	71	92	115	120	–	
			M_{2max}	Nm	27.5	37	47	66	76	95	84	113	142	151	189	235	300	368	192	–	

➥ Continued on the next page

Planetary gearbox data																
Gearbox type:			NLC120, 1-stage						NLC120, 2-stage							
1. Order code			C41						C42							
	i		3	4	5	7	8	10	9	12	15	16	20	25	32	40	64	100
2. Order code			R03	R04	R05	R07	R08	R10	R09	R12	R15	R16	R20	R25	R32	R40	R64	R00
	$M_{2N,G}$	Nm	115	155	195	135	120	95	210	260	230	260	260	230	260	230	120	95
	$M_{2max,G}$	Nm	184	248	312	216	192	152	336	416	368	416	416	368	416	368	192	152
	$M_{2Em.Off}$	Nm	390	520	500	340	380	480	500	520	500	520	520	500	520	500	380	480
	$J_{1,G}$	kg cm²	2.49	1.91	1.76	1.49	1.43	1.39	2.33	2.26	2.23	1.77	1.59	1.58	1.42	1.42	1.42	1.38
	$\varphi_{2,G}$	'	7						9									

Color legend:		
	$M_{max,M} \times i < M_{2N,G}$	**The motor and gearbox combination is fatigue-proof**
	$M_{2N,G} < M_{max,M} \times i < M_{2max,G}$	**Check acceleration and inertias, perform service life calculation if necessary**
	$M_{max,M} \times i > M_{2max,G}$	**The motor can destroy the gearbox, check acceleration and inertias, perform service life calculation if necessary**

© Siemens 2022

Servomotor data $M_{0,M}$ Nm	M_{maxM} Nm	J_M ($J_{M,Br}$) kg cm²	Selection data servomotors with planetary gearbox																	Servomotors with planetary gearbox
SIMOTICS S-1FK2 and S-1FT2 High Dynamic servomotors with planetary gearbox NLC120 1 and 2-stage (continued)																				
4.29 ... 4.59	14.2 ... 14.4	1.71 (2.55)	n_{2N}	rpm	375	300	250	250	200	150	200	125	100	100	75	60	50	37.5	–	–	**1F.2105-4AF..-0..0-Z**
			M_{2N}	Nm	9.8	15	20	23.5	32	42.5	29.5	49	62	65	84	106	136	173	–	–	■■■ + ■■■ + . . .
			$M_{2,0}$	Nm	12.8	17.5	22	31.5	36	45.5	40.5	54	68	72	91	114	146	183	–	–	
			M_{2max}	Nm	42.5	57	71	100	115	144	128	171	210	225	285	355	416	368	–	–	
7.26 ... 7.52	23 ... 23.2	2.65 (3.5)	n_{2N}	rpm	300	300	250	200	200	150	150	125	100	100	75	60	50	37.5	–	–	**1F.2105-6AF..-0..0-Z**
			M_{2N}	Nm	17.6	20.5	27.5	40	42	59	53	67	87	88	122	154	195	230	–	–	■■■ + ■■■ + . . .
			$M_{2,0}$	Nm	21.5	29	37	52	59	75	66	89	112	119	149	187	240	230	–	–	
			M_{2max}	Nm	69	92	115	162	185	152	205	275	340	365	416	368	416	368	–	–	
7.64 ... 7.9	23.4 ... 23.6	4.6 (6.3)	n_{2N}	rpm	300	300	250	200	200	150	150	125	100	100	75	60	50	37.5	–	–	**1F.2106-3AF..-0..0-Z**
			M_{2N}	Nm	18.6	21.5	29	42	43.5	62	56	70	90	91	126	159	200	230	–	–	■■■ + ■■■ + . . .
			$M_{2,0}$	Nm	22.5	30.5	38.5	54	62	78	70	93	117	125	156	195	250	230	–	–	
			M_{2max}	Nm	70	94	117	165	188	152	210	280	350	370	416	368	416	365	–	–	
10 ... 10.3	31.1 ... 31.5	6 (7.6)	n_{2N}	rpm	300	250	250	200	200	150	150	125	100	100	75	60	50	–	–	–	**1F.2106-4AF..-0..0-Z**
			M_{2N}	Nm	23.5	32.5	36	51	52	75	67	83	107	106	149	189	235	–	–	–	■■■ + ■■■ + . . .
			$M_{2,0}$	Nm	30	40	50	71	81	95	91	121	152	162	200	230	260	–	–	–	
			M_{2max}	Nm	93	125	156	216	192	152	280	370	368	416	416	368	416	–	–	–	
14.3 ... 14.6	40.3 ... 40.8	8.7 (10.4)	n_{2N}	rpm	300	250	250	200	150	150	150	100	100	75	75	60	50	–	–	–	**1F.2106-6AF..-0..0-Z**
			M_{2N}	Nm	31.5	42.5	46.5	65	88	95	84	128	131	174	183	230	260	–	–	–	■■■ + ■■■ + . . .
			$M_{2,0}$	Nm	43	57	72	101	116	95	129	172	215	230	260	230	260	–	–	–	
			M_{2max}	Nm	121	162	200	216	192	152	336	416	368	416	416	368	416	–	–	–	
SIMOTICS S-1FK2 and S-1FT2 Compact servomotors with planetary gearbox NLC120 1 and 2-stage																				
0.232 ... 0.462	1.43 ... 1.64	0.2 (0.22)	n_{2N}	rpm	–	–	200	200	200	150	150	125	100	100	100	75	75	60	37.5	25	**1F.2203-2AG..-0..0-Z**
			M_{2N}	Nm	–	–	0.84	1.67	1.93	3.05	2.25	3.35	4.55	4.95	6.1	8.6	10.5	13.7	23	37	■■■ + ■■■ + . . .
			$M_{2,0}$	Nm	–	–	1.16	2.1	2.6	3.55	3.05	4.45	5.9	6.3	8.2	10.6	13.9	17.7	29	46	
			M_{2max}	Nm	–	–	7.1	10.4	12.1	15.5	13.7	18.6	23.5	25	31.5	40	51	64	104	152	
0.689 ... 1.07	3.13 ... 3.47	0.35 (0.37)	n_{2N}	rpm	375	300	300	250	250	200	200	150	150	125	125	100	75	75	50	30	**1F.2203-4AG..-0..0-Z**
			M_{2N}	Nm	1.51	2.75	3.7	5.9	6.3	9.1	7.5	10.5	11.6	14.4	17.1	22	31	34.5	52	93	■■■ + ■■■ + . . .
			$M_{2,0}$	Nm	2.05	3.15	4.25	6.4	7.5	9.7	8.6	11.8	15.1	16.2	20.5	25.5	33.5	42	68	95	
			M_{2max}	Nm	9.4	12.9	16.4	23.5	27	34	30	40.5	51	54	68	86	110	138	192	152	
1.76 ... 2.11	6.41 ... 6.68	1.23 (1.31)	n_{2N}	rpm	300	300	250	250	200	150	200	125	100	100	75	60	50	37.5	25	–	**1F.2204-5AF..-0..0-Z**
			M_{2N}	Nm	4.95	6.3	9	11	15.1	19.7	14.3	23	29	31	39.5	50	65	81	120	–	■■■ + ■■■ + . . .
			$M_{2,0}$	Nm	5.2	7.4	9.5	13.9	16	20	18	24.5	30.5	33	41.5	52	67	84	120	–	
			M_{2max}	Nm	19.2	26	32.5	46	53	66	59	79	99	106	133	166	210	265	192	–	
1.77 ... 2.13	6.41 ... 6.68	1.23 (1.31)	n_{2N}	rpm	300	300	250	250	200	200	200	150	125	125	100	75	75	60	37.5	–	**1F.2204-5AK..-0..0-Z**
			M_{2N}	Nm	5	6.5	9.1	11.3	15.4	16.7	14.6	21.5	27.5	27.5	38.5	50	58	74	120	–	■■■ + ■■■ + . . .
			$M_{2,0}$	Nm	5.3	7.4	9.6	14	16.2	20.5	18.2	24.5	31	33	41.5	52	67	84	120	–	
			M_{2max}	Nm	19.2	26	32.5	46	53	66	59	79	99	106	133	166	210	265	192	–	
2.54 ... 2.88	8.77 ... 9.03	1.61 (1.69)	n_{2N}	rpm	300	300	250	250	200	150	200	125	100	100	75	60	50	37.5	25	–	**1F.2204-6AF..-0..0-Z**
			M_{2N}	Nm	7.2	9.1	12.8	15.3	20.5	27.5	19.4	32	40.5	43.5	55	69	89	112	120	–	■■■ + ■■■ + . . .
			$M_{2,0}$	Nm	7.6	10.5	13.4	19.3	22	28	25	33.5	42	45	56	71	91	114	120	–	
			M_{2max}	Nm	26	35	44.5	62	72	90	80	107	134	143	179	220	285	355	192	–	

➥ Continued on the next page

Planetary gearbox data																	
Gearbox type:			NLC120, 1-stage						NLC120, 2-stage								
1. Order code			C41						C42								
	i		3	4	5	7	8	10	9	12	15	16	20	25	32	40	64	100
2. Order code			R03	R04	R05	R07	R08	R10	R09	R12	R15	R16	R20	R25	R32	R40	R64	R00
	$M_{2N,G}$	Nm	115	155	195	135	120	95	210	260	230	260	260	230	260	230	120	95
	$M_{2max,G}$	Nm	184	248	312	216	192	152	336	416	368	416	416	368	416	368	192	152
	$M_{2Em.Off}$	Nm	390	520	500	340	380	480	500	520	500	520	520	500	520	500	380	480
	$J_{1,G}$	kg cm²	2.49	1.91	1.76	1.49	1.43	1.39	2.33	2.26	2.23	1.77	1.59	1.58	1.42	1.42	1.42	1.38
	$\varphi_{2,G}$	'	7						9									

Color legend:		
	$M_{max,M} \times i < M_{2N,G}$	The motor and gearbox combination is fatigue-proof
	$M_{2N,G} < M_{max,M} \times i < M_{2max,G}$	Check acceleration and inertias, perform service life calculation if necessary
	$M_{max,M} \times i > M_{2max,G}$	The motor can destroy the gearbox, check acceleration and inertias, perform service life calculation if necessary

© Siemens 2022

Gearbox type NLC120

Servomotor data			Selection data servomotors with planetary gearbox																	Servomotors with planetary gearbox
$M_{0,M}$	M_{maxM}	J_M ($J_{M,Br}$)																		
Nm	Nm	kg cm²																		
SIMOTICS S-1FK2 and S-1FT2 Compact servomotors with planetary gearbox NLC120 1 and 2-stage (continued)																				
2.79	10	3.15	n_{2N}	rpm	375	300	300	250	200	150	200	125	100	100	75	60	50	37.5	25	–	**1F.2205-2AF..-0..0-Z**
...	...	(4.05)	M_{2N}	Nm	5.7	9	10.3	15.1	19.7	25.5	19.3	30	38	40	52	66	85	108	120	–	■■■ + ■■■ + . . .
3.11	10.3		$M_{2,0}$	Nm	8.3	11.5	14.7	21	24	30.5	27	36.5	45.5	49	61	77	99	124	120	–	
			M_{2max}	Nm	30	40.5	50	71	82	102	91	122	153	163	200	255	325	368	192	–	
5.01	17.1	5.1	n_{2N}	rpm	300	250	250	200	200	150	150	125	100	100	75	60	50	37.5	–	–	**1F.2205-4AF..-0..0-Z**
...	...	(6)	M_{2N}	Nm	11.4	16	18.4	27	28	40.5	37	47	61	62	86	109	139	178	–	–	■■■ + ■■■ + . . .
5.28	17.3		$M_{2,0}$	Nm	15	20	25.5	36.5	42	52	46.5	62	78	83	104	131	168	210	–	–	
			M_{2max}	Nm	51	68	86	120	138	152	154	205	255	270	340	368	416	368	–	–	
5.18	17.1	7.8	n_{2N}	rpm	375	300	250	200	200	150	200	125	100	100	75	60	50	37.5	–	–	**1F.2206-2AF..-0..0-Z**
...	...	(9.4)	M_{2N}	Nm	10.9	16.3	21.5	30.5	33.5	44.5	30	51	65	68	88	111	142	181	–	–	■■■ + ■■■ + . . .
5.45	17.3		$M_{2,0}$	Nm	15.5	21	26.5	37.5	43	54	48	64	81	86	108	135	173	215	–	–	
			M_{2max}	Nm	51	68	86	120	138	152	154	205	255	270	340	368	416	368	–	–	
10.5	34.6	15.1	n_{2N}	rpm	300	300	250	200	200	150	150	125	100	100	75	60	50	–	–	–	**1F.2206-4AF..-0..0-Z**
...	...	(16.8)	M_{2N}	Nm	24	27.5	36.5	52	53	76	68	84	109	108	152	191	240	–	–	–	■■■ + ■■■ + . . .
10.7	35		$M_{2,0}$	Nm	31	42	53	74	85	95	95	127	159	169	210	230	260	–	–	–	
			M_{2max}	Nm	104	139	174	216	192	152	310	415	368	416	416	368	416	–	–	–	
15.3	48.9	31.96	n_{2N}	rpm	300	250	200	150	125	100	100	100	75	75	50	50	–	–	–	–	**1F.2208-3AC..-0..0-Z**
...	...	(35.36)	M_{2N}	Nm	28.5	38	51	75	91	95	108	113	154	154	230	230	–	–	–	–	■■■ + ■■■ + . . .
15.5	49.6		$M_{2,0}$	Nm	45.5	61	76	108	120	95	137	183	225	240	260	230	–	–	–	–	
			M_{2max}	Nm	148	197	245	216	192	152	336	416	368	416	416	368	–	–	–	–	
19	63.4	41.16	n_{2N}	rpm	250	200	200	150	125	–	100	75	75	60	50	–	–	–	–	–	**1F.2208-4AC..-0..0-Z**
...	...	(46.76)	M_{2N}	Nm	40.5	55	59	85	105	–	124	168	170	210	255	–	–	–	–	–	■■■ + ■■■ + . . .
19.2	64.2		$M_{2,0}$	Nm	57	76	95	134	120	–	170	225	230	260	260	–	–	–	–	–	
			M_{2max}	Nm	184	248	312	216	192	–	336	416	368	416	416	–	–	–	–	–	
22.8	77	50.46	n_{2N}	rpm	250	200	200	125	125	–	100	75	60	60	–	–	–	–	–	–	**1F.2208-5AC..-0..0-Z**
...	...	(55.96)	M_{2N}	Nm	46	62	63	111	114	–	136	183	225	230	–	–	–	–	–	–	■■■ + ■■■ + . . .
23.1	77.9		$M_{2,0}$	Nm	68	91	115	135	120	–	205	260	230	260	–	–	–	–	–	–	
			M_{2max}	Nm	184	248	312	216	192	–	336	416	368	415	–	–	–	–	–	–	

Planetary gearbox data																	
Gearbox type:			NLC120, 1-stage						NLC120, 2-stage								
1. Order code			C41						C42								
	i		3	4	5	7	8	10	9	12	15	16	20	25	32	40	64	100
2. Order code			R03	R04	R05	R07	R08	R10	R09	R12	R15	R16	R20	R25	R32	R40	R64	R00
	$M_{2N,G}$	Nm	115	155	195	135	120	95	210	260	230	260	260	230	260	230	120	95
	$M_{2max,G}$	Nm	184	248	312	216	192	152	336	416	368	416	416	368	416	368	192	152
	$M_{2Em.Off}$	Nm	390	520	500	340	380	480	500	520	500	520	520	500	520	500	380	480
	$J_{1,G}$	kg cm²	2.49	1.91	1.76	1.49	1.43	1.39	2.33	2.26	2.23	1.77	1.59	1.58	1.42	1.42	1.42	1.38
	$\varphi_{2,G}$	'	7						9									

Color legend:		
	$M_{max,M} \times i < M_{2N,G}$	The motor and gearbox combination is fatigue-proof
	$M_{2N,G} < M_{max,M} \times i < M_{2max,G}$	Check acceleration and inertias, perform service life calculation if necessary
	$M_{max,M} \times i > M_{2max,G}$	The motor can destroy the gearbox, check acceleration and inertias, perform service life calculation if necessary

© Siemens 2022

Selection and ordering data

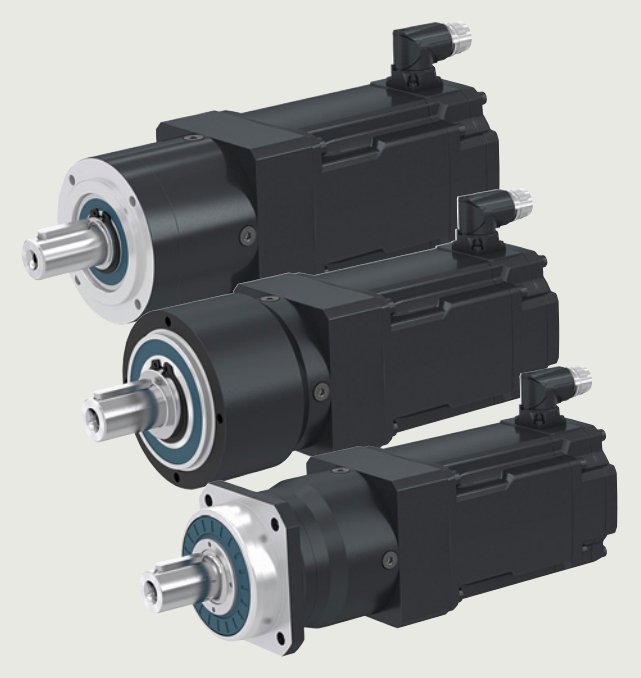

SIMOTICS S-1FK2 and S-1FT2 servo planetary geared motors

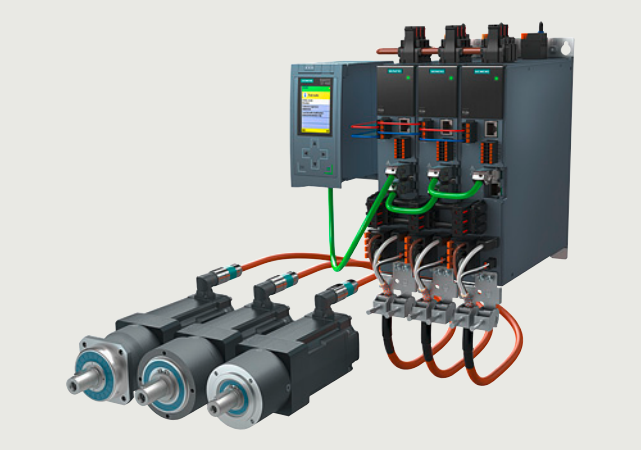

SINAMICS S210 servo converter with SIMOTICS S-1FK2 and S-1FT2 servo planetary geared motors

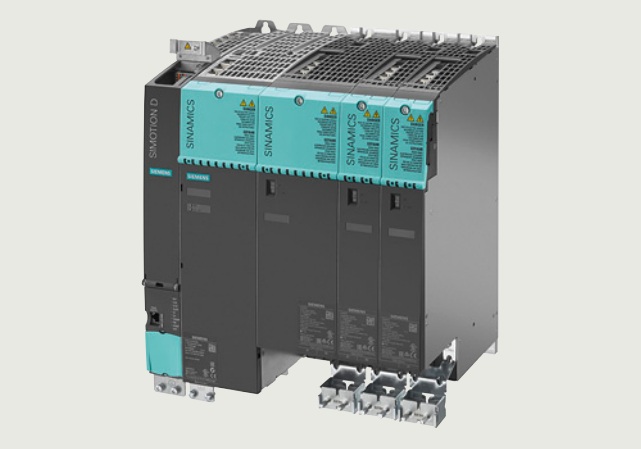

SINAMICS S120 servo converter

The following servo planetary geared motors are suitable for servo converters with line connection 380 V to 480 V 3 AC, especially for SINAMICS S120 and SINAMICS S210 servo converters.

The rated points of the geared motors are adapted to this voltage.

© Siemens 2022

Gearbox type NRB060

Selection and ordering data

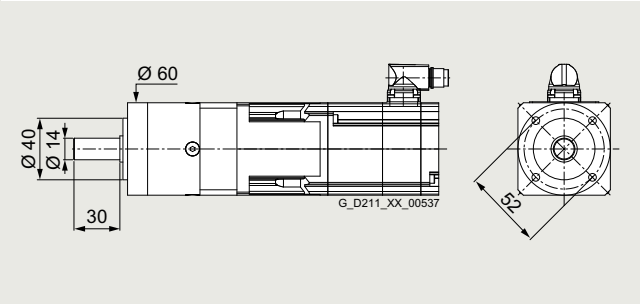

Permissible output shaft loads		
Average radial force for 20000 h	$F_{R,eq}$	400 N
Average axial force for 20000 h	$F_{A,eq}$	500 N
Average radial force for 30000 h	$F_{R,eq}$	340 N
Average axial force for 30000 h	$F_{A,eq}$	450 N
Maximum radial force	$F_{R,max}$	700 N
Maximum axial force	$F_{A,max}$	800 N

3
4

Servomotor data			Selection data servomotors with planetary gearbox																	Servomotors with planetary gearbox
$M_{0,M}$	M_{maxM}	J_M ($J_{M,Br}$)																		
Nm	Nm	kg cm²																		
SIMOTICS S-1FK2 and S-1FT2 High Dynamic servomotors with planetary gearbox NRB060 1 and 2-stage																				
1.18	3.55	0.371	n_{2N}	rpm	1000	750	600	500	375	300	375	250	200	200	150	125	100	75	50	**1F.2104-4AF..-2..0-Z**
...	...	(0.451)	M_{2N}	Nm	2.85	3.95	5	6.7	8.1	10.2	8.3	11.6	14.8	15.4	19.7	24	31	39.5	44	■■■ + ■■■ + . . .
1.2	3.63		$M_{2.0}$	Nm	3.55	4.75	5.9	8.3	9.5	11.9	10.6	14.2	17.8	19	23.5	29.5	37.5	40	44	
			M_{2max}	Nm	10.8	14.5	18.1	25	29	24	32	43	53	57	70	64	70	64	70	
2.27	7.21	0.581	n_{2N}	rpm	1000	750	600	500	375	300	300	250	200	200	150	125	100	–	–	**1F.2104-5AF..-2..0-Z**
...	...	(0.671)	M_{2N}	Nm	4.6	6.6	8.5	10.6	14	15	16	19.5	25.5	25	33.5	40	44	–	–	■■■ + ■■■ + . . .
2.3	7.32		$M_{2.0}$	Nm	6.8	9.1	11.4	16	18	15	20.5	27	34	36	44	40	44	–	–	
			M_{2max}	Nm	21.5	29	36.5	40	29	24	65	70	70	70	70	64	70	–	–	
3.01	9.63	0.781	n_{2N}	rpm	1000	750	600	500	375	–	300	250	200	200	150	125	–	–	–	**1F.2104-6AF..-2..0-Z**
...	...	(0.861)	M_{2N}	Nm	5.5	7.8	10.1	12.3	16.5	–	18.8	22.5	29.5	28.5	39	40	–	–	–	■■■ + ■■■ + . . .
3.05	9.78		$M_{2.0}$	Nm	9.1	12.1	15.2	21	18	–	27	36	44	44	44	40	–	–	–	
			M_{2max}	Nm	29	39	48.5	40	29	–	70	70	70	70	70	64	–	–	–	
4.7	14.4	1.98	n_{2N}	rpm	600	500	375	300	–	–	200	150	150	150	–	–	–	–	–	**1F.2105-4AF..-0..0-Z**
...	...	(2.82)	M_{2N}	Nm	11.3	14	18.6	23.5	–	–	32.5	43	43	41	–	–	–	–	–	■■■ + ■■■ + . . .
4.75	14.6		$M_{2.0}$	Nm	14.2	18.9	23.5	25	–	–	42	44	44	44	–	–	–	–	–	
			M_{2max}	Nm	43.5	58	64	40	–	–	70	70	70	70	–	–	–	–	–	
7.13	23.2	2.92	n_{2N}	rpm	600	500	375	–	–	–	–	–	–	–	–	–	–	–	–	**1F.2105-6AF..-0..0-Z**
...	...	(3.77)	M_{2N}	Nm	14.1	16.8	23	–	–	–	–	–	–	–	–	–	–	–	–	■■■ + ■■■ + . . .
7.25	23.5		$M_{2.0}$	Nm	21.5	28.5	36	–	–	–	–	–	–	–	–	–	–	–	–	
			M_{2max}	Nm	45	61	64	–	–	–	–	–	–	–	–	–	–	–	–	

Planetary gearbox data																	
Gearbox type:			NRB060, 1-stage						NRB060, 2-stage								NRB060, 3-stage
1. Order code			A21						A22								A23
	i		3	4	5	7	8	10	9	12	15	16	20	25	32	40	60
2. Order code			R03	R04	R05	R07	R08	R10	R09	R12	R15	R16	R20	R25	R32	R40	R60
	$M_{2N,G}$	Nm	28	38	40	25	18	15	44	44	44	44	44	40	44	40	44
	$M_{2max,G}$	Nm	45	61	64	40	29	24	70	70	70	70	70	64	70	64	70
	$M_{2Em.Off}$	Nm	66	88	80	80	80	80	88	88	88	88	88	80	88	80	88
	$J_{1,G}$	kg cm²	0.128	0.092	0.08	0.069	0.067	0.065	0.121	0.118	0.076	0.085	0.075	0.075	0.066	0.066	0.076
	$\varphi_{2,G}$	'	10						12								15

Color legend:		
	$M_{max,M} \times i < M_{2N,G}$	The motor and gearbox combination is fatigue-proof
	$M_{2N,G} < M_{max,M} \times i < M_{2max,G}$	Check acceleration and inertias, perform service life calculation if necessary
	$M_{max,M} \times i > M_{2max,G}$	The motor can destroy the gearbox, check acceleration and inertias, perform service life calculation if necessary

© Siemens 2022

Servomotor data			Selection data servomotors with planetary gearbox																	Servomotors with planetary gearbox
$M_{0,M}$	M_{maxM}	J_M ($J_{M,Br}$)																		
Nm	Nm	kg cm²																		
SIMOTICS S-1FK2 and S-1FT2 Compact servomotors with planetary gearbox NRB060 1 and 2-stage																				
2.23	6.81	1.251	n_{2N}	rpm	750	600	600	375	375	300	300	200	200	150	150	125	100	–	–	**1F.2204-5AF..-2..0-Z**
...	...	(1.331)	M_{2N}	Nm	5.4	7.1	7.4	12.2	12.3	15	14.6	21.5	22.5	29	30	35.5	44	–	–	■■■ + ■■■ + . . .
2.26	6.91		$M_{2,0}$	Nm	6.7	9	11.2	15.7	18	15	20	26.5	33.5	35.5	44	40	44	–	–	
			M_{2max}	Nm	20.5	27.5	34.5	40	29	24	61	70	70	70	70	64	70	–	–	
2.25	6.81	1.251	n_{2N}	rpm	750	600	600	375	375	300	300	200	200	150	150	125	100	–	–	**1F.2204-5AK..-2..0-Z**
...	...	(1.331)	M_{2N}	Nm	5.5	7.3	7.5	12.4	12.6	15	14.8	22	23	29.5	30.5	36.5	44	–	–	■■■ + ■■■ + . . .
2.27	6.91		$M_{2,0}$	Nm	6.8	9	11.3	15.8	18	15	20	27	33.5	35.5	44	40	44	–	–	
			M_{2max}	Nm	20.5	27.5	34.5	40	29	24	61	70	70	70	70	64	70	–	–	
3	9.14	1.631	n_{2N}	rpm	750	600	500	375	375	–	300	200	200	150	150	125	–	–	–	**1F.2204-6AF..-2..0-Z**
...	...	(1.711)	M_{2N}	Nm	7.1	9.4	11.6	15.8	15.8	–	18.3	27	28	37	37	40	–	–	–	■■■ + ■■■ + . . .
3.03	9.27		$M_{2,0}$	Nm	9	12.1	15.1	21	18	–	27	36	44	44	44	40	–	–	–	
			M_{2max}	Nm	27.5	37	46	40	29	–	70	70	70	70	70	64	–	–	–	
2.85	10.4	3.42	n_{2N}	rpm	600	500	375	300	300	–	250	200	150	125	100	–	–	–	–	**1F.2205-2AF..-0..0-Z**
...	...	(4.32)	M_{2N}	Nm	7.4	9.3	12.4	16	15.8	–	18.2	22	31	37	44	–	–	–	–	■■■ + ■■■ + . . .
2.9	10.5		$M_{2,0}$	Nm	8.7	11.6	14.5	20	18	–	25.5	34	42.5	44	44	–	–	–	–	
			M_{2max}	Nm	31.5	41.5	52	40	29	–	70	70	70	70	70	–	–	–	–	
4.86	17.3	5.37	n_{2N}	rpm	600	500	375	250	–	–	200	150	–	–	–	–	–	–	–	**1F.2205-4AF..-0..0-Z**
...	...	(6.27)	M_{2N}	Nm	9.6	11.5	15.8	23.5	–	–	28	37.5	–	–	–	–	–	–	–	■■■ + ■■■ + . . .
4.95	17.6		$M_{2,0}$	Nm	14.8	19.8	24.5	25	–	–	43.5	44	–	–	–	–	–	–	–	
			M_{2max}	Nm	45	61	64	40	–	–	70	70	–	–	–	–	–	–	–	

Planetary gearbox data																
Gearbox type:			NRB060, 1-stage						NRB060, 2-stage								NRB060, 3-stage
1. Order code			A21						A22								A23
	i		3	4	5	7	8	10	9	12	15	16	20	25	32	40	60
2. Order code			R03	R04	R05	R07	R08	R10	R09	R12	R15	R16	R20	R25	R32	R40	R60
	$M_{2N,G}$	Nm	28	38	40	25	18	15	44	44	44	44	44	40	44	40	44
	$M_{2max,G}$	Nm	45	61	64	40	29	24	70	70	70	70	70	64	70	64	70
	$M_{2Em.Off}$	Nm	66	88	80	80	80	80	88	88	88	88	88	80	88	80	88
	$J_{1,G}$	kg cm²	0.128	0.092	0.08	0.069	0.067	0.065	0.121	0.118	0.076	0.085	0.075	0.075	0.066	0.066	0.076
	$\varphi_{2,G}$	'	10						12								15

Color legend:		
	$M_{max,M} \times i < M_{2N,G}$	The motor and gearbox combination is fatigue-proof
	$M_{2N,G} < M_{max,M} \times i < M_{2max,G}$	Check acceleration and inertias, perform service life calculation if necessary
	$M_{max,M} \times i > M_{2max,G}$	The motor can destroy the gearbox, check acceleration and inertias, perform service life calculation if necessary

© Siemens 2022

SIMOTICS S-1FK2 and S-1FT2 servo planetary geared motors
for servo converters with line connection 400 V 3 AC

Gearbox type NRB080

Selection and ordering data

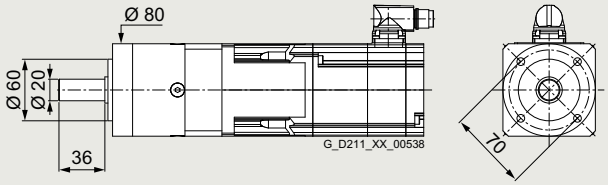

Permissible output shaft loads		
Average radial force for 20000 h	$F_{R,eq}$	750 N
Average axial force for 20000 h	$F_{A,eq}$	1000 N
Average radial force for 30000 h	$F_{R,eq}$	650 N
Average axial force for 30000 h	$F_{A,eq}$	900 N
Maximum radial force	$F_{R,max}$	1250 N
Maximum axial force	$F_{A,max}$	1600 N

3 4

Servomotor data $M_{0,M}$ Nm	M_{maxM} Nm	J_M ($J_{M,Br}$) kg cm²	Selection data servomotors with planetary gearbox																	Servomotors with planetary gearbox
SIMOTICS S-1FK2 and S-1FT2 High Dynamic servomotors with planetary gearbox NRB080 1 and 2-stage																				
1.14 ... 1.16	3.5 ... 3.59	0.35 (0.43)	n_{2N}	rpm	1000	750	600	500	375	300	375	250	200	200	150	125	100	75	50	1F.2104-4AF..-2..0-Z
			M_{2N}	Nm	2.55	3.6	4.7	6.4	7.9	10	7.8	11.2	14	14.5	19.1	23.5	30.5	39	50	■■■ + ■■■ + . . .
			M_{2_0}	Nm	3.4	4.55	5.7	8.1	9.2	11.6	10.3	13.8	17.3	18.4	23	28.5	36.5	46	50	
			M_{2max}	Nm	10.7	14.3	17.9	25	28.5	35.5	32	42.5	53	56	71	88	113	141	80	
2.21 ... 2.26	7.08 ... 7.27	0.56 (0.65)	n_{2N}	rpm	750	600	500	375	375	300	300	250	200	200	150	125	100	75	–	1F.2104-5AF..-2..0-Z
			M_{2N}	Nm	5.9	7.7	9.8	14	14.6	18.6	17	20	25.5	24.5	35.5	42	56	74	–	■■■ + ■■■ + . . .
			M_{2_0}	Nm	6.7	9	11.2	15.8	18	22.5	20	26.5	33.5	35.5	44.5	55	71	89	–	
			M_{2max}	Nm	21.5	29	36	50	58	61	64	86	107	114	143	176	192	176	–	
2.95 ... 3.01	9.49 ... 9.73	0.76 (0.84)	n_{2N}	rpm	750	600	500	375	375	300	300	200	200	150	150	125	100	75	–	1F.2104-6AF..-2..0-Z
			M_{2N}	Nm	7.1	9.3	11.8	16.8	17.3	22	20	29.5	29.5	39.5	41	48.5	64	86	–	■■■ + ■■■ + . . .
			M_{2_0}	Nm	8.9	12	15	21	24	30	26.5	35.5	44.5	47.5	59	74	95	110	–	
			M_{2max}	Nm	29	38.5	48.5	68	77	61	86	115	144	153	192	176	192	176	–	
4.68 ... 4.74	14.4 ... 14.6	1.71 (2.55)	n_{2N}	rpm	750	600	500	375	300	250	250	200	150	150	125	100	75	75	–	1F.2105-4AF..-0..0-Z
			M_{2N}	Nm	11	14	17.4	24	30.5	37	33.5	42.5	56	56	68	85	117	108	–	■■■ + ■■■ + . . .
			M_{2_0}	Nm	14.1	18.9	23.5	33	37.5	38	42	56	70	74	93	110	120	110	–	
			M_{2max}	Nm	43.5	58	73	102	80	61	130	173	176	192	192	176	192	176	–	
7.32 ... 7.5	23.1 ... 23.5	2.65 (3.5)	n_{2N}	rpm	600	500	375	300	250	–	200	150	125	125	100	100	–	–	–	1F.2105-6AF..-0..0-Z
			M_{2N}	Nm	17.3	21	28	37	44	–	51	67	81	80	101	94	–	–	–	■■■ + ■■■ + . . .
			M_{2_0}	Nm	22.5	29.5	37	52	50	–	66	88	110	117	120	110	–	–	–	
			M_{2max}	Nm	70	93	117	104	80	–	208	192	176	192	192	176	–	–	–	
7.41 ... 7.57	23.5 ... 23.8	5.472 (7.172)	n_{2N}	rpm	500	375	300	250	200	–	150	125	100	100	75	–	–	–	–	1F.2106-3AF..-0..0-Z
			M_{2N}	Nm	17.2	23	29	35.5	45	–	56	68	84	83	111	–	–	–	–	■■■ + ■■■ + . . .
			M_{2_0}	Nm	22.5	30	37.5	52	50	–	66	89	110	119	120	–	–	–	–	
			M_{2max}	Nm	71	95	118	104	80	–	208	192	176	192	192	–	–	–	–	

Planetary gearbox data																
Gearbox type:			NRB080, 1-stage						NRB080, 2-stage							
1. Order code			A31						A32							
i			3	4	5	7	8	10	9	12	15	16	20	25	32	40	64
2. Order code			R03	R04	R05	R07	R08	R10	R09	R12	R15	R16	R20	R25	R32	R40	R64
$M_{2N,G}$		Nm	85	115	110	65	50	38	130	120	110	120	120	110	120	110	50
$M_{2max,G}$		Nm	136	184	176	104	80	61	208	192	176	192	192	176	192	176	80
$M_{2Em.Off}$		Nm	180	240	220	178	190	200	260	240	220	240	240	220	240	220	190
$J_{1,G}$		kg cm²	0.654	0.455	0.423	0.379	0.37	0.359	0.613	0.589	0.586	0.446	0.406	0.404	0.366	0.365	0.366
$\varphi_{2,G}$		'	7						9								

Color legend:		
	$M_{max,M} \times i < M_{2N,G}$	The motor and gearbox combination is fatigue-proof
	$M_{2N,G} < M_{max,M} \times i < M_{2max,G}$	Check acceleration and inertias, perform service life calculation if necessary
	$M_{max,M} \times i > M_{2max,G}$	The motor can destroy the gearbox, check acceleration and inertias, perform service life calculation if necessary

© Siemens 2022

Servomotor data $M_{0,M}$ Nm	M_{maxM} Nm	J_M ($J_{M,Br}$) kg cm²	Selection data servomotors with planetary gearbox																	Servomotors with planetary gearbox
SIMOTICS S-1FK2 and S-1FT2 Compact servomotors with planetary gearbox NRB080 1 and 2-stage																				
2.17 ... 2.22	6.68 ... 6.86	1.23 (1.31)	n_{2N}	rpm	750	600	500	375	375	300	300	250	200	150	150	100	100	75	–	**1F.2204-5AF..-2..0-Z**
			M_{2N}	Nm	5.5	7.1	9.1	12.9	12.9	16.6	15.7	18	22.5	29.5	32	46	50	67	–	■■■ + ■■■ + . . .
			$M_{2,0}$	Nm	6.6	8.8	11	15.5	17.7	22	19.8	26	33	35	43.5	54	70	87	–	
			M_{2max}	Nm	20.5	27	34	47.5	54	61	61	81	101	108	135	169	192	176	–	
2.18 ... 2.23	6.68 ... 6.86	1.23 (1.31)	n_{2N}	rpm	750	600	500	375	375	300	300	200	200	150	150	100	100	75	–	**1F.2204-5AK..-2..0-Z**
			M_{2N}	Nm	5.6	7.3	9.3	13.2	13.2	16.9	15.9	23	23	30.5	32.5	47.5	50	68	–	■■■ + ■■■ + . . .
			$M_{2,0}$	Nm	6.6	8.8	11.1	15.6	17.8	22	19.9	26.5	33	35	44	55	70	88	–	
			M_{2max}	Nm	20.5	27	34	47.5	54	61	61	81	101	108	135	169	192	176	–	
2.93 ... 3	9 ... 9.22	1.61 (1.69)	n_{2N}	rpm	750	600	500	375	300	250	250	200	150	150	125	100	75	75	–	**1F.2204-6AF..-2..0-Z**
			M_{2N}	Nm	7.3	9.5	12	17	21	25.5	24	30	40	40	49.5	61	84	84	–	■■■ + ■■■ + . . .
			$M_{2,0}$	Nm	8.9	11.9	14.9	20.5	23.5	29.5	26.5	35.5	44.5	47	59	74	94	110	–	
			M_{2max}	Nm	27.5	36.5	46	64	73	61	82	109	136	145	181	176	192	176	–	
2.89 ... 3.02	10.2 ... 10.5	3.15 (4.05)	n_{2N}	rpm	750	600	500	375	375	250	300	200	200	150	125	100	100	75	–	**1F.2205-2AF..-0..0-Z**
			M_{2N}	Nm	7.2	9.3	11.7	16.6	15.9	24.5	19.7	28.5	27	38	47	59	59	81	–	■■■ + ■■■ + . . .
			$M_{2,0}$	Nm	9	12	15	21	24	30	26.5	35	44	47	59	73	94	110	–	
			M_{2max}	Nm	31	41.5	52	73	80	61	93	124	155	165	192	176	192	176	–	
5.01 ... 5.12	17.3 ... 17.5	5.1 (6)	n_{2N}	rpm	600	500	375	300	250	250	250	150	125	125	100	75	75	–	–	**1F.2205-4AF..-0..0-Z**
			M_{2N}	Nm	11.7	14.4	19.7	25.5	31	30.5	29.5	49	59	59	75	98	100	–	–	■■■ + ■■■ + . . .
			$M_{2,0}$	Nm	15.3	20	25.5	35.5	40.5	38	45	60	75	80	100	110	120	–	–	
			M_{2max}	Nm	52	70	87	104	80	61	156	192	176	192	192	176	192	–	–	
5.15 ... 5.26	17.2 ... 17.5	8.672 (10.272)	n_{2N}	rpm	500	375	300	250	200	–	200	150	100	100	75	–	–	–	–	**1F.2206-2AF..-0..0-Z**
			M_{2N}	Nm	12.9	17.3	21.5	27.5	34	–	33.5	44	63	66	84	–	–	–	–	■■■ + ■■■ + . . .
			$M_{2,0}$	Nm	15.7	21	26	36.5	42	–	46.5	61	77	82	103	–	–	–	–	
			M_{2max}	Nm	52	69	87	104	80	–	155	192	176	192	192	–	–	–	–	
10 ... 10.3	34.6 ... 35.2	15.972 (17.672)	n_{2N}	rpm	500	375	300	200	200	–	150	125	100	100	75	–	–	–	–	**1F.2206-4AF..-0..0-Z**
			M_{2N}	Nm	21	28	35.5	53	50	–	67	79	98	95	120	–	–	–	–	■■■ + ■■■ + . . .
			$M_{2,0}$	Nm	30.5	41	51	65	50	–	90	120	110	120	120	–	–	–	–	
			M_{2max}	Nm	105	140	175	104	79	–	208	192	176	192	191	–	–	–	–	

Planetary gearbox data																
Gearbox type:		**NRB080, 1-stage**						**NRB080, 2-stage**								
1. Order code		**A31**						**A32**								
i		**3**	**4**	**5**	**7**	**8**	**10**	**9**	**12**	**15**	**16**	**20**	**25**	**32**	**40**	**64**
2. Order code		**R03**	**R04**	**R05**	**R07**	**R08**	**R10**	**R09**	**R12**	**R15**	**R16**	**R20**	**R25**	**R32**	**R40**	**R64**
$M_{2N,G}$	Nm	85	115	110	65	50	38	130	120	110	120	120	110	120	110	50
$M_{2max,G}$	Nm	136	184	176	104	80	61	208	192	176	192	192	176	192	176	80
$M_{2Em.Off}$	Nm	180	240	220	178	190	200	260	240	220	240	240	220	240	220	190
$J_{1,G}$	kg cm²	0.654	0.455	0.423	0.379	0.37	0.359	0.613	0.589	0.586	0.446	0.406	0.404	0.366	0.365	0.366
$\varphi_{2,G}$	'	7						9								

Color legend:		
	$M_{max,M} \times i < M_{2N,G}$	The motor and gearbox combination is fatigue-proof
	$M_{2N,G} < M_{max,M} \times i < M_{2max,G}$	Check acceleration and inertias, perform service life calculation if necessary
	$M_{max,M} \times i > M_{2max,G}$	The motor can destroy the gearbox, check acceleration and inertias, perform service life calculation if necessary

© Siemens 2022

Gearbox type NRB080

Servomotor data $M_{0,M}$ Nm	$M_{max,M}$ Nm	J_M ($J_{M,Br}$) kg cm²	Selection data servomotors with planetary gearbox							Servomotors with planetary gearbox
SIMOTICS S-1FK2 and S-1FT2 High Dynamic servomotors with planetary gearbox NRB080 3-stage										
1.14 ... 1.16	3.5 ... 3.59	0.35 (0.43)	n_{2N}	rpm	50	37.5	30	25	20	1F.2104-4AF..-2..0-Z ■■■ + ■■■ + . . .
			M_{2N}	Nm	55	74	93	110	120	
			$M_{2,0}$	Nm	68	91	114	110	120	
			M_{2max}	Nm	176	192	192	176	192	
2.21 ... 2.26	7.08 ... 7.27	0.56 (0.65)	n_{2N}	rpm	50	37.5	30	–	–	1F.2104-5AF..-2..0-Z ■■■ + ■■■ + . . .
			M_{2N}	Nm	101	120	120	–	–	
			$M_{2,0}$	Nm	110	120	120	–	–	
			M_{2max}	Nm	176	192	192	–	–	
2.95 ... 3.01	9.49 ... 9.73	0.76 (0.84)	n_{2N}	rpm	50	–	–	–	–	1F.2104-6AF..-2..0-Z ■■■ + ■■■ + . . .
			M_{2N}	Nm	110	–	–	–	–	
			$M_{2,0}$	Nm	110	–	–	–	–	
			M_{2max}	Nm	176	–	–	–	–	
SIMOTICS S-1FK2 and S-1FT2 Compact servomotors with planetary gearbox NRB080 3-stage										
2.17 ... 2.22	6.68 ... 6.86	1.23 (1.31)	n_{2N}	rpm	50	37.5	30	–	–	1F.2204-5AF..-2..0-Z ■■■ + ■■■ + . . .
			M_{2N}	Nm	91	120	120	–	–	
			$M_{2,0}$	Nm	110	120	120	–	–	
			M_{2max}	Nm	176	192	192	–	–	
2.18 ... 2.23	6.68 ... 6.86	1.23 (1.31)	n_{2N}	rpm	50	37.5	37.5	–	–	1F.2204-5AK..-2..0-Z ■■■ + ■■■ + . . .
			M_{2N}	Nm	93	120	100	–	–	
			$M_{2,0}$	Nm	110	120	120	–	–	
			M_{2max}	Nm	176	192	192	–	–	
2.93 ... 3	9 ... 9.22	1.61 (1.69)	n_{2N}	rpm	50	–	–	–	–	1F.2204-6AF..-2..0-Z ■■■ + ■■■ + . . .
			M_{2N}	Nm	109	–	–	–	–	
			$M_{2,0}$	Nm	110	–	–	–	–	
			M_{2max}	Nm	176	–	–	–	–	
2.89 ... 3.02	10.2 ... 10.5	3.15 (4.05)	n_{2N}	rpm	50	–	–	–	–	1F.2205-2AF..-0..0-Z ■■■ + ■■■ + . . .
			M_{2N}	Nm	107	–	–	–	–	
			$M_{2,0}$	Nm	110	–	–	–	–	
			M_{2max}	Nm	176	–	–	–	–	

Planetary gearbox data							
Gearbox type:			NRB080, 3-stage				
1. Order code			A33				
i			60	80	100	120	160
2. Order code			R60	R80	R01	R21	R61
$M_{2N,G}$		Nm	110	120	120	110	120
$M_{2max,G}$		Nm	176	192	192	176	192
$M_{2Em.Off}$		Nm	220	240	240	220	240
$J_{1,G}$		kg cm²	0.584	0.405	0.404	0.59	0.365
$\varphi_{2,G}$		'	11				

Color legend:		
	$M_{max,M} \times i < M_{2N,G}$	The motor and gearbox combination is fatigue-proof
	$M_{2N,G} < M_{max,M} \times i < M_{2max,G}$	Check acceleration and inertias, perform service life calculation if necessary
	$M_{max,M} \times i > M_{2max,G}$	The motor can destroy the gearbox, check acceleration and inertias, perform service life calculation if necessary

© Siemens 2022

Selection and ordering data

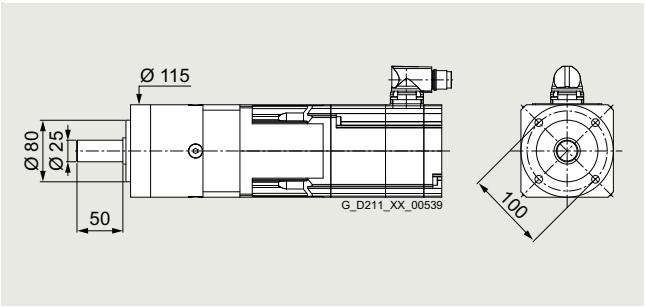

Permissible output shaft loads		
Average radial force for 20000 h	$F_{R,eq}$	1750 N
Average axial force for 20000 h	$F_{A,eq}$	2500 N
Average radial force for 30000 h	$F_{R,eq}$	1500 N
Average axial force for 30000 h	$F_{A,eq}$	2100 N
Maximum radial force	$F_{R,max}$	2000 N
Maximum axial force	$F_{A,max}$	3800 N

Servomotor data			Selection data servomotors with planetary gearbox																	Servomotors with planetary gearbox
$M_{0,M}$	M_{maxM}	J_M ($J_{M,Br}$)																		
Nm	Nm	kg cm²																		
SIMOTICS S-1FK2 and S-1FT2 High Dynamic servomotors with planetary gearbox NRB120 1 and 2-stage																				
1.03	3.43	0.35 (0.43)	n_{2N}	rpm	750	600	500	375	375	300	300	200	150	150	150	125	100	75	50	**1F.2104-4AF..-0..0-Z**
...	...		M_{2N}	Nm	2.2	3.2	4.35	6.5	7.1	9.2	7	10.6	13.9	14.7	17.1	21	28.5	37.5	58	■■■ + ■■■ + . . .
1.09	3.51		M_{2_0}	Nm	3.05	4.15	5.3	7.5	8.6	10.8	9.6	12.9	16.2	17.2	21.5	27	34.5	43	69	
			M_{2max}	Nm	10.4	13.9	17.4	24.5	28	35	31	41.5	52	55	69	86	111	139	192	
2.13	7.01	0.56 (0.65)	n_{2N}	rpm	600	500	500	375	300	250	250	200	150	150	125	100	75	75	50	**1F.2104-5AF..-0..0-Z**
...	...		M_{2N}	Nm	5.9	7.7	8.2	12.6	16.4	20.5	17.1	21	29.5	30	38.5	49	67	69	101	■■■ + ■■■ + . . .
2.18	7.19		M_{2_0}	Nm	6.4	8.6	10.8	15.2	17.4	21.5	19.4	25.5	32.5	34.5	43	54	69	86	120	
			M_{2max}	Nm	21	28.5	35.5	50	57	71	64	85	106	113	142	177	225	280	192	
2.87	9.39	0.76 (0.84)	n_{2N}	rpm	600	500	375	375	300	250	250	200	150	150	125	100	75	60	50	**1F.2104-6AF..-0..0-Z**
...	...		M_{2N}	Nm	7.3	9.5	13.6	15.3	19.8	24.5	20.5	25.5	35	35.5	46	58	83	104	117	■■■ + ■■■ + . . .
2.93	9.64		M_{2_0}	Nm	8.6	11.6	14.5	20	23	29	26	34.5	43.5	46.5	58	72	93	116	120	
			M_{2max}	Nm	28.5	38	48	67	77	96	85	114	143	152	190	235	300	368	192	
4.56	14.1	1.71 (2.55)	n_{2N}	rpm	600	500	375	300	300	250	250	150	150	125	100	100	75	60	–	**1F.2105-4AF..-0..0-Z**
...	...		M_{2N}	Nm	11.9	15	21	29	29.5	36.5	30.5	50	52	64	82	82	120	150	–	■■■ + ■■■ + . . .
4.66	14.5		M_{2_0}	Nm	13.8	18.5	23	32.5	37	46.5	41.5	55	69	73	92	115	147	184	–	
			M_{2max}	Nm	43.5	58	72	101	116	145	129	172	215	225	285	355	416	368	–	
7.46	22.8	2.65 (3.5)	n_{2N}	rpm	500	375	375	300	250	200	200	150	125	125	100	75	60	50	–	**1F.2105-6AF..-0..0-Z**
...	...		M_{2N}	Nm	18.8	25.5	27.5	37	45	57	51	68	81	81	106	141	184	220	–	■■■ + ■■■ + . . .
7.62	23.4		M_{2_0}	Nm	22.5	30	38	53	60	76	68	90	113	120	150	188	240	230	–	
			M_{2max}	Nm	70	93	116	163	186	152	205	275	345	365	416	368	416	368	–	
7.95	23.4	4.6 (6.3)	n_{2N}	rpm	500	375	375	300	250	200	200	150	125	100	100	75	60	50	–	**1F.2106-3AF..-0..0-Z**
...	...		M_{2N}	Nm	19.4	26.5	28.5	38	46.5	59	52	70	84	103	109	145	189	225	–	■■■ + ■■■ + . . .
8.1	23.8		M_{2_0}	Nm	24	32	40	56	64	81	71	95	119	127	159	198	255	230	–	
			M_{2max}	Nm	71	95	118	166	189	152	210	280	350	375	416	368	416	365	–	
10.3	31.1	6 (7.6)	n_{2N}	rpm	500	375	375	250	250	200	200	125	100	100	75	75	60	–	–	**1F.2106-4AF..-0..0-Z**
...	...		M_{2N}	Nm	23.5	32.5	33.5	53	53	68	60	97	121	123	163	165	210	–	–	■■■ + ■■■ + . . .
10.5	31.6		M_{2_0}	Nm	31.5	42	52	73	84	95	93	124	155	165	205	230	260	–	–	
			M_{2max}	Nm	94	126	157	216	192	152	280	370	368	416	416	368	416	–	–	

➥ Continued on the next page

Planetary gearbox data																
Gearbox type:			NRB120, 1-stage						NRB120, 2-stage							
1. Order code			A41						A42							
	i		3	4	5	7	8	10	9	12	15	16	20	25	32	40	64
2. Order code			R03	R04	R05	R07	R08	R10	R09	R12	R15	R16	R20	R25	R32	R40	R64
	$M_{2N,G}$	Nm	115	155	195	135	120	95	210	260	230	260	260	230	260	230	120
	$M_{2max,G}$	Nm	184	248	312	216	192	152	336	416	368	416	416	368	416	368	192
	$M_{2Em.Off}$	Nm	390	520	500	340	380	480	500	520	500	520	520	500	520	500	380
	$J_{1,G}$	kg cm²	2.36	1.84	1.63	1.46	1.43	1.38	2.29	2.22	2.2	1.75	1.57	1.57	1.42	1.42	1.41
	$\varphi_{2,G}$	'	7						9								

Color legend:		
	$M_{max,M} \times i < M_{2N,G}$	**The motor and gearbox combination is fatigue-proof**
	$M_{2N,G} < M_{max,M} \times i < M_{2max,G}$	**Check acceleration and inertias, perform service life calculation if necessary**
	$M_{max,M} \times i > M_{2max,G}$	**The motor can destroy the gearbox, check acceleration and inertias, perform service life calculation if necessary**

© Siemens 2022

SIMOTICS S-1FK2 and S-1FT2 servo planetary geared motors

for servo converters with line connection 400 V 3 AC

Gearbox type NRB120

Servomotor data $M_{0,M}$ Nm	M_{maxM} Nm	J_M ($J_{M,Br}$) kg cm²	Selection data servomotors with planetary gearbox																	Servomotors with planetary gearbox
SIMOTICS S-1FK2 and S-1FT2 High Dynamic servomotors with planetary gearbox NRB120 1 and 2-stage (continued)																				
14.6 ... 14.9	40.3 ... 41	8.7 (10.4)	n_{2N}	rpm	500	375	300	250	200	200	150	125	100	100	75	75	60	–	–	**1F.2106-6AF..-0..0-Z**
			M_{2N}	Nm	31	42	54	69	85	87	101	122	151	152	200	199	255	–	–	■■■ + ■■■ + . . .
			$M_{2,0}$	Nm	44.5	59	74	104	119	95	131	175	215	230	260	230	260	–	–	
			M_{2max}	Nm	122	163	200	216	192	152	336	416	368	416	416	368	416	–	–	
SIMOTICS S-1FK2 and S-1FT2 Compact servomotors with planetary gearbox NRB120 1 and 2-stage																				
2.09 ... 2.14	6.61 ... 6.78	1.23 (1.31)	n_{2N}	rpm	600	500	375	375	300	250	250	200	150	150	125	100	75	60	37.5	**1F.2204-5AF..-0..0-Z**
			M_{2N}	Nm	5.6	7.3	10	11.4	15.2	18.9	15.9	19.5	27.5	27.5	36	45	63	79	120	■■■ + ■■■ + . . .
			$M_{2,0}$	Nm	6.2	8.4	10.6	14.9	17	21	19	25	31.5	34	42.5	53	68	85	120	
			M_{2max}	Nm	20	27	33.5	47	54	67	60	80	100	107	134	167	210	265	192	
2.11 ... 2.16	6.61 ... 6.78	1.23 (1.31)	n_{2N}	rpm	600	500	375	375	300	250	250	200	150	150	125	100	75	60	37.5	**1F.2204-5AK..-0..0-Z**
			M_{2N}	Nm	5.7	7.4	10.1	11.7	15.6	19.4	16.3	20	28	28	36.5	46	65	82	120	■■■ + ■■■ + . . .
			$M_{2,0}$	Nm	6.3	8.4	10.6	15	17.2	21.5	19.2	25.5	32	34	42.5	53	68	85	120	
			M_{2max}	Nm	20	27	33.5	47	54	67	60	80	100	107	134	167	210	265	192	
2.86 ... 2.92	8.9 ... 9.13	1.61 (1.69)	n_{2N}	rpm	600	500	375	300	300	250	250	200	150	125	100	100	75	60	50	**1F.2204-6AF..-0..0-Z**
			M_{2N}	Nm	7.8	10	13.9	19.7	20.5	25	21	25.5	36.5	44	55	59	86	108	111	■■■ + ■■■ + . . .
			$M_{2,0}$	Nm	8.6	11.5	14.4	20	23	29	26	34.5	43	46	57	72	92	115	120	
			M_{2max}	Nm	27	36	45.5	63	73	91	81	108	135	144	180	225	285	360	192	
3.12 ... 3.23	10.1 ... 10.4	3.15 (4.05)	n_{2N}	rpm	600	500	375	300	300	250	250	200	150	150	125	100	75	60	50	**1F.2205-2AF..-0..0-Z**
			M_{2N}	Nm	7.4	9.7	13.1	18.3	19.6	24	20.5	24.5	35.5	35	45	57	80	101	100	■■■ + ■■■ + . . .
			$M_{2,0}$	Nm	9.5	12.7	16	22.5	25.5	32	28.5	38	47.5	50	63	79	101	127	120	
			M_{2max}	Nm	31	41.5	51	72	83	103	92	123	154	164	205	255	325	368	192	
5.27 ... 5.46	17 ... 17.4	5.1 (6)	n_{2N}	rpm	500	375	375	300	250	200	200	150	125	125	100	75	60	50	–	**1F.2205-4AF..-0..0-Z**
			M_{2N}	Nm	12.6	17.5	19.1	25.5	31	40	35.5	48	57	58	76	101	132	159	–	■■■ + ■■■ + . . .
			$M_{2,0}$	Nm	16.2	21.5	27	38	43.5	54	48	64	80	85	107	134	171	210	–	
			M_{2max}	Nm	52	69	87	121	139	152	155	205	255	275	340	368	416	368	–	
5.52 ... 5.62	17.2 ... 17.4	7.8 (9.4)	n_{2N}	rpm	600	500	375	300	250	200	200	150	125	125	100	75	75	60	–	**1F.2206-2AF..-0..0-Z**
			M_{2N}	Nm	12.2	15	21.5	29	35	44	39	52	64	66	84	108	115	143	–	■■■ + ■■■ + . . .
			$M_{2,0}$	Nm	16.7	22	27.5	39	44.5	56	49.5	66	82	88	110	138	176	220	–	
			M_{2max}	Nm	52	69	87	121	139	152	155	205	255	275	340	368	416	368	–	
10.8 ... 11	34.6 ... 35.2	15.1 (16.8)	n_{2N}	rpm	500	375	375	250	250	200	200	125	100	100	75	75	60	–	–	**1F.2206-4AF..-0..0-Z**
			M_{2N}	Nm	24	33	34	54	54	70	62	99	123	125	167	168	215	–	–	■■■ + ■■■ + . . .
			$M_{2,0}$	Nm	32.5	43.5	54	76	87	95	97	129	162	172	215	230	260	–	–	
			M_{2max}	Nm	105	140	175	216	192	152	310	416	368	416	416	368	416	–	–	
15.5 ... 15.8	49 ... 49.8	31.96 (35.36)	n_{2N}	rpm	375	300	250	200	150	150	150	100	75	75	60	60	–	–	–	**1F.2208-3AC..-0..0-Z**
			M_{2N}	Nm	34.5	44	54	70	92	93	87	130	170	172	215	205	–	–	–	■■■ + ■■■ + . . .
			$M_{2,0}$	Nm	47	63	79	110	120	95	140	186	230	245	260	230	–	–	–	
			M_{2max}	Nm	149	198	245	216	192	152	336	416	368	416	416	368	–	–	–	
19.3 ... 19.7	63.5 ... 64.5	41.16 (46.76)	n_{2N}	rpm	375	300	250	150	150	–	125	100	75	75	60	–	–	–	–	**1F.2208-4AC..-0..0-Z**
			M_{2N}	Nm	39.5	49.5	60	101	104	–	116	142	190	189	235	–	–	–	–	■■■ + ■■■ + . . .
			$M_{2,0}$	Nm	58	78	98	135	120	–	174	230	230	260	260	–	–	–	–	
			M_{2max}	Nm	184	248	312	216	192	–	336	416	368	416	416	–	–	–	–	

➥ Continued on the next page

Planetary gearbox data																
Gearbox type:			**NRB120, 1-stage**						**NRB120, 2-stage**							
1. Order code			**A41**						**A42**							
	i		**3**	**4**	**5**	**7**	**8**	**10**	**9**	**12**	**15**	**16**	**20**	**25**	**32**	**40**	**64**
2. Order code			**R03**	**R04**	**R05**	**R07**	**R08**	**R10**	**R09**	**R12**	**R15**	**R16**	**R20**	**R25**	**R32**	**R40**	**R64**
	$M_{2N,G}$	Nm	115	155	195	135	120	95	210	260	230	260	260	230	260	230	120
	$M_{2max,G}$	Nm	184	248	312	216	192	152	336	416	368	416	416	368	416	368	192
	$M_{2Em.Off}$	Nm	390	520	500	340	380	480	500	520	500	520	520	500	520	500	380
	$J_{1,G}$	kg cm²	2.36	1.84	1.63	1.46	1.43	1.38	2.29	2.22	2.2	1.75	1.57	1.57	1.42	1.42	1.41
	$\varphi_{2,G}$	'	7						9								

Color legend:

	$M_{max,M} \times i < M_{2N,G}$	The motor and gearbox combination is fatigue-proof
	$M_{2N,G} < M_{max,M} \times i < M_{2max,G}$	Check acceleration and inertias, perform service life calculation if necessary
	$M_{max,M} \times i > M_{2max,G}$	The motor can destroy the gearbox, check acceleration and inertias, perform service life calculation if necessary

© Siemens 2022

Servomotor data

$M_{0,M}$	M_{maxM}	J_M ($J_{M,Br}$)
Nm	Nm	kg cm²
23.1 ... 23.5	77.1 ... 78.2	50.46 (55.96)

Selection data servomotors with planetary gearbox

Servomotors with planetary gearbox

SIMOTICS S-1FK2 and S-1FT2 Compact servomotors with planetary gearbox NRB120 1 and 2-stage (continued)

n_{2N}	rpm	375	250	200	150	150	–	125	75	75	60	–	–	–	–	–	**1F.2208-5AC..-0..0-Z**
M_{2N}	Nm	42.5	64	81	110	111	–	124	200	200	250	–	–	–	–	–	■■■ + ■■■ + . . .
$M_{2,0}$	Nm	70	94	117	135	120	–	205	260	230	260	–	–	–	–	–	
M_{2max}	Nm	184	248	312	216	192	–	336	416	368	415	–	–	–	–	–	

Planetary gearbox data

Gearbox type:		**NRB120, 1-stage**						**NRB120, 2-stage**								
1. Order code		**A41**						**A42**								
i		**3**	**4**	**5**	**7**	**8**	**10**	**9**	**12**	**15**	**16**	**20**	**25**	**32**	**40**	**64**
2. Order code		**R03**	**R04**	**R05**	**R07**	**R08**	**R10**	**R09**	**R12**	**R15**	**R16**	**R20**	**R25**	**R32**	**R40**	**R64**
$M_{2N,G}$	Nm	115	155	195	135	120	95	210	260	230	260	260	230	260	230	120
$M_{2max,G}$	Nm	184	248	312	216	192	152	336	416	368	416	416	368	416	368	192
$M_{2Em.Off}$	Nm	390	520	500	340	380	480	500	520	500	520	520	500	520	500	380
$J_{1,G}$	kg cm²	2.36	1.84	1.63	1.46	1.43	1.38	2.29	2.22	2.2	1.75	1.57	1.57	1.42	1.42	1.41
$\varphi_{2,G}$	'	7						9								

Color legend:		
	$M_{max,M} \times i < M_{2N,G}$	**The motor and gearbox combination is fatigue-proof**
	$M_{2N,G} < M_{max,M} \times i < M_{2max,G}$	**Check acceleration and inertias, perform service life calculation if necessary**
	$M_{max,M} \times i > M_{2max,G}$	**The motor can destroy the gearbox, check acceleration and inertias, perform service life calculation if necessary**

© Siemens 2022

SIMOTICS S-1FK2 and S-1FT2 servo planetary geared motors

for servo converters with line connection 400 V 3 AC

Gearbox type NRB120

Servomotor data $M_{0,M}$ Nm	M_{maxM} Nm	J_M ($J_{M,Br}$) kg cm²	Selection data servomotors with planetary gearbox									Servomotors with planetary gearbox
SIMOTICS S-1FK2 and S-1FT2 High Dynamic servomotors with planetary gearbox NRB120 3-stage												
1.03 ... 1.09	3.43 ... 3.51	0.35 (0.43)	n_{2N}	rpm	50	37.5	30	25	20	15	12.5	10	1F.2104-4AF..-0..0-Z
			M_{2N}	Nm	45	69	86	93	143	185	225	225	■■■ + ■■■ + . . .
			$M_{2,0}$	Nm	64	86	107	129	172	215	260	230	
			M_{2max}	Nm	205	275	340	368	416	368	416	368	
2.13 ... 2.18	7.01 ... 7.19	0.56 (0.65)	n_{2N}	rpm	37.5	30	25	20	20	–	–	–	1F.2104-5AF..-0..0-Z
			M_{2N}	Nm	120	162	197	225	250	–	–	–	■■■ + ■■■ + . . .
			$M_{2,0}$	Nm	129	171	210	230	260	–	–	–	
			M_{2max}	Nm	416	416	416	368	416	–	–	–	
2.87 ... 2.93	9.39 ... 9.64	0.76 (0.84)	n_{2N}	rpm	37.5	30	25	20	20	–	–	–	1F.2104-6AF..-0..0-Z
			M_{2N}	Nm	143	194	230	230	260	–	–	–	■■■ + ■■■ + . . .
			$M_{2,0}$	Nm	172	230	260	230	260	–	–	–	
			M_{2max}	Nm	416	416	416	368	416	–	–	–	
4.56 ... 4.66	14.1 ... 14.5	1.71 (2.55)	n_{2N}	rpm	37.5	30	25	–	–	–	–	–	1F.2105-4AF..-0..0-Z
			M_{2N}	Nm	205	260	260	–	–	–	–	–	■■■ + ■■■ + . . .
			$M_{2,0}$	Nm	260	260	260	–	–	–	–	–	
			M_{2max}	Nm	416	416	415	–	–	–	–	–	
7.46 ... 7.62	22.8 ... 23.4	2.65 (3.5)	n_{2N}	rpm	37.5	–	–	–	–	–	–	–	1F.2105-6AF..-0..0-Z
			M_{2N}	Nm	235	–	–	–	–	–	–	–	■■■ + ■■■ + . . .
			$M_{2,0}$	Nm	260	–	–	–	–	–	–	–	
			M_{2max}	Nm	416	–	–	–	–	–	–	–	
SIMOTICS S-1FK2 and S-1FT2 Compact servomotors with planetary gearbox NRB120 3-stage												
2.09 ... 2.14	6.61 ... 6.78	1.23 (1.31)	n_{2N}	rpm	37.5	30	25	20	20	–	–	–	1F.2204-5AF..-0..0-Z
			M_{2N}	Nm	112	151	184	210	220	–	–	–	■■■ + ■■■ + . . .
			$M_{2,0}$	Nm	126	168	210	230	260	–	–	–	
			M_{2max}	Nm	395	416	416	368	416	–	–	–	
2.11 ... 2.16	6.61 ... 6.78	1.23 (1.31)	n_{2N}	rpm	37.5	30	25	20	20	–	–	–	1F.2204-5AK..-0..0-Z
			M_{2N}	Nm	116	157	188	215	225	–	–	–	■■■ + ■■■ + . . .
			$M_{2,0}$	Nm	127	169	210	230	260	–	–	–	
			M_{2max}	Nm	395	416	416	368	416	–	–	–	
2.86 ... 2.92	8.9 ... 9.13	1.61 (1.69)	n_{2N}	rpm	37.5	30	25	20	20	–	–	–	1F.2204-6AF..-0..0-Z
			M_{2N}	Nm	148	200	235	230	260	–	–	–	■■■ + ■■■ + . . .
			$M_{2,0}$	Nm	172	225	260	230	260	–	–	–	
			M_{2max}	Nm	416	416	416	368	416	–	–	–	
3.12 ... 3.23	10.1 ... 10.4	3.15 (4.05)	n_{2N}	rpm	37.5	30	25	20	–	–	–	–	1F.2205-2AF..-0..0-Z
			M_{2N}	Nm	143	192	230	230	–	–	–	–	■■■ + ■■■ + . . .
			$M_{2,0}$	Nm	187	245	260	230	–	–	–	–	
			M_{2max}	Nm	416	416	416	368	–	–	–	–	
5.27 ... 5.46	17 ... 17.4	5.1 (6)	n_{2N}	rpm	30	30	–	–	–	–	–	–	1F.2205-4AF..-0..0-Z
			M_{2N}	Nm	240	230	–	–	–	–	–	–	■■■ + ■■■ + . . .
			$M_{2,0}$	Nm	260	260	–	–	–	–	–	–	
			M_{2max}	Nm	416	416	–	–	–	–	–	–	

Planetary gearbox data									
Gearbox type:			NRB120, 3-stage						
1. Order code			A43						
i			60	80	100	120	160	200	256	320
2. Order code			R60	R80	R01	R21	R61	R02	R52	R23
$M_{2N,G}$	Nm		260	260	260	230	260	230	260	230
$M_{2max,G}$	Nm		416	416	416	368	416	368	416	368
$M_{2Em.Off}$	Nm		520	520	520	500	520	500	520	500
$J_{1,G}$	kg cm²		2.2	1.57	1.56	2.18	1.42	1.42	1.41	1.41
$\varphi_{2,G}$	'		11							

Color legend:		
	$M_{max,M} \times i < M_{2N,G}$	The motor and gearbox combination is fatigue-proof
	$M_{2N,G} < M_{max,M} \times i < M_{2max,G}$	Check acceleration and inertias, perform service life calculation if necessary
	$M_{max,M} \times i > M_{2max,G}$	The motor can destroy the gearbox, check acceleration and inertias, perform service life calculation if necessary

© Siemens 2022

Selection and ordering data

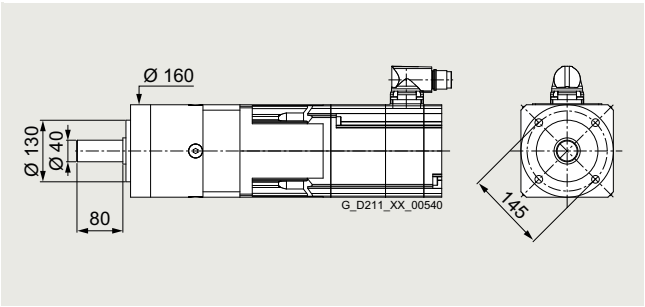

Permissible output shaft loads		
Average radial force for 20000 h	$F_{R,eq}$	5000 N
Average axial force for 20000 h	$F_{A,eq}$	7000 N
Average radial force for 30000 h	$F_{R,eq}$	4200 N
Average axial force for 30000 h	$F_{A,eq}$	6000 N
Maximum radial force	$F_{R,max}$	5000 N
Maximum axial force	$F_{A,max}$	11000 N

Servomotor data			Selection data servomotors with planetary gearbox														Servomotors with planetary gearbox
$M_{0,M}$	M_{maxM}	J_M ($J_{M,Br}$)															
Nm	Nm	kg cm²															
SIMOTICS S-1FK2 and S-1FT2 High Dynamic servomotors with planetary gearbox NRB160 1 and 2-stage																	
4.16	14	1.71 (2.55)	n_{2N}	rpm	300	250	200	150	100	75	75	60	50	50	37.5	20	**1F.2105-4AF..-0..0-Z**
...	...		M_{2N}	Nm	11.2	14.8	19.5	31	44	57	60	76	95	96	136	245	■■■ + ■■■ + . . .
4.28	14.1		M_{2_0}	Nm	12.4	16.8	21	34	51	63	68	85	106	136	170	270	
			M_{2max}	Nm	42	56	70	113	168	210	220	275	345	445	550	720	
7.13	22.6	2.65 (3.5)	n_{2N}	rpm	300	250	200	150	100	75	75	60	50	37.5	30	20	**1F.2105-6AF..-0..0-Z**
...	...		M_{2N}	Nm	16.5	21	29	43	60	83	82	110	132	187	230	350	■■■ + ■■■ + . . .
7.24	22.9		M_{2_0}	Nm	21	28.5	36	57	86	107	114	143	179	230	285	450	
			M_{2max}	Nm	68	91	114	183	270	340	360	450	560	720	900	720	
7.5	23.1	4.6 (6.3)	n_{2N}	rpm	300	250	200	150	100	75	75	60	50	37.5	30	20	**1F.2106-3AF..-0..0-Z**
...	...		M_{2N}	Nm	17.5	22.5	30.5	45.5	63	88	86	115	139	195	240	365	■■■ + ■■■ + . . .
7.65	23.4		M_{2_0}	Nm	22.5	30	38	61	90	112	120	150	187	240	300	450	
			M_{2max}	Nm	69	93	116	186	275	345	365	460	570	730	920	720	
9.84	30.8	6 (7.6)	n_{2N}	rpm	300	250	200	150	100	75	75	60	50	37.5	30	20	**1F.2106-4AF..-0..0-Z**
...	...		M_{2N}	Nm	22.5	28.5	39	56	76	108	104	140	167	235	295	435	■■■ + ■■■ + . . .
10	31.2		M_{2_0}	Nm	29.5	39.5	50	80	118	147	157	196	245	310	390	450	
			M_{2max}	Nm	93	124	155	245	370	460	490	610	770	980	1120	720	
14.1	40	8.7 (10.4)	n_{2N}	rpm	300	200	200	125	75	60	60	50	37.5	37.5	25	–	**1F.2106-6AF..-0..0-Z**
...	...		M_{2N}	Nm	30	47	51	88	137	172	173	215	285	290	440	–	■■■ + ■■■ + . . .
14.4	40.5		M_{2_0}	Nm	42.5	57	71	114	168	210	225	280	350	450	560	–	
			M_{2max}	Nm	121	162	200	320	480	600	640	800	1000	1280	1120	–	

Planetary gearbox data														
Gearbox type:			**NRB160, 1-stage**				**NRB160, 2-stage**							
1. Order code			**A51**				**A52**							
	i		**3**	**4**	**5**	**8**	**12**	**15**	**16**	**20**	**25**	**32**	**40**	**64**
2. Order code			**R03**	**R04**	**R05**	**R08**	**R12**	**R15**	**R16**	**R20**	**R25**	**R32**	**R40**	**R64**
	$M_{2N,G}$	Nm	400	450	450	450	800	700	800	800	700	800	700	450
	$M_{2max,G}$	Nm	640	720	720	720	1280	1120	1280	1280	1120	1280	1120	720
	$M_{2Em.Off}$	Nm	800	900	900	900	1600	1400	1600	1600	1400	1600	1400	900
	$J_{1,G}$	kg cm²	12	6.91	5.19	3.73	10.1	9.91	6.06	4.7	4.63	3.55	3.52	3.5
	$\varphi_{2,G}$	'	6				9							

Color legend:		
	$M_{max,M} \times i < M_{2N,G}$	**The motor and gearbox combination is fatigue-proof**
	$M_{2N,G} < M_{max,M} \times i < M_{2max,G}$	**Check acceleration and inertias, perform service life calculation if necessary**
	$M_{max,M} \times i > M_{2max,G}$	**The motor can destroy the gearbox, check acceleration and inertias, perform service life calculation if necessary**

© Siemens 2022

Gearbox type NRB160

Servomotor data $M_{0,M}$ Nm	M_{maxM} Nm	J_M ($J_{M,Br}$) kg cm²	Selection data servomotors with planetary gearbox														Servomotors with planetary gearbox
SIMOTICS S-1FK2 and S-1FT2 Compact servomotors with planetary gearbox NRB160 1 and 2-stage																	
2.68 ... 2.81	9.91 ... 10	3.15 (4.05)	n_{2N}	rpm	300	250	250	150	100	75	75	75	60	50	37.5	25	**1F.2205-2AF..-0..0-Z**
			M_{2N}	Nm	5.9	8.1	8.9	17.6	25	32	33.5	36.5	47	61	85	127	■■■ + ■■■ + . . .
			$M_{2,0}$	Nm	8	10.9	13.8	22	33	41	44	55	69	88	111	178	
			M_{2max}	Nm	29.5	39.5	49.5	80	119	148	158	198	245	315	395	630	
4.91 ... 5.02	16.8 ... 17	5.1 (6)	n_{2N}	rpm	300	250	200	150	100	75	75	60	50	37.5	30	20	**1F.2205-4AF..-0..0-Z**
			M_{2N}	Nm	10.4	13.4	18.8	28	40	56	55	74	89	127	160	240	■■■ + ■■■ + . . .
			$M_{2,0}$	Nm	14.7	19.8	24.5	40	59	74	78	98	123	158	197	315	
			M_{2max}	Nm	50	67	85	136	200	250	265	335	420	530	670	720	
5.07 ... 5.18	16.9 ... 17.1	7.8 (9.4)	n_{2N}	rpm	300	250	200	150	100	75	75	60	50	37.5	37.5	20	**1F.2206-2AF..-0..0-Z**
			M_{2N}	Nm	12.1	16.1	21	33	47.5	61	64	82	102	134	143	260	■■■ + ■■■ + . . .
			$M_{2,0}$	Nm	15.2	20	25.5	41	61	76	81	102	127	163	200	325	
			M_{2max}	Nm	50	68	85	136	200	250	270	335	420	530	670	720	
10.3 ... 10.5	34.2 ... 34.7	15.1 (16.8)	n_{2N}	rpm	300	250	200	150	75	75	60	60	50	37.5	30	20	**1F.2206-4AF..-0..0-Z**
			M_{2N}	Nm	23	29	39.5	57	106	110	137	143	170	240	300	445	■■■ + ■■■ + . . .
			$M_{2,0}$	Nm	31	41.5	52	84	123	154	164	205	255	325	410	450	
			M_{2max}	Nm	104	138	173	275	410	510	540	680	850	1090	1120	720	
15 ... 15.3	48.7 ... 49.4	29.6 (33)	n_{2N}	rpm	250	200	200	125	75	60	60	50	37.5	30	25	–	**1F.2208-3AC..-0..0-Z**
			M_{2N}	Nm	35	46	48.5	85	134	169	167	205	275	355	425	–	■■■ + ■■■ + . . .
			$M_{2,0}$	Nm	45.5	61	76	122	180	225	240	300	375	480	590	–	
			M_{2max}	Nm	148	197	245	390	580	730	780	970	1120	1280	1120	–	
18.7 ... 19.1	63.1 ... 64.1	38.8 (44.4)	n_{2N}	rpm	250	200	150	125	75	60	50	50	37.5	30	25	–	**1F.2208-4AC..-0..0-Z**
			M_{2N}	Nm	42	54	75	97	154	194	230	230	315	400	480	–	■■■ + ■■■ + . . .
			$M_{2,0}$	Nm	57	76	95	153	220	280	295	370	465	590	700	–	
			M_{2max}	Nm	192	255	320	510	760	940	1010	1260	1120	1280	1120	–	
22.5 ... 23	76.6 ... 77.8	48.1 (53.6)	n_{2N}	rpm	250	200	150	100	60	50	50	37.5	30	25	20	–	**1F.2208-5AC..-0..0-Z**
			M_{2N}	Nm	47.5	61	85	135	210	255	250	340	425	520	650	–	■■■ + ■■■ + . . .
			$M_{2,0}$	Nm	68	91	114	183	270	335	355	445	560	710	700	–	
			M_{2max}	Nm	230	310	385	620	920	1120	1220	1280	1120	1280	1120	–	

Planetary gearbox data													
Gearbox type:			**NRB160, 1-stage**				**NRB160, 2-stage**						
1. Order code			**A51**				**A52**						
	i		**3**	**4**	**5**	**8**	**12**	**15**	**16**	**20**	**25**	**32**	**40**	**64**
2. Order code			**R03**	**R04**	**R05**	**R08**	**R12**	**R15**	**R16**	**R20**	**R25**	**R32**	**R40**	**R64**
	$M_{2N,G}$	Nm	400	450	450	450	800	700	800	800	700	800	700	450
	$M_{2max,G}$	Nm	640	720	720	720	1280	1120	1280	1280	1120	1280	1120	720
	$M_{2Em.Off}$	Nm	800	900	900	900	1600	1400	1600	1600	1400	1600	1400	900
	$J_{1,G}$	kg cm²	12	6.91	5.19	3.73	10.1	9.91	6.06	4.7	4.63	3.55	3.52	3.5
	$\varphi_{2,G}$	'	6				9							

Color legend:		
	$M_{max,M} \times i < M_{2N,G}$	The motor and gearbox combination is fatigue-proof
	$M_{2N,G} < M_{max,M} \times i < M_{2max,G}$	Check acceleration and inertias, perform service life calculation if necessary
	$M_{max,M} \times i > M_{2max,G}$	The motor can destroy the gearbox, check acceleration and inertias, perform service life calculation if necessary

© Siemens 2022

Selection and ordering data

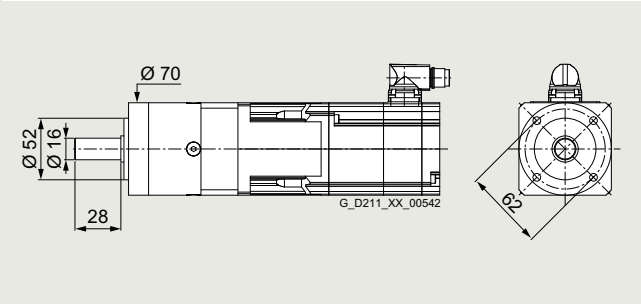

Permissible output shaft loads		
Average radial force for 20000 h	$F_{R,eq}$	1050 N
Average axial force for 20000 h	$F_{A,eq}$	1350 N
Average radial force for 30000 h	$F_{R,eq}$	900 N
Average axial force for 30000 h	$F_{A,eq}$	1000 N
Maximum radial force	$F_{R,max}$	1650 N
Maximum axial force	$F_{A,max}$	2100 N

Servomotor data			Selection data servomotors with planetary gearbox															Servomotors with planetary gearbox
$M_{0,M}$	M_{maxM}	J_M ($J_{M,Br}$)																
Nm	Nm	kg cm²																
SIMOTICS S-1FK2 and S-1FT2 High Dynamic servomotors with planetary gearbox NRK070 1 and 2-stage																		
1.15	3.58	0.371	n_{2N}	rpm	750	600	600	500	375	300	375	250	200	200	150	125	100	75	**1F.2104-4AF..-2..0-Z**
...	...	(0.451)	M_{2N}	Nm	2.7	3.9	4.4	5.8	7.8	10	7.8	11.6	14.9	15.5	19.9	24.5	31.5	30	■■■ + ■■■ + . . .
1.19	3.62		M_{2_0}	Nm	3.45	4.65	5.8	8.2	9.4	11.8	10.5	14.1	17.7	18.9	23.5	29.5	33	30	
			M_{2max}	Nm	10.7	14.4	18	25	28.5	24	32	43	53	53	53	48	53	48	
2.26	7.21	0.581	n_{2N}	rpm	750	600	500	375	375	300	300	250	200	200	150	125	–	–	**1F.2104-5AF..-2..0-Z**
...	...	(0.671)	M_{2N}	Nm	4.5	6.4	8.2	11.8	12.2	15	14.6	17.9	23.5	23	31.5	30	–	–	■■■ + ■■■ + . . .
2.29	7.29		M_{2_0}	Nm	6.7	9	11.3	15.9	18	15	20	27	33	33	33	30	–	–	
			M_{2max}	Nm	21.5	29	36	40	29	24	53	53	53	53	53	48	–	–	
3.01	9.63	0.781	n_{2N}	rpm	750	600	500	375	375	–	300	250	200	–	–	–	–	–	**1F.2104-6AF..-2..0-Z**
...	...	(0.861)	M_{2N}	Nm	5.4	7.7	9.8	14.1	14.5	–	17	20.5	27	–	–	–	–	–	■■■ + ■■■ + . . .
3.03	9.74		M_{2_0}	Nm	9	12	15.1	21	18	–	27	33	33	–	–	–	–	–	
			M_{2max}	Nm	29	38.5	48	40	29	–	53	53	53	–	–	–	–	–	
4.69	14.4	1.98	n_{2N}	rpm	600	500	375	300	–	–	–	–	–	–	–	–	–	–	**1F.2105-4AF..-0..0-Z**
...	...	(2.82)	M_{2N}	Nm	9.1	11.4	16.3	21	–	–	–	–	–	–	–	–	–	–	■■■ + ■■■ + . . .
4.73	14.6		M_{2_0}	Nm	14.1	18.8	23.5	25	–	–	–	–	–	–	–	–	–	–	
			M_{2max}	Nm	43.5	53	48	40	–	–	–	–	–	–	–	–	–	–	
7.29	23.4	2.92	n_{2N}	rpm	500	375	–	–	–	–	–	–	–	–	–	–	–	–	**1F.2105-6AF..-0..0-Z**
...	...	(3.77)	M_{2N}	Nm	14	19.5	–	–	–	–	–	–	–	–	–	–	–	–	■■■ + ■■■ + . . .
7.3	23.4		M_{2_0}	Nm	21.5	29	–	–	–	–	–	–	–	–	–	–	–	–	
			M_{2max}	Nm	45	53	–	–	–	–	–	–	–	–	–	–	–	–	

Planetary gearbox data																
Gearbox type:			NRK070, 1-stage						NRK070, 2-stage							
1. Order code			B21						B22							
	i		3	4	5	7	8	10	9	12	15	16	20	25	32	40
2. Order code			R03	R04	R05	R07	R08	R10	R09	R12	R15	R16	R20	R25	R32	R40
	$M_{2N,G}$	Nm	28	33	30	25	18	15	33	33	33	33	33	30	33	30
	$M_{2max,G}$	Nm	45	53	48	40	29	24	53	53	53	53	53	48	53	48
	$M_{2Em.Off}$	Nm	66	88	80	80	80	80	88	88	88	88	88	80	88	80
	$J_{1,G}$	kg cm²	0.174	0.117	0.095	0.078	0.074	0.069	0.126	0.121	0.078	0.087	0.076	0.075	0.067	0.066
	$\varphi_{2,G}$	'	10						12							

Color legend:		
	$M_{max,M} \times i < M_{2N,G}$	**The motor and gearbox combination is fatigue-proof**
	$M_{2N,G} < M_{max,M} \times i < M_{2max,G}$	**Check acceleration and inertias, perform service life calculation if necessary**
	$M_{max,M} \times i > M_{2max,G}$	**The motor can destroy the gearbox, check acceleration and inertias, perform service life calculation if necessary**

© Siemens 2022

Gearbox type NRK070

Servomotor data			Selection data servomotors with planetary gearbox															Servomotors with planetary gearbox
$M_{0,M}$	M_{maxM}	J_M ($J_{M,Br}$)																
Nm	Nm	kg cm²																
SIMOTICS S-1FK2 and S-1FT2 Compact servomotors with planetary gearbox NRK070 1 and 2-stage																		
2.22 ... 2.25	6.81 ... 6.88	1.251 (1.331)	n_{2N}	rpm	600	600	500	375	300	300	300	200	200	150	150	125	–	–	**1F.2204-5AF..-2..0-Z**
			M_{2N}	Nm	5.1	5.7	7.3	10.5	13.4	13.5	12.9	20	20.5	27	27.5	30	–	–	■■■ + ■■■ + . . .
			$M_{2,0}$	Nm	6.6	8.9	11.1	15.6	17.9	15	20	26.5	33	33	33	30	–	–	
			M_{2max}	Nm	20.5	27.5	34	40	29	24	53	53	53	53	53	48	–	–	
2.23 ... 2.26	6.81 ... 6.88	1.251 (1.331)	n_{2N}	rpm	600	600	500	375	300	300	300	200	200	150	150	125	–	–	**1F.2204-5AK..-2..0-Z**
			M_{2N}	Nm	5.2	5.8	7.5	10.7	13.6	13.8	13.2	20	21	27.5	28	30	–	–	■■■ + ■■■ + . . .
			$M_{2,0}$	Nm	6.6	8.9	11.2	15.7	18	15	20	26.5	33	33	33	30	–	–	
			M_{2max}	Nm	20.5	27.5	34	40	29	24	53	53	53	53	53	48	–	–	
2.99 ... 3.02	9.13 ... 9.24	1.631 (1.711)	n_{2N}	rpm	600	500	500	375	300	–	250	200	200	–	–	–	–	–	**1F.2204-6AF..-2..0-Z**
			M_{2N}	Nm	6.8	9	9.6	13.6	17.4	–	19.9	25.5	25.5	–	–	–	–	–	■■■ + ■■■ + . . .
			$M_{2,0}$	Nm	8.9	12	15	21	18	–	26.5	33	33	–	–	–	–	–	
			M_{2max}	Nm	27.5	36.5	46	40	29	–	53	53	53	–	–	–	–	–	
2.9 ... 2.92	10.4 ... 10.5	3.42 (4.32)	n_{2N}	rpm	500	500	375	300	250	–	200	150	150	125	–	–	–	–	**1F.2205-2AF..-0..0-Z**
			M_{2N}	Nm	7	7.5	10.8	14	17.1	–	20.5	28	28.5	33	–	–	–	–	■■■ + ■■■ + . . .
			$M_{2,0}$	Nm	8.6	11.6	14.5	20	18	–	26	33	33	33	–	–	–	–	
			M_{2max}	Nm	31	41.5	48	40	29	–	53	53	53	53	–	–	–	–	
4.94 ... 4.98	17.3 ... 17.5	5.37 (6.27)	n_{2N}	rpm	500	375	300	250	–	–	200	–	–	–	–	–	–	–	**1F.2205-4AF..-0..0-Z**
			M_{2N}	Nm	9.3	13.1	16.9	21	–	–	25.5	–	–	–	–	–	–	–	■■■ + ■■■ + . . .
			$M_{2,0}$	Nm	14.9	19.9	24.5	25	–	–	33	–	–	–	–	–	–	–	
			M_{2max}	Nm	45	53	48	40	–	–	53	–	–	–	–	–	–	–	

Planetary gearbox data																
Gearbox type:			NRK070, 1-stage						NRK070, 2-stage							
1. Order code			B21						B22							
	i		3	4	5	7	8	10	9	12	15	16	20	25	32	40
2. Order code			R03	R04	R05	R07	R08	R10	R09	R12	R15	R16	R20	R25	R32	R40
	$M_{2N,G}$	Nm	28	33	30	25	18	15	33	33	33	33	33	30	33	30
	$M_{2max,G}$	Nm	45	53	48	40	29	24	53	53	53	53	53	48	53	48
	$M_{2Em.Off}$	Nm	66	88	80	80	80	80	88	88	88	88	88	80	88	80
	$J_{1,G}$	kg cm²	0.174	0.117	0.095	0.078	0.074	0.069	0.126	0.121	0.078	0.087	0.076	0.075	0.067	0.066
	$\varphi_{2,G}$	'	10						12							

Color legend:		
	$M_{max,M} \times i < M_{2N,G}$	**The motor and gearbox combination is fatigue-proof**
	$M_{2N,G} < M_{max,M} \times i < M_{2max,G}$	**Check acceleration and inertias, perform service life calculation if necessary**
	$M_{max,M} \times i > M_{2max,G}$	**The motor can destroy the gearbox, check acceleration and inertias, perform service life calculation if necessary**

© Siemens 2022

Selection and ordering data

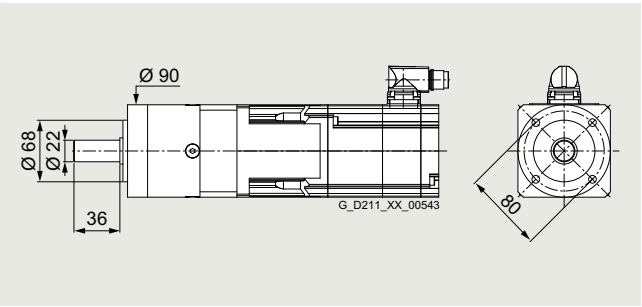

Permissible output shaft loads		
Average radial force for 20000 h	$F_{R,eq}$	1900 N
Average axial force for 20000 h	$F_{A,eq}$	2000 N
Average radial force for 30000 h	$F_{R,eq}$	1700 N
Average axial force for 30000 h	$F_{A,eq}$	1500 N
Maximum radial force	$F_{R,max}$	3100 N
Maximum axial force	$F_{A,max}$	3800 N

Servomotor data			Selection data servomotors with planetary gearbox																Servomotors with planetary gearbox
$M_{0,M}$	M_{maxM}	J_M ($J_{M,Br}$)																	
Nm	Nm	kg cm²																	
SIMOTICS S-1FK2 and S-1FT2 High Dynamic servomotors with planetary gearbox NRK090 1 and 2-stage																			
1.1	3.54	0.35	n_{2N}	rpm	750	600	500	375	375	300	300	250	200	200	150	125	100	75	50	**1F.2104-4AF..-2..0-Z**
...	...	(0.43)	M_{2N}	Nm	2.3	3.5	4.65	6.8	7.5	9.6	8.4	10.9	13.8	14.5	19.2	23.5	30.5	39.5	50	■■■ + ■■■ + . . .
1.15	3.58		M_{2_0}	Nm	3.25	4.45	5.6	7.9	9.1	11.4	10.2	13.7	17.1	18.3	22.5	28.5	36.5	46	50	
			M_{2max}	Nm	10.6	14.2	17.7	24.5	28.5	35.5	31.5	42.5	53	56	70	88	113	131	80	
2.2	7.16	0.56	n_{2N}	rpm	600	500	500	375	300	300	300	200	150	150	150	125	100	75	–	**1F.2104-5AF..-2..0-Z**
...	...	(0.65)	M_{2N}	Nm	5.4	7.3	8	12	15.3	16.1	14.7	22.5	30	31	32.5	39	51	69	–	■■■ + ■■■ + . . .
2.25	7.25		M_{2_0}	Nm	6.6	8.8	11.1	15.6	17.9	22	20	26.5	33	35.5	44.5	55	71	82	–	
			M_{2max}	Nm	21.5	28.5	36	50	57	61	64	86	107	114	143	131	144	131	–	
2.95	9.58	0.76	n_{2N}	rpm	600	500	500	375	300	250	250	200	150	150	125	100	100	75	–	**1F.2104-6AF..-2..0-Z**
...	...	(0.84)	M_{2N}	Nm	6.6	8.9	9.6	14.3	18.3	22.5	20.5	27	35.5	36.5	45.5	57	59	80	–	■■■ + ■■■ + . . .
3	9.7		M_{2_0}	Nm	8.8	11.8	14.8	20.5	23.5	29.5	26.5	35.5	44.5	47.5	59	74	90	82	–	
			M_{2max}	Nm	29	38.5	48	67	77	61	86	115	131	144	144	131	144	131	–	
4.67	14.4	1.71	n_{2N}	rpm	600	500	375	300	300	250	250	200	150	125	125	100	100	–	–	**1F.2105-4AF..-0..0-Z**
...	...	(2.55)	M_{2N}	Nm	10.7	13.9	19.6	26.5	27	33	30.5	38	51	62	63	78	69	–	–	■■■ + ■■■ + . . .
4.72	14.6		M_{2_0}	Nm	14	18.7	23.5	33	37.5	38	42	56	70	74	90	82	90	–	–	
			M_{2max}	Nm	43.5	58	72	102	80	61	130	144	131	144	144	131	144	–	–	
7.41	23.1	2.65	n_{2N}	rpm	500	375	375	300	250	–	200	150	125	125	100	–	–	–	–	**1F.2105-6AF..-0..0-Z**
...	...	(3.5)	M_{2N}	Nm	16.5	23	24.5	32.5	39.5	–	46	62	74	74	90	–	–	–	–	■■■ + ■■■ + . . .
7.51	23.4		M_{2_0}	Nm	22	29.5	37.5	52	50	–	66	89	82	90	90	–	–	–	–	
			M_{2max}	Nm	70	93	116	104	80	–	155	144	131	144	144	–	–	–	–	
7.48	23.4	5.472	n_{2N}	rpm	375	375	300	200	200	–	150	125	100	100	100	–	–	–	–	**1F.2106-3AF..-0..0-Z**
...	...	(7.172)	M_{2N}	Nm	18.6	19.9	25.5	40	40.5	–	51	62	78	77	68	–	–	–	–	■■■ + ■■■ + . . .
7.58	23.8		M_{2_0}	Nm	22.5	30	37.5	53	50	–	67	90	82	90	90	–	–	–	–	
			M_{2max}	Nm	71	95	118	104	80	–	155	144	131	144	144	–	–	–	–	
9.7	31.2	6.872	n_{2N}	rpm	375	300	250	200	200	–	–	125	–	–	–	–	–	–	–	**1F.2106-4AF..-0..0-Z**
...	...	(8.472)	M_{2N}	Nm	23	30	36.5	48	47	–	–	71	–	–	–	–	–	–	–	■■■ + ■■■ + . . .
9.82	31.6		M_{2_0}	Nm	29	39	49	65	50	–	–	90	–	–	–	–	–	–	–	
			M_{2max}	Nm	94	126	131	104	79	–	–	144	–	–	–	–	–	–	–	

Planetary gearbox data																
Gearbox type:		**NRK090, 1-stage**						**NRK090, 2-stage**								
1. Order code		**B31**						**B32**								
i		**3**	**4**	**5**	**7**	**8**	**10**	**9**	**12**	**15**	**16**	**20**	**25**	**32**	**40**	**64**
2. Order code		**R03**	**R04**	**R05**	**R07**	**R08**	**R10**	**R09**	**R12**	**R15**	**R16**	**R20**	**R25**	**R32**	**R40**	**R64**
$M_{2N,G}$	Nm	85	90	82	65	50	38	97	90	82	90	90	82	90	82	50
$M_{2max,G}$	Nm	136	144	131	104	80	61	155	144	131	144	144	131	144	131	80
$M_{2Em.Off}$	Nm	180	240	220	178	190	200	260	240	220	240	240	220	240	220	190
$J_{1,G}$	kg cm²	0.789	0.557	0.476	0.409	0.394	0.374	0.625	0.601	0.592	0.453	0.41	0.406	0.368	0.366	0.367
$\varphi_{2,G}$	'	7						9								

Color legend:		
	$M_{max,M} \times i < M_{2N,G}$	**The motor and gearbox combination is fatigue-proof**
	$M_{2N,G} < M_{max,M} \times i < M_{2max,G}$	**Check acceleration and inertias, perform service life calculation if necessary**
	$M_{max,M} \times i > M_{2max,G}$	**The motor can destroy the gearbox, check acceleration and inertias, perform service life calculation if necessary**

© Siemens 2022

Gearbox type NRK090

Servomotor data

$M_{0,M}$	M_{maxM}	J_M ($J_{M,Br}$)
Nm	Nm	kg cm²

Selection data servomotors with planetary gearbox

Servomotors with planetary gearbox

SIMOTICS S-1FK2 and S-1FT2 Compact servomotors with planetary gearbox NRK090 1 and 2-stage

$M_{0,M}$	M_{maxM}	J_M ($J_{M,Br}$)																		Servomotors with planetary gearbox
2.16 ... 2.21	6.76 ... 6.84	1.23 (1.31)	n_{2N}	rpm	600	500	375	375	300	250	250	200	150	150	125	100	75	75	–	1F.2204-5AF..-2..0-Z
			M_{2N}	Nm	5.1	6.8	9.7	10.7	14.1	17.6	16.4	21	28	29	36	45	61	61	–	■■■ + ■■■ + . . .
			$M_{2,0}$	Nm	6.4	8.7	10.9	15.4	17.6	22	19.6	26	32.5	35	43.5	54	70	82	–	
			M_{2max}	Nm	20	27	34	47.5	54	61	61	81	101	108	135	131	144	131	–	
2.17 ... 2.22	6.76 ... 6.84	1.23 (1.31)	n_{2N}	rpm	600	500	375	300	300	250	250	200	150	150	125	100	75	75	–	1F.2204-5AK..-2..0-Z
			M_{2N}	Nm	5.2	7	9.9	13.7	14.4	18	16.8	21.5	28.5	29.5	36.5	46	62	62	–	■■■ + ■■■ + . . .
			$M_{2,0}$	Nm	6.5	8.7	10.9	15.4	17.7	22	19.7	26	33	35	44	55	70	82	–	
			M_{2max}	Nm	20	27	34	47.5	54	61	61	81	101	108	135	131	144	131	–	
2.94 ... 2.98	9.08 ... 9.2	1.61 (1.69)	n_{2N}	rpm	600	500	375	300	300	250	250	200	150	150	125	100	75	75	–	1F.2204-6AF..-2..0-Z
			M_{2N}	Nm	6.9	9.2	13	17.9	18.6	23	21	27	36.5	37	46	57	78	76	–	■■■ + ■■■ + . . .
			$M_{2,0}$	Nm	8.8	11.8	14.8	20.5	23.5	29.5	26.5	35	44	47	59	73	90	82	–	
			M_{2max}	Nm	27.5	36.5	45.5	64	73	61	82	109	131	144	144	131	144	131	–	
2.98 ... 3.02	10.3 ... 10.5	3.15 (4.05)	n_{2N}	rpm	600	500	375	300	300	250	250	200	150	150	125	100	75	75	–	1F.2205-2AF..-0..0-Z
			M_{2N}	Nm	6.9	9.1	12.6	17.5	18.2	22.5	21	26.5	36	36.5	45	56	77	73	–	■■■ + ■■■ + . . .
			$M_{2,0}$	Nm	8.9	11.9	15	21	24	30	26.5	35.5	44.5	47.5	59	74	90	82	–	
			M_{2max}	Nm	31	41.5	52	73	80	61	93	124	131	144	144	131	144	131	–	
5.06 ... 5.13	17.3 ... 17.5	5.1 (6)	n_{2N}	rpm	500	375	375	300	250	200	200	150	125	125	100	100	–	–	–	1F.2205-4AF..-0..0-Z
			M_{2N}	Nm	11.1	15.7	16.9	22	27.5	35	33	44.5	54	54	68	63	–	–	–	■■■ + ■■■ + . . .
			$M_{2,0}$	Nm	15.2	20	25.5	35.5	41	38	45.5	60	76	81	90	82	–	–	–	
			M_{2max}	Nm	52	69	87	104	80	61	155	144	131	144	144	131	–	–	–	
5.2 ... 5.26	17.2 ... 17.4	8.672 (10.272)	n_{2N}	rpm	500	375	300	200	200	–	200	125	100	100	75	–	–	–	–	1F.2206-2AF..-0..0-Z
			M_{2N}	Nm	10.6	15.3	20	30.5	31.5	–	29	49.5	62	62	84	–	–	–	–	■■■ + ■■■ + . . .
			$M_{2,0}$	Nm	15.6	20.5	26	36.5	42	–	46.5	62	78	83	90	–	–	–	–	
			M_{2max}	Nm	52	69	87	104	80	–	155	144	131	144	144	–	–	–	–	
10.2 ... 10.3	34.7 ... 35.2	15.972 (17.672)	n_{2N}	rpm	375	300	250	200	200	–	–	125	–	–	–	–	–	–	–	1F.2206-4AF..-0..0-Z
			M_{2N}	Nm	23.5	30.5	37.5	49	48.5	–	–	73	–	–	–	–	–	–	–	■■■ + ■■■ + . . .
			$M_{2,0}$	Nm	30.5	41	51	65	50	–	–	90	–	–	–	–	–	–	–	
			M_{2max}	Nm	105	140	131	104	79	–	–	144	–	–	–	–	–	–	–	

Planetary gearbox data

Gearbox type:		NRK090, 1-stage						NRK090, 2-stage								
1. Order code		B31						B32								
i		3	4	5	7	8	10	9	12	15	16	20	25	32	40	64
2. Order code		R03	R04	R05	R07	R08	R10	R09	R12	R15	R16	R20	R25	R32	R40	R64
$M_{2N,G}$	Nm	85	90	82	65	50	38	97	90	82	90	90	82	90	82	50
$M_{2max,G}$	Nm	136	144	131	104	80	61	155	144	131	144	144	131	144	131	80
$M_{2Em.Off}$	Nm	180	240	220	178	190	200	260	240	220	240	240	220	240	220	190
$J_{1,G}$	kg cm²	0.789	0.557	0.476	0.409	0.394	0.374	0.625	0.601	0.592	0.453	0.41	0.406	0.368	0.366	0.367
$\varphi_{2,G}$	'	7						9								

Color legend:		
	$M_{max,M} \times i < M_{2N,G}$	The motor and gearbox combination is fatigue-proof
	$M_{2N,G} < M_{max,M} \times i < M_{2max,G}$	Check acceleration and inertias, perform service life calculation if necessary
	$M_{max,M} \times i > M_{2max,G}$	The motor can destroy the gearbox, check acceleration and inertias, perform service life calculation if necessary

© Siemens 2022

Selection and ordering data

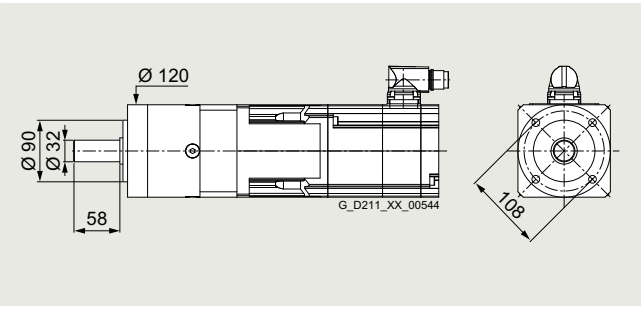

Permissible output shaft loads		
Average radial force for 20000 h	$F_{R,eq}$	2500 N
Average axial force for 20000 h	$F_{A,eq}$	4000 N
Average radial force for 30000 h	$F_{R,eq}$	2150 N
Average axial force for 30000 h	$F_{A,eq}$	3000 N
Maximum radial force	$F_{R,max}$	4000 N
Maximum axial force	$F_{A,max}$	5900 N

Servomotor data			Selection data servomotors with planetary gearbox																	Servomotors with planetary gearbox
$M_{0,M}$	M_{maxM}	J_M ($J_{M,Br}$)																		
Nm	Nm	kg cm²																		
SIMOTICS S-1FK2 and S-1FT2 High Dynamic servomotors with planetary gearbox NRK120 1 and 2-stage																				
0.969	3.41	0.35 (0.43)	n_{2N}	rpm	500	375	375	300	300	250	250	200	150	150	125	100	100	75	50	30	**1F.2104-4AF..-0..0-Z**
...	...		M_{2N}	Nm	2.25	3.45	4.25	6.2	6.8	8.8	7.3	9.7	13	13.6	17.6	22	24	34	51	88	■■■ + ■■■ + . . .
1.09	3.5		M_{2_0}	Nm	2.9	4	5.1	7.3	8.4	10.6	9.4	12.7	16	17.1	21	26.5	34.5	43	69	95	
			M_{2max}	Nm	10.2	13.7	17.2	24	27.5	34.5	31	41.5	52	55	69	86	111	138	192	152	
2.07	7.09	0.56 (0.65)	n_{2N}	rpm	500	375	375	300	250	200	200	150	125	125	100	100	75	60	37.5	–	**1F.2104-5AF..-0..0-Z**
...	...		M_{2N}	Nm	4.9	7.6	8.5	12.2	15.3	20	18.1	24.5	30.5	31.5	41	41	60	75	120	–	■■■ + ■■■ + . . .
2.17	7.17		M_{2_0}	Nm	6.2	8.4	10.6	15	17.2	21.5	19.2	25.5	32	34.5	43	54	69	86	120	–	
			M_{2max}	Nm	21	28	35.5	50	57	71	63	85	106	113	141	177	225	275	192	–	
2.82	9.5	0.76 (0.84)	n_{2N}	rpm	500	375	375	300	250	200	200	150	125	125	100	75	75	60	37.5	–	**1F.2104-6AF..-0..0-Z**
...	...		M_{2N}	Nm	6.2	9.5	10.5	14.9	18.7	24.5	22	30	37	37.5	49.5	65	71	89	120	–	■■■ + ■■■ + . . .
2.92	9.62		M_{2_0}	Nm	8.4	11.4	14.3	20	23	29	25.5	34.5	43	46	57	72	92	116	120	–	
			M_{2max}	Nm	28.5	38	47.5	67	76	96	85	114	142	152	190	235	300	275	192	–	
4.56	14.3	1.71 (2.55)	n_{2N}	rpm	500	375	375	250	250	200	200	150	125	125	100	75	60	50	–	–	**1F.2105-4AF..-0..0-Z**
...	...		M_{2N}	Nm	10.5	15.8	16.8	28	29	38	34.5	47	57	57	75	100	128	157	–	–	■■■ + ■■■ + . . .
4.64	14.5		M_{2_0}	Nm	13.6	18.3	23	32	37	46	41	55	69	73	92	115	147	172	–	–	
			M_{2max}	Nm	43	57	72	101	115	144	129	172	215	225	285	275	312	275	–	–	
7.52	23	2.65 (3.5)	n_{2N}	rpm	375	375	300	250	200	200	200	125	100	100	75	75	60	50	–	–	**1F.2105-6AF..-0..0-Z**
...	...		M_{2N}	Nm	18.8	21	28	36.5	46.5	47.5	43	71	89	90	121	124	161	172	–	–	■■■ + ■■■ + . . .
7.6	23.3		M_{2_0}	Nm	22.5	30	37.5	53	60	76	67	90	112	120	150	172	195	172	–	–	
			M_{2max}	Nm	69	93	116	163	186	152	205	275	275	312	312	275	312	275	–	–	
7.77	23.4	4.6 (6.3)	n_{2N}	rpm	500	375	300	250	200	200	200	125	100	100	75	75	60	–	–	–	**1F.2106-3AF..-0..0-Z**
...	...		M_{2N}	Nm	14.8	22	29.5	38	48.5	50	45	73	93	94	126	128	166	–	–	–	■■■ + ■■■ + . . .
7.88	23.7		M_{2_0}	Nm	23	31	39	55	62	78	70	93	116	124	155	172	195	–	–	–	
			M_{2max}	Nm	71	94	118	165	189	152	210	280	275	312	312	275	312	–	–	–	
10.1	31.1	6 (7.6)	n_{2N}	rpm	375	375	300	200	200	150	150	125	100	100	75	75	60	–	–	–	**1F.2106-4AF..-0..0-Z**
...	...		M_{2N}	Nm	24.5	26	35.5	56	58	79	71	87	109	109	148	142	184	–	–	–	■■■ + ■■■ + . . .
10.2	31.6		M_{2_0}	Nm	30.5	40.5	50	71	81	95	90	121	151	161	195	172	195	–	–	–	
			M_{2max}	Nm	94	126	157	216	192	152	251	312	275	312	312	275	310	–	–	–	

➥ Continued on the next page

Planetary gearbox data																	
Gearbox type:			NRK120, 1-stage						NRK120, 2-stage								
1. Order code			B41						B42								
	i		3	4	5	7	8	10	9	12	15	16	20	25	32	40	64	100
2. Order code			R03	R04	R05	R07	R08	R10	R09	R12	R15	R16	R20	R25	R32	R40	R64	R00
	$M_{2N,G}$	Nm	115	155	172	135	120	95	157	195	172	195	195	172	195	172	120	95
	$M_{2max,G}$	Nm	184	248	275	216	192	152	251	312	275	312	312	275	312	275	192	152
	$M_{2Em.Off}$	Nm	390	520	500	340	380	480	500	520	500	520	520	500	520	500	380	480
	$J_{1,G}$	kg cm²	2.76	2.05	1.77	1.55	1.5	1.42	2.33	2.25	2.22	1.76	1.58	1.57	1.42	1.42	1.42	1.38
	$\varphi_{2,G}$	'	7						9									

Color legend:		
	$M_{max,M} \times i < M_{2N,G}$	**The motor and gearbox combination is fatigue-proof**
	$M_{2N,G} < M_{max,M} \times i < M_{2max,G}$	**Check acceleration and inertias, perform service life calculation if necessary**
	$M_{max,M} \times i > M_{2max,G}$	**The motor can destroy the gearbox, check acceleration and inertias, perform service life calculation if necessary**

© Siemens 2022

SIMOTICS S-1FK2 and S-1FT2 servo planetary geared motors

for servo converters with line connection 400 V 3 AC

Gearbox type NRK120

Servomotor data $M_{0,M}$ Nm	M_{maxM} Nm	J_M ($J_{M,Br}$) kg cm²	Selection data servomotors with planetary gearbox																	Servomotors with planetary gearbox
SIMOTICS S-1FK2 and S-1FT2 High Dynamic servomotors with planetary gearbox NRK120 1 and 2-stage (continued)																				
14.3 ... 14.5	40.3 ... 40.9	8.7 (10.4)	n_{2N}	rpm	375	300	300	200	200	150	150	125	100	100	75	–	–	–	–	–	**1F.2106-6AF..-0..0-Z**
			M_{2N}	Nm	32	43	45	72	73	95	89	106	134	132	181	–	–	–	–	–	■■■ + ■■■ + . . .
			$M_{2,0}$	Nm	43	57	72	101	116	95	128	171	172	195	195	–	–	–	–	–	
			M_{2max}	Nm	122	163	200	216	192	152	251	312	275	312	312	–	–	–	–	–	
SIMOTICS S-1FK2 and S-1FT2 Compact servomotors with planetary gearbox NRK120 1 and 2-stage																				
2.03 ... 2.13	6.69 ... 6.76	1.23 (1.31)	n_{2N}	rpm	500	375	375	250	250	200	200	150	125	125	100	100	75	60	37.5	–	**1F.2204-5AF..-0..0-Z**
			M_{2N}	Nm	4.65	7.3	7.9	13.7	14.4	19	17.1	23	28.5	29.5	38.5	37.5	55	70	113	–	■■■ + ■■■ + . . .
			$M_{2,0}$	Nm	6	8.2	10.4	14.7	16.9	21	18.9	25	31.5	33.5	42	53	67	84	120	–	
			M_{2max}	Nm	20	26.5	33.5	47	54	67	60	80	100	107	133	167	210	265	192	–	
2.05 ... 2.14	6.69 ... 6.76	1.23 (1.31)	n_{2N}	rpm	500	375	375	250	250	200	200	150	125	125	100	100	75	60	37.5	–	**1F.2204-5AK..-0..0-Z**
			M_{2N}	Nm	4.8	7.5	8.1	14	14.8	19.4	17.6	24	29.5	30	40	38	57	71	116	–	■■■ + ■■■ + . . .
			$M_{2,0}$	Nm	6.1	8.3	10.4	14.8	17	21	19	25	31.5	34	42.5	53	68	85	120	–	
			M_{2max}	Nm	20	26.5	33.5	47	54	67	60	80	100	107	133	167	210	265	192	–	
2.81 ... 2.9	9 ... 9.11	1.61 (1.69)	n_{2N}	rpm	500	375	300	250	250	200	200	150	125	125	100	75	75	50	37.5	–	**1F.2204-6AF..-0..0-Z**
			M_{2N}	Nm	6.5	10.1	13.7	18.8	19.5	25.5	23	31.5	39	39.5	52	69	72	110	120	–	■■■ + ■■■ + . . .
			$M_{2,0}$	Nm	8.4	11.3	14.3	20	23	29	25.5	34.5	43	46	57	72	92	115	120	–	
			M_{2max}	Nm	27	36	45	63	72	91	81	108	135	144	180	225	285	275	192	–	
3.02 ... 3.11	10.2 ... 10.4	3.15 (4.05)	n_{2N}	rpm	500	375	375	300	250	200	200	150	125	125	100	75	75	60	37.5	–	**1F.2205-2AF..-0..0-Z**
			M_{2N}	Nm	6.5	9.8	10.7	14.9	19.1	25	22	29.5	36.5	38.5	49	63	70	89	120	–	■■■ + ■■■ + . . .
			$M_{2,0}$	Nm	9	12.1	15.3	21.5	24.5	31	27.5	36.5	46	49	61	76	98	123	120	–	
			M_{2max}	Nm	30.5	41	51	72	82	103	92	123	154	164	205	255	312	275	192	–	
5.21 ... 5.29	17.2 ... 17.4	5.1 (6)	n_{2N}	rpm	375	375	300	250	200	200	200	125	100	100	100	75	60	50	–	–	**1F.2205-4AF..-0..0-Z**
			M_{2N}	Nm	12.5	14	19.1	25	31.5	32.5	30	49.5	62	64	65	89	116	138	–	–	■■■ + ■■■ + . . .
			$M_{2,0}$	Nm	15.6	20.5	26	36.5	42	52	46.5	62	78	83	104	130	167	172	–	–	
			M_{2max}	Nm	52	69	86	121	139	152	155	205	255	275	312	275	312	275	–	–	
5.38 ... 5.46	17.2 ... 17.4	7.8 (9.4)	n_{2N}	rpm	500	375	300	250	250	200	200	150	125	100	100	75	60	–	–	–	**1F.2206-2AF..-0..0-Z**
			M_{2N}	Nm	11.2	16.8	22	29.5	29	38.5	35.5	48	58	69	75	102	133	–	–	–	■■■ + ■■■ + . . .
			$M_{2,0}$	Nm	16.1	21.5	27	38	43.5	54	48.5	64	80	86	107	134	172	–	–	–	
			M_{2max}	Nm	52	69	86	121	139	152	155	205	255	275	312	275	312	–	–	–	
10.5 ... 10.7	34.6 ... 35.1	15.1 (16.8)	n_{2N}	rpm	375	375	300	200	200	150	150	125	100	100	75	75	60	–	–	–	**1F.2206-4AF..-0..0-Z**
			M_{2N}	Nm	25	27	36	57	59	80	73	88	111	111	151	145	186	–	–	–	■■■ + ■■■ + . . .
			$M_{2,0}$	Nm	31.5	42.5	53	74	85	95	95	126	158	168	195	172	195	–	–	–	
			M_{2max}	Nm	105	140	175	216	192	152	251	312	275	312	312	275	310	–	–	–	
15.1 ... 15.4	49 ... 49.7	31.96 (35.36)	n_{2N}	rpm	375	250	250	150	150	125	125	100	75	75	60	–	–	–	–	–	**1F.2208-3AC..-0..0-Z**
			M_{2N}	Nm	28	44	45.5	79	81	95	92	115	154	153	192	–	–	–	–	–	■■■ + ■■■ + . . .
			$M_{2,0}$	Nm	45.5	61	76	107	120	95	136	181	172	195	195	–	–	–	–	–	
			M_{2max}	Nm	149	198	245	216	192	152	251	312	275	312	312	–	–	–	–	–	
18.8 ... 19.1	63.6 ... 64.5	41.16 (46.76)	n_{2N}	rpm	300	250	200	150	125	–	125	75	75	75	–	–	–	–	–	–	**1F.2208-4AC..-0..0-Z**
			M_{2N}	Nm	40.5	51	65	90	108	–	102	167	168	165	–	–	–	–	–	–	■■■ + ■■■ + . . .
			$M_{2,0}$	Nm	57	76	95	134	120	–	157	195	172	195	–	–	–	–	–	–	
			M_{2max}	Nm	184	248	275	216	192	–	251	312	270	310	–	–	–	–	–	–	

➥ Continued on the next page

Planetary gearbox data																	
Gearbox type:			NRK120, 1-stage						NRK120, 2-stage								
1. Order code			B41						B42								
	i		3	4	5	7	8	10	9	12	15	16	20	25	32	40	64	100
2. Order code			R03	R04	R05	R07	R08	R10	R09	R12	R15	R16	R20	R25	R32	R40	R64	R00
	$M_{2N,G}$	Nm	115	155	172	135	120	95	157	195	172	195	195	172	195	172	120	95
	$M_{2max,G}$	Nm	184	248	275	216	192	152	251	312	275	312	312	275	312	275	192	152
	$M_{2Em.Off}$	Nm	390	520	500	340	380	480	500	520	500	520	520	500	520	500	380	480
	$J_{1,G}$	kg cm²	2.76	2.05	1.77	1.55	1.5	1.42	2.33	2.25	2.22	1.76	1.58	1.57	1.42	1.42	1.42	1.38
	$\varphi_{2,G}$	'	7						9									

Color legend:		
	$M_{max,M} \times i < M_{2N,G}$	The motor and gearbox combination is fatigue-proof
	$M_{2N,G} < M_{max,M} \times i < M_{2max,G}$	Check acceleration and inertias, perform service life calculation if necessary
	$M_{max,M} \times i > M_{2max,G}$	The motor can destroy the gearbox, check acceleration and inertias, perform service life calculation if necessary

© Siemens 2022

Servomotor data

$M_{0,M}$	M_{maxM}	J_M ($J_{M,Br}$)
Nm	Nm	kg cm²
22.6 ... 22.9	77.2 ... 78.2	50.46 (55.96)

Selection data servomotors with planetary gearbox

Servomotors with planetary gearbox

SIMOTICS S-1FK2 and S-1FT2 Compact servomotors with planetary gearbox NRK120 1 and 2-stage (continued)

																		1F.2208-5AC..-0..0-Z
n_{2N}	rpm	300	250	200	150	125	–	100	75	–	–	–	–	–	–	–	–	■■■ + ■■■ + . . .
M_{2N}	Nm	45	55	71	98	118	–	138	183	–	–	–	–	–	–	–	–	
$M_{2,0}$	Nm	68	91	114	135	120	–	157	195	–	–	–	–	–	–	–	–	
M_{2max}	Nm	184	248	275	216	192	–	251	310	–	–	–	–	–	–	–	–	

Planetary gearbox data

Gearbox type:		**NRK120, 1-stage**						**NRK120, 2-stage**									
1. Order code		**B41**						**B42**									
i		**3**	**4**	**5**	**7**	**8**	**10**	**9**	**12**	**15**	**16**	**20**	**25**	**32**	**40**	**64**	**100**
2. Order code		**R03**	**R04**	**R05**	**R07**	**R08**	**R10**	**R09**	**R12**	**R15**	**R16**	**R20**	**R25**	**R32**	**R40**	**R64**	**R00**
$M_{2N,G}$	Nm	115	155	172	135	120	95	157	195	172	195	195	172	195	172	120	95
$M_{2max,G}$	Nm	184	248	275	216	192	152	251	312	275	312	312	275	312	275	192	152
$M_{2Em.Off}$	Nm	390	520	500	340	380	480	500	520	500	520	520	500	520	500	380	480
$J_{1,G}$	kg cm²	2.76	2.05	1.77	1.55	1.5	1.42	2.33	2.25	2.22	1.76	1.58	1.57	1.42	1.42	1.42	1.38
$\varphi_{2,G}$	'	7						9									

Color legend:		
	$M_{max,M} \times i < M_{2N,G}$	**The motor and gearbox combination is fatigue-proof**
	$M_{2N,G} < M_{max,M} \times i < M_{2max,G}$	**Check acceleration and inertias, perform service life calculation if necessary**
	$M_{max,M} \times i > M_{2max,G}$	**The motor can destroy the gearbox, check acceleration and inertias, perform service life calculation if necessary**

© Siemens 2022

SIMOTICS S-1FK2 and S-1FT2 servo planetary geared motors
for servo converters with line connection 400 V 3 AC

Gearbox type NRK155

Selection and ordering data

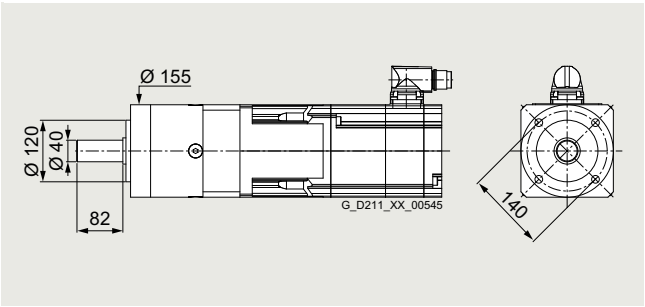

Permissible output shaft loads		
Average radial force for 20000 h	$F_{R,eq}$	5200 N
Average axial force for 20000 h	$F_{A,eq}$	7000 N
Average radial force for 30000 h	$F_{R,eq}$	4600 N
Average axial force for 30000 h	$F_{A,eq}$	6000 N
Maximum radial force	$F_{R,max}$	8400 N
Maximum axial force	$F_{A,max}$	11000 N

3 4

Servomotor data $M_{0,M}$ Nm	M_{maxM} Nm	J_M ($J_{M,Br}$) kg cm²	Selection data servomotors with planetary gearbox											Servomotors with planetary gearbox
SIMOTICS S-1FK2 and S-1FT2 High Dynamic servomotors with planetary gearbox NRK155 1 and 2-stage														
4.5 ... 4.58	14.3 ... 14.4	1.71 (2.55)	n_{2N}	rpm	375	300	200	100	100	75	50	37.5	–	**1F.2105-4AF..-0..0-Z**
			M_{2N}	Nm	15.1	20.5	39.5	65	71	98	161	205	–	■■■ + ■■■ + . . .
			M_{2_0}	Nm	18	22.5	45.5	72	91	113	182	225	–	
			M_{2max}	Nm	57	71	144	225	285	355	570	712	–	
7.47 ... 7.54	22.9 ... 23.2	2.65 (3.5)	n_{2N}	rpm	300	300	200	100	75	60	50	37.5	–	**1F.2105-6AF..-0..0-Z**
			M_{2N}	Nm	25.5	28.5	50	87	124	156	200	270	–	■■■ + ■■■ + . . .
			M_{2_0}	Nm	29.5	37	75	119	149	187	295	370	–	
			M_{2max}	Nm	92	116	230	365	455	570	736	712	–	
7.9 ... 8.04	23.4 ... 23.7	4.6 (6.3)	n_{2N}	rpm	375	300	200	100	75	60	50	37.5	–	**1F.2106-3AF..-0..0-Z**
			M_{2N}	Nm	21	29.5	52	91	128	161	205	280	–	■■■ + ■■■ + . . .
			M_{2_0}	Nm	31.5	39.5	80	126	158	197	315	395	–	
			M_{2max}	Nm	94	118	235	370	465	580	736	712	–	
10.3 ... 10.5	31.1 ... 31.5	6 (7.6)	n_{2N}	rpm	300	300	150	100	75	60	37.5	30	–	**1F.2106-4AF..-0..0-Z**
			M_{2N}	Nm	33	36	82	106	153	192	320	400	–	■■■ + ■■■ + . . .
			M_{2_0}	Nm	41.5	52	104	164	205	255	410	445	–	
			M_{2max}	Nm	125	157	310	495	620	712	736	712	–	
14.5 ... 14.8	40.2 ... 40.8	8.7 (10.4)	n_{2N}	rpm	300	250	150	75	75	60	37.5	37.5	–	**1F.2106-6AF..-0..0-Z**
			M_{2N}	Nm	43.5	56	107	179	189	235	400	380	–	■■■ + ■■■ + . . .
			M_{2_0}	Nm	59	73	148	230	290	360	460	445	–	
			M_{2max}	Nm	163	200	336	640	736	712	736	712	–	
SIMOTICS S-1FK2 and S-1FT2 Compact servomotors with planetary gearbox NRK155 1 and 2-stage														
3.07 ... 3.15	10.2 ... 10.3	3.15 (4.05)	n_{2N}	rpm	375	375	200	125	100	75	60	50	25	**1F.2205-2AF..-0..0-Z**
			M_{2N}	Nm	9.2	9.8	24.5	32.5	47.5	61	90	106	210	■■■ + ■■■ + . . .
			M_{2_0}	Nm	12.2	15.4	31.5	49.5	62	77	124	156	210	
			M_{2max}	Nm	40.5	51	103	163	200	255	405	510	336	
5.3 ... 5.39	17.1 ... 17.3	5.1 (6)	n_{2N}	rpm	300	300	200	100	75	60	50	37.5	–	**1F.2205-4AF..-0..0-Z**
			M_{2N}	Nm	17.1	19.2	34	61	87	109	146	196	–	■■■ + ■■■ + . . .
			M_{2_0}	Nm	21	26.5	53	84	106	132	210	265	–	
			M_{2max}	Nm	69	86	173	270	340	425	680	712	–	

➥ Continued on the next page

Planetary gearbox data										
Gearbox type:			NRK155, 1-stage			NRK155, 2-stage					
1. Order code			B51			B52					
	i		4	5	10	16	20	25	40	50	100
2. Order code			R04	R05	R10	R16	R20	R25	R40	R50	R00
	$M_{2N,G}$	Nm	460	445	210	460	460	445	460	445	210
	$M_{2max,G}$	Nm	736	712	336	736	736	712	736	712	336
	$M_{2Em.Off}$	Nm	920	890	420	920	920	890	920	890	420
	$J_{1,G}$	kg cm²	7.61	6.48	4.93	7.11	6.17	6.12	5.11	4.77	4.76
	$\varphi_{2,G}$	'	6			9					

Color legend:		
	$M_{max,M} \times i < M_{2N,G}$	The motor and gearbox combination is fatigue-proof
	$M_{2N,G} < M_{max,M} \times i < M_{2max,G}$	Check acceleration and inertias, perform service life calculation if necessary
	$M_{max,M} \times i > M_{2max,G}$	The motor can destroy the gearbox, check acceleration and inertias, perform service life calculation if necessary

© Siemens 2022

Servomotor data $M_{0,M}$ Nm	M_{maxM} Nm	J_M ($J_{M,Br}$) kg cm²	Selection data servomotors with planetary gearbox											Servomotors with planetary gearbox
SIMOTICS S-1FK2 and S-1FT2 Compact servomotors with planetary gearbox NRK155 1 and 2-stage (continued)														
5.46 ... 5.54	17.1 ... 17.3	7.8 (9.4)	n_{2N}	rpm	375	300	200	100	100	75	50	37.5	–	**1F.2206-2AF..-0..0-Z**
			M_{2N}	Nm	16	21.5	39.5	68	71	100	165	210	–	■■■ + ■■■ + . . .
			$M_{2,0}$	Nm	21.5	27	55	87	109	136	215	270	–	
			M_{2max}	Nm	69	86	173	270	340	425	680	712	–	
10.7 ... 10.9	34.5 ... 35	15.1 (16.8)	n_{2N}	rpm	300	300	150	100	75	60	37.5	30	–	**1F.2206-4AF..-0..0-Z**
			M_{2N}	Nm	34	37	84	108	155	195	325	405	–	■■■ + ■■■ + . . .
			$M_{2,0}$	Nm	43	54	109	171	210	265	425	445	–	
			M_{2max}	Nm	139	174	336	550	690	712	736	712	–	
15.5 ... 15.8	49 ... 49.7	29.6 (33)	n_{2N}	rpm	300	250	125	75	60	50	30	–	–	**1F.2208-3AC..-0..0-Z**
			M_{2N}	Nm	40.5	52	115	169	215	260	450	–	–	■■■ + ■■■ + . . .
			$M_{2,0}$	Nm	63	78	158	245	310	385	460	–	–	
			M_{2max}	Nm	198	245	336	736	736	712	736	–	–	
19.3 ... 19.6	63.4 ... 64.3	38.8 (44.4)	n_{2N}	rpm	250	200	125	75	60	50	37.5	–	–	**1F.2208-4AC..-0..0-Z**
			M_{2N}	Nm	56	73	129	186	240	285	365	–	–	■■■ + ■■■ + . . .
			$M_{2,0}$	Nm	78	98	196	305	385	445	460	–	–	
			M_{2max}	Nm	255	320	336	736	736	712	730	–	–	
23.1 ... 23.5	77 ... 78	48.1 (53.6)	n_{2N}	rpm	250	200	125	60	50	37.5	–	–	–	**1F.2208-5AC..-0..0-Z**
			M_{2N}	Nm	61	80	137	250	310	405	–	–	–	■■■ + ■■■ + . . .
			$M_{2,0}$	Nm	94	117	210	365	455	445	–	–	–	
			M_{2max}	Nm	310	390	336	736	736	712	–	–	–	
28.3 ... 28.7	86.5 ... 87.8	93.8 (99.8)	n_{2N}	rpm	250	200	100	60	50	37.5	–	–	–	**1F.2210-3AB..-0..0-Z**
			M_{2N}	Nm	73	96	200	290	355	445	–	–	–	■■■ + ■■■ + . . .
			$M_{2,0}$	Nm	114	143	210	450	460	445	–	–	–	
			M_{2max}	Nm	350	435	336	736	736	712	–	–	–	
28.3 ... 28.7	86.5 ... 87.8	93.8 (99.8)	n_{2N}	rpm	250	200	100	60	50	37.5	–	–	–	**1F.2210-3AC..-0..0-Z**
			M_{2N}	Nm	73	95	200	285	350	445	–	–	–	■■■ + ■■■ + . . .
			$M_{2,0}$	Nm	114	143	210	450	460	445	–	–	–	
			M_{2max}	Nm	350	435	336	736	736	710	–	–	–	
37.7 ... 38.5	116 ... 117	122 (138)	n_{2N}	rpm	200	200	100	50	50	–	–	–	–	**1F.2210-4AB..-0..0-Z**
			M_{2N}	Nm	105	107	210	385	380	–	–	–	–	■■■ + ■■■ + . . .
			$M_{2,0}$	Nm	153	192	210	460	460	–	–	–	–	
			M_{2max}	Nm	465	580	335	736	736	–	–	–	–	
37.1 ... 37.8	116 ... 117	122 (138)	n_{2N}	rpm	200	200	100	50	50	–	–	–	–	**1F.2210-4AC..-0..0-Z**
			M_{2N}	Nm	104	106	210	380	375	–	–	–	–	■■■ + ■■■ + . . .
			$M_{2,0}$	Nm	151	188	210	460	460	–	–	–	–	
			M_{2max}	Nm	465	580	335	736	736	–	–	–	–	
44 ... 44.9	145 ... 147	150 (166)	n_{2N}	rpm	200	150	–	50	–	–	–	–	–	**1F.2210-5AC..-0..0-Z**
			M_{2N}	Nm	114	154	–	410	–	–	–	–	–	■■■ + ■■■ + . . .
			$M_{2,0}$	Nm	179	220	–	460	–	–	–	–	–	
			M_{2max}	Nm	580	712	–	736	–	–	–	–	–	

Planetary gearbox data										
Gearbox type:			**NRK155, 1-stage**			**NRK155, 2-stage**				
1. Order code			**B51**			**B52**				
	i		**4**	**5**	**10**	**16**	**20**	**25**	**40**	**50**	**100**
2. Order code			**R04**	**R05**	**R10**	**R16**	**R20**	**R25**	**R40**	**R50**	**R00**
	$M_{2N,G}$	Nm	460	445	210	460	460	445	460	445	210
	$M_{2max,G}$	Nm	736	712	336	736	736	712	736	712	336
	$M_{2Em.Off}$	Nm	920	890	420	920	920	890	920	890	420
	$J_{1,G}$	kg cm²	7.61	6.48	4.93	7.11	6.17	6.12	5.11	4.77	4.76
	$\varphi_{2,G}$	'	6			9					

Color legend:		
	$M_{max,M} \times i < M_{2N,G}$	The motor and gearbox combination is fatigue-proof
	$M_{2N,G} < M_{max,M} \times i < M_{2max,G}$	Check acceleration and inertias, perform service life calculation if necessary
	$M_{max,M} \times i > M_{2max,G}$	The motor can destroy the gearbox, check acceleration and inertias, perform service life calculation if necessary

© Siemens 2022

Gearbox type NLC060

Selection and ordering data

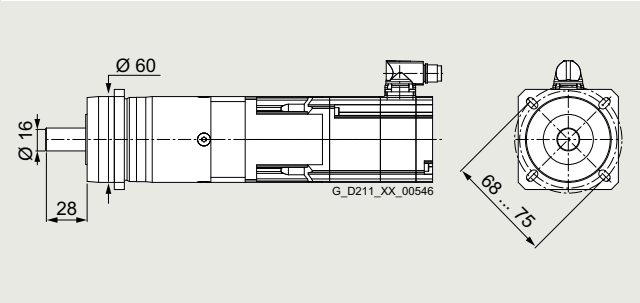

Permissible output shaft loads		
Average radial force for 20000 h	$F_{R,eq}$	3200 N
Average axial force for 20000 h	$F_{A,eq}$	4400 N
Average radial force for 30000 h	$F_{R,eq}$	3200 N
Average axial force for 30000 h	$F_{A,eq}$	3900 N
Maximum radial force	$F_{R,max}$	3200 N
Maximum axial force	$F_{A,max}$	4400 N

3 4

Servomotor data $M_{0,M}$ Nm	M_{maxM} Nm	J_M ($J_{M,Br}$) kg cm²	Selection data servomotors with planetary gearbox															Servomotors with planetary gearbox
SIMOTICS S-1FK2 and S-1FT2 High Dynamic servomotors with planetary gearbox NLC060 1 and 2-stage																		
1.01 ... 1.17	3.45 ... 3.58	0.371 (0.451)	n_{2N}	rpm	500	375	375	375	300	300	300	250	200	200	150	125	100	75	**1F.2104-4AF..-2..0-Z**
			M_{2N}	Nm	2	3.45	4.35	5.5	7.2	8.6	7.6	10.2	13.3	13.8	18.2	22.5	29	37.5	■■■ + ■■■ + . . .
			M_{2_0}	Nm	3	4.2	5.4	7.8	9	11.4	10.1	13.7	17.3	18.4	23	29	37	40	
			M_{2max}	Nm	10.3	13.9	17.6	24.5	28	24	31.5	42.5	53	56	70	64	70	64	
2.12 ... 2.26	7.14 ... 7.25	0.581 (0.671)	n_{2N}	rpm	375	375	375	300	300	300	250	200	200	150	150	125	100	–	**1F.2104-5AF..-2..0-Z**
			M_{2N}	Nm	5.4	6.8	7.9	12	12.7	13.1	15.5	21	22.5	29.5	32	40	44	–	■■■ + ■■■ + . . .
			M_{2_0}	Nm	6.3	8.6	10.9	15.5	17.8	15	19.9	26.5	33.5	35.5	44	40	44	–	
			M_{2max}	Nm	21	28.5	36	40	29	24	64	70	70	70	70	64	70	–	
2.87 ... 2.99	9.6 ... 9.69	0.781 (0.861)	n_{2N}	rpm	375	375	375	300	300	–	250	200	150	150	150	125	–	–	**1F.2104-6AF..-2..0-Z**
			M_{2N}	Nm	6.7	8.4	9.6	14.5	15.2	–	18.2	24.5	35	35.5	37	40	–	–	■■■ + ■■■ + . . .
			M_{2_0}	Nm	8.6	11.6	14.7	20.5	18	–	26.5	35.5	44	44	44	40	–	–	
			M_{2max}	Nm	28.5	38.5	48	40	29	–	70	70	70	70	70	64	–	–	
4.51 ... 4.61	14.4 ... 14.5	1.98 (2.82)	n_{2N}	rpm	375	300	300	250	–	–	200	150	150	125	–	–	–	–	**1F.2105-4AF..-0..0-Z**
			M_{2N}	Nm	10.6	15.4	17.1	22.5	–	–	28.5	40.5	39	44	–	–	–	–	■■■ + ■■■ + . . .
			M_{2_0}	Nm	13.5	18.2	22.5	25	–	–	41	44	44	44	–	–	–	–	
			M_{2max}	Nm	43	57	64	40	–	–	70	70	70	70	–	–	–	–	
6.96 ... 7.02	23.1 ... 23.3	2.92 (3.77)	n_{2N}	rpm	300	300	250	–	–	–	150	–	–	–	–	–	–	–	**1F.2105-6AF..-0..0-Z**
			M_{2N}	Nm	17.8	20.5	26.5	–	–	–	44	–	–	–	–	–	–	–	■■■ + ■■■ + . . .
			M_{2_0}	Nm	20.5	27.5	35	–	–	–	44	–	–	–	–	–	–	–	
			M_{2max}	Nm	45	61	64	–	–	–	70	–	–	–	–	–	–	–	

Planetary gearbox data																
Gearbox type:		**NLC060, 1-stage**						**NLC060, 2-stage**								
1. Order code		**C21**						**C22**								
i		**3**	**4**	**5**	**7**	**8**	**10**	**9**	**12**	**15**	**16**	**20**	**25**	**32**	**40**	
2. Order code		**R03**	**R04**	**R05**	**R07**	**R08**	**R10**	**R09**	**R12**	**R15**	**R16**	**R20**	**R25**	**R32**	**R40**	
$M_{2N,G}$	Nm	28	38	40	25	18	15	44	44	44	44	44	40	44	40	
$M_{2max,G}$	Nm	45	61	64	40	29	24	70	70	70	70	70	64	70	64	
$M_{2Em.Off}$	Nm	66	88	80	80	80	80	88	88	88	88	88	80	88	80	
$J_{1,G}$	kg cm²	0.178	0.12	0.097	0.078	0.074	0.069	0.135	0.129	0.081	0.091	0.079	0.078	0.068	0.067	
$\varphi_{2,G}$	'	10						12								

Color legend:		
	$M_{max,M} \times i < M_{2N,G}$	**The motor and gearbox combination is fatigue-proof**
	$M_{2N,G} < M_{max,M} \times i < M_{2max,G}$	**Check acceleration and inertias, perform service life calculation if necessary**
	$M_{max,M} \times i > M_{2max,G}$	**The motor can destroy the gearbox, check acceleration and inertias, perform service life calculation if necessary**

© Siemens 2022

Servomotor data $M_{0,M}$ Nm	M_{maxM} Nm	J_M ($J_{M,Br}$) kg cm²	Selection data servomotors with planetary gearbox																Servomotors with planetary gearbox
SIMOTICS S-1FK2 and S-1FT2 Compact servomotors with planetary gearbox NLC060 1 and 2-stage																			
2.08 ... 2.21	6.73 ... 6.84	1.251 (1.331)	n_{2N}	rpm	375	375	375	300	250	250	250	200	200	150	150	125	100	–	**1F.2204-5AF..-2..0-Z**
			M_{2N}	Nm	5.2	6.5	7.3	11.2	14.2	14.9	14.3	19.5	19.9	27.5	28.5	35.5	44	–	■■■ + ■■■ + . . .
			$M_{2,0}$	Nm	6.2	8.4	10.7	15.2	17.5	15	19.6	26	33	35	44	40	44	–	
			M_{2max}	Nm	20	27	33.5	40	29	24	60	70	70	70	70	64	70	–	
2.09 ... 2.23	6.73 ... 6.84	1.251 (1.331)	n_{2N}	rpm	375	375	300	300	250	250	250	200	150	150	125	125	100	–	**1F.2204-5AK..-2..0-Z**
			M_{2N}	Nm	5.3	6.6	9.4	11.4	14.5	15	14.6	19.9	27.5	28.5	35.5	36	44	–	■■■ + ■■■ + . . .
			$M_{2,0}$	Nm	6.2	8.5	10.8	15.3	17.6	15	19.7	26	33	35	44	40	44	–	
			M_{2max}	Nm	20	27	33.5	40	29	24	60	70	70	70	70	64	70	–	
2.85 ... 2.98	9.09 ... 9.18	1.631 (1.711)	n_{2N}	rpm	375	375	300	250	250	–	200	200	150	150	125	125	–	–	**1F.2204-6AF..-2..0-Z**
			M_{2N}	Nm	7.1	8.7	12.4	17.5	18	–	22.5	24	35.5	35.5	43.5	40	–	–	■■■ + ■■■ + . . .
			$M_{2,0}$	Nm	8.5	11.5	14.6	20.5	18	–	26.5	35.5	44	44	44	40	–	–	
			M_{2max}	Nm	27	36.5	45.5	40	29	–	70	70	70	70	70	64	–	–	
2.66 ... 2.78	10.3 ... 10.4	3.42 (4.32)	n_{2N}	rpm	375	375	300	250	250	–	200	150	150	125	100	–	–	–	**1F.2205-2AF..-0..0-Z**
			M_{2N}	Nm	6.7	7.6	11.3	15.5	15.4	–	20.5	27.5	29	36	44	–	–	–	■■■ + ■■■ + . . .
			$M_{2,0}$	Nm	7.9	10.8	13.6	19.3	18	–	24.5	33	41.5	43.5	44	–	–	–	
			M_{2max}	Nm	30.5	41	51	40	29	–	70	70	70	70	70	–	–	–	
4.69 ... 4.79	17.3 ... 17.4	5.37 (6.27)	n_{2N}	rpm	300	300	250	200	–	–	150	125	–	–	–	–	–	–	**1F.2205-4AF..-0..0-Z**
			M_{2N}	Nm	11.9	13.9	18.4	24.5	–	–	35	43.5	–	–	–	–	–	–	■■■ + ■■■ + . . .
			$M_{2,0}$	Nm	14	18.9	23.5	25	–	–	42.5	44	–	–	–	–	–	–	
			M_{2max}	Nm	45	61	64	40	–	–	70	70	–	–	–	–	–	–	

Planetary gearbox data																
Gearbox type:			**NLC060, 1-stage**						**NLC060, 2-stage**							
1. Order code			**C21**						**C22**							
	i		**3**	**4**	**5**	**7**	**8**	**10**	**9**	**12**	**15**	**16**	**20**	**25**	**32**	**40**
2. Order code			**R03**	**R04**	**R05**	**R07**	**R08**	**R10**	**R09**	**R12**	**R15**	**R16**	**R20**	**R25**	**R32**	**R40**
	$M_{2N,G}$	Nm	28	38	40	25	18	15	44	44	44	44	44	40	44	40
	$M_{2max,G}$	Nm	45	61	64	40	29	24	70	70	70	70	70	64	70	64
	$M_{2Em.Off}$	Nm	66	88	80	80	80	80	88	88	88	88	88	80	88	80
	$J_{1,G}$	kg cm²	0.178	0.12	0.097	0.078	0.074	0.069	0.135	0.129	0.081	0.091	0.079	0.078	0.068	0.067
	$\varphi_{2,G}$	'	10						12							

Color legend:		
	$M_{max,M} \times i < M_{2N,G}$	**The motor and gearbox combination is fatigue-proof**
	$M_{2N,G} < M_{max,M} \times i < M_{2max,G}$	**Check acceleration and inertias, perform service life calculation if necessary**
	$M_{max,M} \times i > M_{2max,G}$	**The motor can destroy the gearbox, check acceleration and inertias, perform service life calculation if necessary**

© Siemens 2022

Gearbox type NLC080

Selection and ordering data

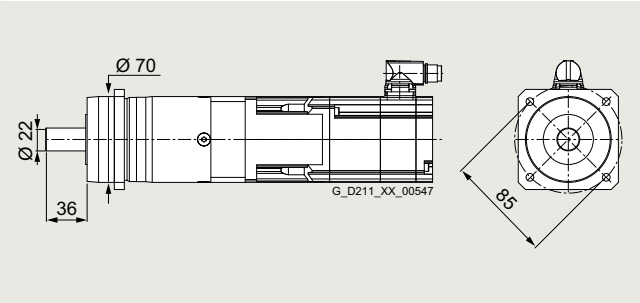

Permissible output shaft loads		
Average radial force for 20000 h	$F_{R,eq}$	5500 N
Average axial force for 20000 h	$F_{A,eq}$	6400 N
Average radial force for 30000 h	$F_{R,eq}$	4800 N
Average axial force for 30000 h	$F_{A,eq}$	5700 N
Maximum radial force	$F_{R,max}$	5500 N
Maximum axial force	$F_{A,max}$	6400 N

Servomotor data $M_{0,M}$ Nm	M_{maxM} Nm	J_M ($J_{M,Br}$) kg cm²	Selection data servomotors with planetary gearbox																	Servomotors with planetary gearbox
SIMOTICS S-1FK2 and S-1FT2 High Dynamic servomotors with planetary gearbox NLC080 1 and 2-stage																				
0.875 ... 1.14	3.31 ... 3.53	0.35 (0.43)	n_{2N}	rpm	375	375	375	300	300	300	300	250	200	200	150	125	100	75	50	**1F.2104-4AF..-2..0-Z**
			M_{2N}	Nm	2.1	3	3.85	5.9	6.7	7.8	7	9.4	12.2	12.7	17.3	21.5	28.5	37	50	■■■ + ■■■ + . . .
			M_{2_0}	Nm	2.6	3.75	4.95	7.3	8.4	10.8	9.5	13	16.5	17.6	22	28	36	45	50	
			M_{2max}	Nm	9.9	13.5	17.1	24	27.5	35	31	41.5	52	56	70	87	112	141	80	
1.98 ... 2.22	7 ... 7.18	0.56 (0.65)	n_{2N}	rpm	375	375	375	300	300	250	250	200	200	150	150	125	100	75	–	**1F.2104-5AF..-2..0-Z**
			M_{2N}	Nm	5.3	6.6	7.5	12.2	12.7	17.4	16.1	21.5	21	29.5	33.5	41	56	73	–	■■■ + ■■■ + . . .
			M_{2_0}	Nm	5.9	8.2	10.4	15	17.2	21.5	19.3	26	32.5	35	44	55	70	88	–	
			M_{2max}	Nm	21	28	35.5	50	57	61	64	85	107	114	142	176	192	176	–	
2.73 ... 2.96	9.46 ... 9.63	0.76 (0.84)	n_{2N}	rpm	375	375	300	300	250	250	250	200	150	150	125	100	100	75	–	**1F.2104-6AF..-2..0-Z**
			M_{2N}	Nm	6.8	8.3	12.2	14.9	19.3	20.5	19.4	26.5	37.5	37.5	48.5	62	66	91	–	■■■ + ■■■ + . . .
			M_{2_0}	Nm	8.1	11.2	14.2	20	23	29	26	35	43.5	46.5	58	73	94	110	–	
			M_{2max}	Nm	28	38	47.5	67	76	61	85	114	143	152	191	176	192	176	–	
4.47 ... 4.66	14.4 ... 14.5	1.71 (2.55)	n_{2N}	rpm	375	375	300	300	250	250	250	200	150	150	125	100	75	75	–	**1F.2105-4AF..-0..0-Z**
			M_{2N}	Nm	11.5	14	19.3	23	29.5	30	28	37	53	53	68	87	115	110	–	■■■ + ■■■ + . . .
			M_{2_0}	Nm	13.4	18.1	22.5	32	37	38	41	55	69	74	92	110	120	110	–	
			M_{2max}	Nm	43	57	72	101	80	61	129	172	176	192	192	176	192	176	–	
7.08 ... 7.25	23 ... 23.3	2.65 (3.5)	n_{2N}	rpm	375	300	300	250	200	–	200	150	125	100	100	100	–	–	–	**1F.2105-6AF..-0..0-Z**
			M_{2N}	Nm	16.7	24	26.5	37	48	–	47	65	81	95	104	96	–	–	–	■■■ + ■■■ + . . .
			M_{2_0}	Nm	21	28.5	35.5	50	50	–	64	85	107	114	120	110	–	–	–	
			M_{2max}	Nm	69	92	116	104	80	–	208	192	176	192	192	176	–	–	–	
7.18 ... 7.34	23.4 ... 23.7	5.472 (7.172)	n_{2N}	rpm	300	300	250	200	200	–	150	125	100	100	75	–	–	–	–	**1F.2106-3AF..-0..0-Z**
			M_{2N}	Nm	18.7	21	28.5	39.5	39.5	–	54	67	86	85	118	–	–	–	–	■■■ + ■■■ + . . .
			M_{2_0}	Nm	21.5	28.5	36	51	50	–	65	87	109	116	120	–	–	–	–	
			M_{2max}	Nm	70	94	118	104	80	–	208	192	176	192	192	–	–	–	–	
9.37 ... 9.53	31.1 ... 31.5	6.872 (8.472)	n_{2N}	rpm	300	250	250	200	200	–	150	125	100	100	75	–	–	–	–	**1F.2106-4AF..-0..0-Z**
			M_{2N}	Nm	23.5	31.5	34	47	45	–	64	76	98	94	120	–	–	–	–	■■■ + ■■■ + . . .
			M_{2_0}	Nm	28	37.5	47	65	50	–	84	112	110	120	120	–	–	–	–	
			M_{2max}	Nm	94	125	157	104	79	–	208	192	176	192	191	–	–	–	–	

Planetary gearbox data																
Gearbox type:			**NLC080, 1-stage**						**NLC080, 2-stage**							
1. Order code			**C31**						**C32**							
	i		**3**	**4**	**5**	**7**	**8**	**10**	**9**	**12**	**15**	**16**	**20**	**25**	**32**	**40**	**64**
2. Order code			**R03**	**R04**	**R05**	**R07**	**R08**	**R10**	**R09**	**R12**	**R15**	**R16**	**R20**	**R25**	**R32**	**R40**	**R64**
	$M_{2N,G}$	Nm	85	115	110	65	50	38	130	120	110	120	120	110	120	110	50
	$M_{2max,G}$	Nm	136	184	176	104	80	61	208	192	176	192	192	176	192	176	80
	$M_{2Em.Off}$	Nm	180	240	220	178	190	200	260	240	220	240	240	220	240	220	190
	$J_{1,G}$	kg cm²	0.775	0.54	0.466	0.401	0.387	0.37	0.641	0.615	0.607	0.46	0.415	0.412	0.37	0.368	0.369
	$\varphi_{2,G}$	'	7						9								

Color legend:		
	$M_{max,M} \times i < M_{2N,G}$	**The motor and gearbox combination is fatigue-proof**
	$M_{2N,G} < M_{max,M} \times i < M_{2max,G}$	**Check acceleration and inertias, perform service life calculation if necessary**
	$M_{max,M} \times i > M_{2max,G}$	**The motor can destroy the gearbox, check acceleration and inertias, perform service life calculation if necessary**

© Siemens 2022

Servomotor data $M_{0,M}$ Nm	M_{maxM} Nm	J_M ($J_{M,Br}$) kg cm²	Selection data servomotors with planetary gearbox																	Servomotors with planetary gearbox
SIMOTICS S-1FK2 and S-1FT2 Compact servomotors with planetary gearbox NLC080 1 and 2-stage																				
1.94 ... 2.18	6.59 ... 6.78	1.23 (1.31)	n_{2N}	rpm	375	375	300	300	250	250	250	200	150	150	150	125	100	75	–	**1F.2204-5AF..-2..0-Z**
			M_{2N}	Nm	5	6.3	8.9	11.3	14.3	15.9	15	20	26	27.5	30	37	50	66	–	■■■ + ■■■ + . . .
			$M_{2,0}$	Nm	5.8	8	10.2	14.7	16.9	21	19	25.5	32	34	43	54	69	87	–	
			M_{2max}	Nm	19.7	26.5	33	47	54	61	60	80	100	107	134	168	192	176	–	
1.95 ... 2.19	6.59 ... 6.78	1.23 (1.31)	n_{2N}	rpm	375	375	300	300	250	250	250	200	150	150	150	125	100	75	–	**1F.2204-5AK..-2..0-Z**
			M_{2N}	Nm	5.2	6.4	9.2	11.6	14.8	16.2	15.4	20.5	27	28.5	30.5	37.5	52	68	–	■■■ + ■■■ + . . .
			$M_{2,0}$	Nm	5.8	8	10.3	14.8	17	21.5	19.1	25.5	32	34.5	43	54	70	87	–	
			M_{2max}	Nm	19.7	26.5	33	47	54	61	60	80	100	107	134	168	192	176	–	
2.72 ... 2.94	8.96 ... 9.13	1.61 (1.69)	n_{2N}	rpm	375	375	300	250	250	200	250	200	150	150	125	100	100	75	–	**1F.2204-6AF..-2..0-Z**
			M_{2N}	Nm	7.3	8.7	12.9	18.6	20	26.5	19.6	26.5	38	38.5	49	63	63	89	–	■■■ + ■■■ + . . .
			$M_{2,0}$	Nm	8.1	11.1	14.1	20	23	29	25.5	34.5	43.5	46.5	58	73	94	110	–	
			M_{2max}	Nm	26.5	36	45	63	72	61	81	108	135	144	181	176	192	176	–	
2.67 ... 2.87	10.2 ... 10.4	3.15 (4.05)	n_{2N}	rpm	375	375	375	300	250	250	250	200	150	150	125	100	100	75	–	**1F.2205-2AF..-0..0-Z**
			M_{2N}	Nm	6.7	8.8	9.6	15.3	18.6	20.5	19.7	26	34	35.5	45	56	62	86	–	■■■ + ■■■ + . . .
			$M_{2,0}$	Nm	8	10.9	13.9	19.8	22.5	28.5	25	33.5	42.5	45	57	71	91	110	–	
			M_{2max}	Nm	30.5	41	51	72	80	61	92	123	154	164	192	176	192	176	–	
4.75 ... 4.94	17.2 ... 17.4	5.1 (6)	n_{2N}	rpm	375	300	300	250	200	200	200	150	125	125	100	100	75	–	–	**1F.2205-4AF..-0..0-Z**
			M_{2N}	Nm	11	16.2	18.3	25.5	32.5	36	34	47	58	60	77	75	110	–	–	■■■ + ■■■ + . . .
			$M_{2,0}$	Nm	14.2	19.2	24	34	39	38	43.5	58	73	77	97	110	120	–	–	
			M_{2max}	Nm	51	69	86	104	80	61	155	192	176	192	192	176	192	–	–	
4.9 ... 5.07	17.2 ... 17.3	8.672 (10.272)	n_{2N}	rpm	375	300	250	200	200	–	150	150	125	100	100	–	–	–	–	**1F.2206-2AF..-0..0-Z**
			M_{2N}	Nm	10.9	16.2	20.5	29	31	–	37.5	41	50	64	62	–	–	–	–	■■■ + ■■■ + . . .
			$M_{2,0}$	Nm	14.7	19.8	25	35	40.5	–	45	60	75	80	100	–	–	–	–	
			M_{2max}	Nm	51	69	86	104	80	–	154	192	176	192	192	–	–	–	–	
9.84 ... 9.99	34.6 ... 35	15.972 (17.672)	n_{2N}	rpm	300	250	250	200	200	–	150	100	100	100	75	–	–	–	–	**1F.2206-4AF..-0..0-Z**
			M_{2N}	Nm	24.5	33	35	48	46	–	65	100	100	96	120	–	–	–	–	■■■ + ■■■ + . . .
			$M_{2,0}$	Nm	29.5	39.5	49.5	65	50	–	88	118	110	120	120	–	–	–	–	
			M_{2max}	Nm	104	139	174	104	79	–	208	192	176	192	191	–	–	–	–	

Planetary gearbox data																
Gearbox type:		**NLC080, 1-stage**						**NLC080, 2-stage**								
1. Order code		**C31**						**C32**								
i		**3**	**4**	**5**	**7**	**8**	**10**	**9**	**12**	**15**	**16**	**20**	**25**	**32**	**40**	**64**
2. Order code		**R03**	**R04**	**R05**	**R07**	**R08**	**R10**	**R09**	**R12**	**R15**	**R16**	**R20**	**R25**	**R32**	**R40**	**R64**
$M_{2N,G}$	Nm	85	115	110	65	50	38	130	120	110	120	120	110	120	110	50
$M_{2max,G}$	Nm	136	184	176	104	80	61	208	192	176	192	192	176	192	176	80
$M_{2Em.Off}$	Nm	180	240	220	178	190	200	260	240	220	240	240	220	240	220	190
$J_{1,G}$	kg cm²	0.775	0.54	0.466	0.401	0.387	0.37	0.641	0.615	0.607	0.46	0.415	0.412	0.37	0.368	0.369
$\varphi_{2,G}$	'	7						9								

Color legend:		
	$M_{max,M} \times i < M_{2N,G}$	The motor and gearbox combination is fatigue-proof
	$M_{2N,G} < M_{max,M} \times i < M_{2max,G}$	Check acceleration and inertias, perform service life calculation if necessary
	$M_{max,M} \times i > M_{2max,G}$	The motor can destroy the gearbox, check acceleration and inertias, perform service life calculation if necessary

© Siemens 2022

Gearbox type NLC120

Selection and ordering data

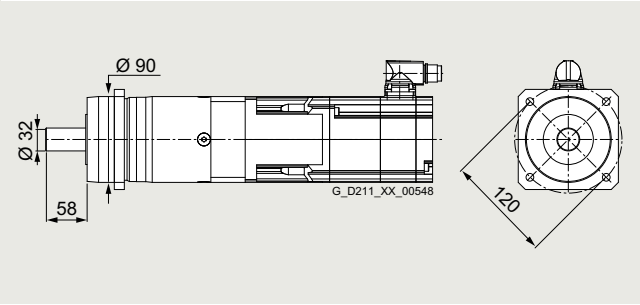

Permissible output shaft loads		
Average radial force for 20000 h	$F_{R,eq}$	6000 N
Average axial force for 20000 h	$F_{A,eq}$	8000 N
Average radial force for 30000 h	$F_{R,eq}$	5400 N
Average axial force for 30000 h	$F_{A,eq}$	7000 N
Maximum radial force	$F_{R,max}$	6000 N
Maximum axial force	$F_{A,max}$	8000 N

3 4

Servomotor data $M_{0,M}$ Nm	M_{maxM} Nm	J_M ($J_{M,Br}$) kg cm²	Selection data servomotors with planetary gearbox																		Servomotors with planetary gearbox
SIMOTICS S-1FK2 and S-1FT2 High Dynamic servomotors with planetary gearbox NLC120 1 and 2-stage																					
0.695 ... 1.08	3.13 ... 3.47	0.35 (0.43)	n_{2N}	rpm	375	300	300	250	250	200	200	150	150	150	125	100	100	75	50	30	**1F.2104-4AF..-0..0-Z**
			M_{2N}	Nm	1.51	2.6	3.5	5.5	6.3	8.6	7	10.1	11.6	11.9	16.4	21	23.5	34	54	90	■■■ + ■■■ + . . .
			M_{2_0}	Nm	2.05	3.15	4.3	6.5	7.6	9.8	8.6	11.9	15.2	16.3	20.5	26	33.5	42	68	95	
			M_{2max}	Nm	9.4	12.9	16.4	23.5	27	34	30	40.5	51	54	68	85	110	138	192	152	
1.8 ... 2.16	6.82 ... 7.09	0.56 (0.65)	n_{2N}	rpm	300	300	250	250	200	200	200	150	125	125	100	100	75	60	37.5	–	**1F.2104-5AF..-0..0-Z**
			M_{2N}	Nm	5.1	6.6	9.3	11.8	15.7	17.6	15.2	22	28	29	40	39	61	77	120	–	■■■ + ■■■ + . . .
			M_{2_0}	Nm	5.3	7.6	9.8	14.2	16.4	20.5	18.4	25	31.5	33.5	42	53	68	85	120	–	
			M_{2max}	Nm	20	27.5	34.5	49	56	70	63	84	105	112	141	176	225	280	192	–	
2.55 ... 2.89	9.28 ... 9.54	0.76 (0.84)	n_{2N}	rpm	300	300	250	250	200	200	200	150	125	125	100	75	75	60	50	–	**1F.2104-6AF..-0..0-Z**
			M_{2N}	Nm	6.8	8.4	11.8	14.6	19.5	21.5	18.6	27	34.5	35	48	65	72	92	97	–	■■■ + ■■■ + . . .
			M_{2_0}	Nm	7.6	10.6	13.5	19.4	22	28	25	33.5	42.5	45.5	57	71	92	115	120	–	
			M_{2max}	Nm	27.5	37	47	66	76	95	84	113	142	151	189	235	300	368	192	–	
4.29 ... 4.59	14.2 ... 14.4	1.71 (2.55)	n_{2N}	rpm	375	300	250	250	200	200	200	150	125	100	100	75	75	50	–	–	**1F.2105-4AF..-0..0-Z**
			M_{2N}	Nm	9.8	15	20	23.5	32	33.5	29.5	42.5	53	65	73	99	104	160	–	–	■■■ + ■■■ + . . .
			M_{2_0}	Nm	12.8	17.5	22	31.5	36	45.5	40.5	54	68	72	91	114	146	183	–	–	
			M_{2max}	Nm	42.5	57	71	100	115	144	128	171	210	225	285	355	416	368	–	–	
7.26 ... 7.52	23 ... 23.2	2.65 (3.5)	n_{2N}	rpm	300	300	250	200	200	150	150	125	100	100	75	75	60	50	–	–	**1F.2105-6AF..-0..0-Z**
			M_{2N}	Nm	17.6	20.5	27.5	40	42	59	53	67	87	88	122	124	165	199	–	–	■■■ + ■■■ + . . .
			M_{2_0}	Nm	21.5	29	37	52	59	75	66	89	112	119	149	187	240	230	–	–	
			M_{2max}	Nm	69	92	115	162	185	152	205	275	340	365	416	368	416	368	–	–	
7.64 ... 7.9	23.4 ... 23.6	4.6 (6.3)	n_{2N}	rpm	300	300	250	200	200	150	150	125	100	100	75	75	60	50	–	–	**1F.2106-3AF..-0..0-Z**
			M_{2N}	Nm	18.6	21.5	29	42	43.5	62	56	70	90	91	126	129	171	205	–	–	■■■ + ■■■ + . . .
			M_{2_0}	Nm	22.5	30.5	38.5	54	62	78	70	93	117	125	156	195	250	230	–	–	
			M_{2max}	Nm	70	94	117	165	188	152	210	280	350	370	416	368	416	365	–	–	
10 ... 10.3	31.1 ... 31.5	6 (7.6)	n_{2N}	rpm	300	250	250	200	200	150	150	125	100	100	75	60	50	–	–	–	**1F.2106-4AF..-0..0-Z**
			M_{2N}	Nm	23.5	32.5	36	51	52	75	67	83	107	106	149	189	235	–	–	–	■■■ + ■■■ + . . .
			M_{2_0}	Nm	30	40	50	71	81	95	91	121	152	162	200	230	260	–	–	–	
			M_{2max}	Nm	93	125	156	216	192	152	280	370	368	416	416	368	416	–	–	–	

➥ Continued on the next page

Planetary gearbox data																	
Gearbox type:			NLC120, 1-stage						NLC120, 2-stage								
1. Order code			C41						C42								
	i		3	4	5	7	8	10	9	12	15	16	20	25	32	40	64	100
2. Order code			R03	R04	R05	R07	R08	R10	R09	R12	R15	R16	R20	R25	R32	R40	R64	R00
	$M_{2N,G}$	Nm	115	155	195	135	120	95	210	260	230	260	260	230	260	230	120	95
	$M_{2max,G}$	Nm	184	248	312	216	192	152	336	416	368	416	416	368	416	368	192	152
	$M_{2Em.Off}$	Nm	390	520	500	340	380	480	500	520	500	520	520	500	520	500	380	480
	$J_{1,G}$	kg cm²	2.49	1.91	1.76	1.49	1.43	1.39	2.33	2.26	2.23	1.77	1.59	1.58	1.42	1.42	1.42	1.38
	$\varphi_{2,G}$	'	7						9									

Color legend:		
	$M_{max,M} \times i < M_{2N,G}$	**The motor and gearbox combination is fatigue-proof**
	$M_{2N,G} < M_{max,M} \times i < M_{2max,G}$	**Check acceleration and inertias, perform service life calculation if necessary**
	$M_{max,M} \times i > M_{2max,G}$	**The motor can destroy the gearbox, check acceleration and inertias, perform service life calculation if necessary**

© Siemens 2022

Servomotor data $M_{0,M}$ Nm	M_{maxM} Nm	J_M ($J_{M,Br}$) kg cm²	Selection data servomotors with planetary gearbox																	Servomotors with planetary gearbox
SIMOTICS S-1FK2 and S-1FT2 High Dynamic servomotors with planetary gearbox NLC120 1 and 2-stage (continued)																				
14.3 ... 14.6	40.3 ... 40.8	8.7 (10.4)	n_{2N}	rpm	300	250	250	200	150	150	150	100	100	75	75	60	60	–	–	–	**1F.2106-6AF..-0..0-Z**
			M_{2N}	Nm	31.5	42.5	46.5	65	88	95	84	128	131	174	183	230	225	–	–	–	■■■ + ■■■ + . . .
			$M_{2,0}$	Nm	43	57	72	101	116	95	129	172	215	230	260	230	260	–	–	–	
			M_{2max}	Nm	121	162	200	216	192	152	336	416	368	416	416	368	416	–	–	–	
SIMOTICS S-1FK2 and S-1FT2 Compact servomotors with planetary gearbox NLC120 1 and 2-stage																				
1.76 ... 2.11	6.41 ... 6.68	1.23 (1.31)	n_{2N}	rpm	300	300	250	250	200	200	200	150	125	125	100	75	75	60	37.5	–	**1F.2204-5AF..-0..0-Z**
			M_{2N}	Nm	4.95	6.3	9	11	15.1	16.3	14.3	21	26.5	27	37.5	49	56	72	119	–	■■■ + ■■■ + . . .
			$M_{2,0}$	Nm	5.2	7.4	9.5	13.9	16	20	18	24.5	30.5	33	41.5	52	67	84	120	–	
			M_{2max}	Nm	19.2	26	32.5	46	53	66	59	79	99	106	133	166	210	265	192	–	
1.77 ... 2.13	6.41 ... 6.68	1.23 (1.31)	n_{2N}	rpm	300	300	250	250	200	200	200	150	125	125	100	75	75	60	37.5	–	**1F.2204-5AK..-0..0-Z**
			M_{2N}	Nm	5	6.5	9.1	11.3	15.4	16.7	14.6	21.5	27.5	27.5	38.5	50	58	74	120	–	■■■ + ■■■ + . . .
			$M_{2,0}$	Nm	5.3	7.4	9.6	14	16.2	20.5	18.2	24.5	31	33	41.5	52	67	84	120	–	
			M_{2max}	Nm	19.2	26	32.5	46	53	66	59	79	99	106	133	166	210	265	192	–	
2.54 ... 2.88	8.77 ... 9.03	1.61 (1.69)	n_{2N}	rpm	300	300	250	250	200	200	200	150	125	100	100	75	75	60	37.5	–	**1F.2204-6AF..-0..0-Z**
			M_{2N}	Nm	7.2	9.1	12.8	15.3	20.5	22	19.4	28.5	36	43.5	50	68	74	95	120	–	■■■ + ■■■ + . . .
			$M_{2,0}$	Nm	7.6	10.5	13.4	19.3	22	28	25	33.5	42	45	56	71	91	114	120	–	
			M_{2max}	Nm	26	35	44.5	62	72	90	80	107	134	143	179	220	285	355	192	–	
2.79 ... 3.11	10 ... 10.3	3.15 (4.05)	n_{2N}	rpm	375	300	300	250	200	200	200	150	125	125	100	75	75	60	37.5	–	**1F.2205-2AF..-0..0-Z**
			M_{2N}	Nm	5.7	9	10.3	15.1	19.7	21.5	19.3	28	35	35.5	48.5	62	72	92	120	–	■■■ + ■■■ + . . .
			$M_{2,0}$	Nm	8.3	11.5	14.7	21	24	30.5	27	36.5	45.5	49	61	77	99	124	120	–	
			M_{2max}	Nm	30	40.5	50	71	82	102	91	122	153	163	200	255	325	368	192	–	
5.01 ... 5.28	17.1 ... 17.3	5.1 (6)	n_{2N}	rpm	300	250	250	200	200	150	150	125	100	100	75	75	60	50	–	–	**1F.2205-4AF..-0..0-Z**
			M_{2N}	Nm	11.4	16	18.4	27	28	40.5	37	47	61	62	86	89	119	144	–	–	■■■ + ■■■ + . . .
			$M_{2,0}$	Nm	15	20	25.5	36.5	42	52	46.5	62	78	83	104	131	168	210	–	–	
			M_{2max}	Nm	51	68	86	120	138	152	154	205	255	270	340	368	416	368	–	–	
5.18 ... 5.45	17.1 ... 17.3	7.8 (9.4)	n_{2N}	rpm	375	300	250	200	200	150	200	150	125	100	100	75	60	50	–	–	**1F.2206-2AF..-0..0-Z**
			M_{2N}	Nm	10.9	16.3	21.5	30.5	33.5	44.5	30	43.5	54	68	73	102	134	164	–	–	■■■ + ■■■ + . . .
			$M_{2,0}$	Nm	15.5	21	26.5	37.5	43	54	48	64	81	86	108	135	173	215	–	–	
			M_{2max}	Nm	51	68	86	120	138	152	154	205	255	270	340	368	416	368	–	–	
10.5 ... 10.7	34.6 ... 35	15.1 (16.8)	n_{2N}	rpm	300	300	250	200	200	150	150	125	100	100	75	60	50	–	–	–	**1F.2206-4AF..-0..0-Z**
			M_{2N}	Nm	24	27.5	36.5	52	53	76	68	84	109	108	152	191	240	–	–	–	■■■ + ■■■ + . . .
			$M_{2,0}$	Nm	31	42	53	74	85	95	95	127	159	169	210	230	260	–	–	–	
			M_{2max}	Nm	104	139	174	216	192	152	310	415	368	416	416	368	416	–	–	–	
15.3 ... 15.5	48.9 ... 49.6	31.96 (35.36)	n_{2N}	rpm	300	250	200	150	150	125	125	100	75	75	60	50	–	–	–	–	**1F.2208-3AC..-0..0-Z**
			M_{2N}	Nm	28.5	38	51	75	77	94	89	113	154	154	198	230	–	–	–	–	■■■ + ■■■ + . . .
			$M_{2,0}$	Nm	45.5	61	76	108	120	95	137	183	225	240	260	230	–	–	–	–	
			M_{2max}	Nm	148	197	245	216	192	152	336	416	368	416	416	368	–	–	–	–	
19 ... 19.2	63.4 ... 64.2	41.16 (46.76)	n_{2N}	rpm	250	200	200	150	125	–	100	75	75	60	60	–	–	–	–	–	**1F.2208-4AC..-0..0-Z**
			M_{2N}	Nm	40.5	55	59	85	105	–	124	168	170	210	210	–	–	–	–	–	■■■ + ■■■ + . . .
			$M_{2,0}$	Nm	57	76	95	134	120	–	170	225	230	260	260	–	–	–	–	–	
			M_{2max}	Nm	184	248	312	216	192	–	336	416	368	416	416	–	–	–	–	–	

➥ Continued on the next page

Planetary gearbox data																
Gearbox type:			NLC120, 1-stage						NLC120, 2-stage							
1. Order code			C41						C42							
	i		3	4	5	7	8	10	9	12	15	16	20	25	32	40	64	100
2. Order code			R03	R04	R05	R07	R08	R10	R09	R12	R15	R16	R20	R25	R32	R40	R64	R00
	$M_{2N,G}$	Nm	115	155	195	135	120	95	210	260	230	260	260	230	260	230	120	95
	$M_{2max,G}$	Nm	184	248	312	216	192	152	336	416	368	416	416	368	416	368	192	152
	$M_{2Em.Off}$	Nm	390	520	500	340	380	480	500	520	500	520	520	500	520	500	380	480
	$J_{1,G}$	kg cm²	2.49	1.91	1.76	1.49	1.43	1.39	2.33	2.26	2.23	1.77	1.59	1.58	1.42	1.42	1.42	1.38
	$\varphi_{2,G}$	'	7						9									

Color legend:		
	$M_{max,M} \times i < M_{2N,G}$	The motor and gearbox combination is fatigue-proof
	$M_{2N,G} < M_{max,M} \times i < M_{2max,G}$	Check acceleration and inertias, perform service life calculation if necessary
	$M_{max,M} \times i > M_{2max,G}$	The motor can destroy the gearbox, check acceleration and inertias, perform service life calculation if necessary

© Siemens 2022

Gearbox type NLC120

Servomotor data

$M_{0,M}$	M_{maxM}	J_M ($J_{M,Br}$)
Nm	Nm	kg cm²
22.8 ... 23.1	77 ... 77.9	50.46 (55.96)

Selection data servomotors with planetary gearbox

Servomotors with planetary gearbox

SIMOTICS S-1FK2 and S-1FT2 Compact servomotors with planetary gearbox NLC120 1 and 2-stage (continued)

n_{2N}	rpm	250	200	200	125	125	–	100	75	60	60	–	–	–	–	–	–	**1F.2208-5AC..-0..0-Z**
M_{2N}	Nm	46	62	63	111	114	–	136	183	225	230	–	–	–	–	–	–	■■■ + ■■■ + . . .
$M_{2,0}$	Nm	68	91	115	135	120	–	205	260	230	260	–	–	–	–	–	–	
M_{2max}	Nm	184	248	312	216	192	–	336	416	368	415	–	–	–	–	–	–	

Planetary gearbox data

Gearbox type:		**NLC120, 1-stage**						**NLC120, 2-stage**									
1. Order code		**C41**						**C42**									
i		**3**	**4**	**5**	**7**	**8**	**10**	**9**	**12**	**15**	**16**	**20**	**25**	**32**	**40**	**64**	**100**
2. Order code		**R03**	**R04**	**R05**	**R07**	**R08**	**R10**	**R09**	**R12**	**R15**	**R16**	**R20**	**R25**	**R32**	**R40**	**R64**	**R00**
$M_{2N,G}$	Nm	115	155	195	135	120	95	210	260	230	260	260	230	260	230	120	95
$M_{2max,G}$	Nm	184	248	312	216	192	152	336	416	368	416	416	368	416	368	192	152
$M_{2Em.Off}$	Nm	390	520	500	340	380	480	500	520	500	520	520	500	520	500	380	480
$J_{1,G}$	kg cm²	2.49	1.91	1.76	1.49	1.43	1.39	2.33	2.26	2.23	1.77	1.59	1.58	1.42	1.42	1.42	1.38
$\varphi_{2,G}$	'	7						9									

Color legend:		
	$M_{max,M} \times i < M_{2N,G}$	**The motor and gearbox combination is fatigue-proof**
	$M_{2N,G} < M_{max,M} \times i < M_{2max,G}$	**Check acceleration and inertias, perform service life calculation if necessary**
	$M_{max,M} \times i > M_{2max,G}$	**The motor can destroy the gearbox, check acceleration and inertias, perform service life calculation if necessary**

© Siemens 2022

4/2 **MOTION-CONNECT connection systems**
4/2 Overview
4/2 Benefits
4/2 Application
4/2 Function
4/3 Characteristic curves
4/4 More information

4/5 **One Cable Connection (OCC) technology for SINAMICS S210**
4/5 Overview
4/5 Technical specifications
4/6 Selection and ordering data
4/10 More information

Detailed technical information on the SINAMICS S210 servo drive system is available on the internet at:
www.siemens.com/sinamics-s210/documentation

In addition, the Drive Technology Configurator (DT Configurator) can be used on the internet at the following address:
www.siemens.com/sinamics-s210/configuration

© Siemens 2022

MOTION-CONNECT connection systems

Overview

MOTION-CONNECT cables are suitable for use with many different types of machine tools and production machinery.

The following variants of MOTION-CONNECT cable are available as fully-assembled power and signal cables or sold by the meter:

- **MOTION-CONNECT 500**
  - Cost-effective solution for predominantly fixed installation
  - Suitable for low mechanical loading
  - Tested for traversing paths up to 5 m (16.4 ft)
- **MOTION-CONNECT 800PLUS**
  - Meets requirements for use in cable carriers
  - Suitable for high mechanical loading
  - Oil resistance
  - Tested for traversing paths of up to 50 m (164 ft)
- **MOTION-CONNECT 400 (only for SIMOTICS S-1FS2 motors)**
  - Extremely chemically resistant FEP jacket (especially against common cleaning agents and disinfectants used in the F&B industry)
  - With integrated pressure compensation tube
  - Not suitable for repeated bending stress!

Benefits

Pre-assembled MOTION-CONNECT cables provide high quality and impeccable system-tested functionality.

SPEED-CONNECT

Connectors with SPEED-CONNECT quick-release locks enable fast, stable and reliable connection. All that is required to attain stable interlocking and a secure connection is less than a quarter turn of the lock nut of the connector. Tools are not required.

Cables with SPEED-CONNECT connectors supplement the previous offering of MOTION-CONNECT cables with full-thread connectors.

Application

MOTION-CONNECT cables are designed for machinery use. They are not suitable for building technology applications or outdoor installation.

MOTION-CONNECT cables have been tested in a cable carrier with horizontal traversing path and have also been designed for this type of application. They are not self-supporting.

The pre-assembled cables can be ordered in length units of 10 cm (3.94 in) and can be extended, if necessary.

When cable lengths (basic cables and extensions) are determined for the systems and applications described in this catalog, the technically permissible maximum cable lengths (e.g. 25 m (82 ft)) specified in the catalog must be observed. Malfunctions can occur if longer cables are used. Siemens assumes no liability for correct transmission of signals or power in this case.

Function

The cables must be removed from the drum without twisting, i.e., the cables must be unwound and must never be lifted over the drum flange in loops.

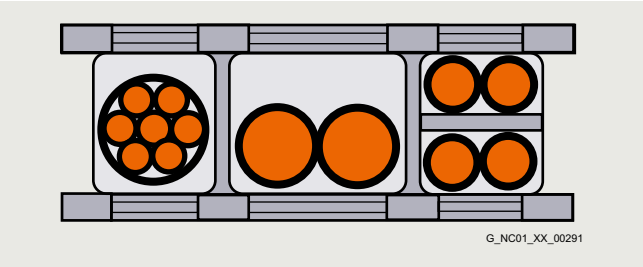

To maximize the service life of the cable carrier and cables, cables in the carrier made from different materials must be separated by spacers in the cable carrier. The spacers must be filled evenly to ensure that the position of the cables does not change during operation. The cables should be distributed as symmetrically as possible according to their weights and dimensions. Cables with very different outer diameters should also be separated by spacers.

When inserting pre-assembled cables into the cable carrier, do not pull at the connector, as this may damage the strain relief or cable clamping.

The cables must not be fixed in the cable carrier. They must be freely movable.

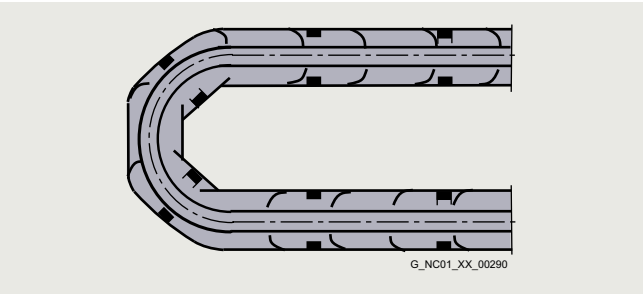

The cables must be able to be moved without applying force in particular in the bending radii of the carrier. The specified minimum bending radius must be adhered to.

© Siemens 2022

Function

The cable fixings must be attached at both ends at an appropriate distance away from the end points of the moving parts in a dead zone.

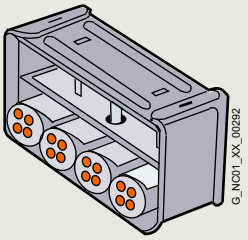

MOTION-CONNECT cables are tested in a cable carrier. The cables are attached at one end by means of strain relief to the moving ends of the cable carrier. Strain relief is applied over a wide area of the cable jacket surface without crimping the cable.

Cables must be installed in accordance with the instructions supplied by the cable carrier manufacturer.

Note:

If, for example, pre-assembled cables are installed in a cable carrier in such a way that the connector would inhibit assembly, pre-assembled cables without assembled connector can also be supplied (power and signal cables [1]). Depending on the version, the contacts of the cables are crimped and the connector is supplied separately. After installing the cables, the customer assembles the connector.

In case of vibration load and with horizontal or vertical cable entries, we recommend that the cable is additionally fixed if between the cable strain relief on the cable carrier and the terminal at the motor part of the cable is hanging loose or is not routed. To prevent machine vibrations being transmitted to the connectors, the cable should be fixed at the moving part where the motor is mounted.

Characteristic curves

Characteristic curve for MOTION-CONNECT 800PLUS

The blue area beneath the characteristic curve represents the potential range of use for the cables. The characteristic curve represents the tested operating points.

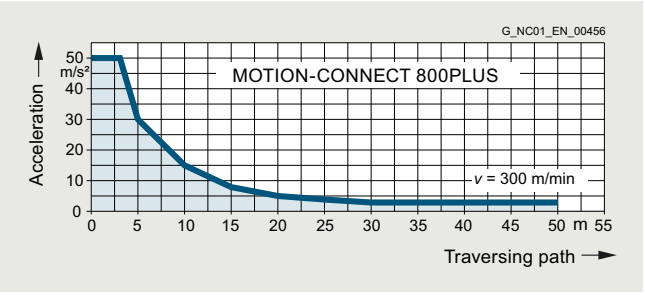

Permissible acceleration for MOTION-CONNECT 800PLUS signal and power cables up to 16 mm^2

4

[1] Not for DRIVE-CLiQ signal cables.

© Siemens 2022

More information

Current carrying capacity for power and signal cables

The current carrying capacity of PVC/PUR-insulated copper cables is specified in the table for installation types B1, B2, C, and E under continuous operating conditions with reference to an ambient air temperature of 40 °C (104 °F). For other ambient temperatures, the values must be corrected by the derating factors from the table.

Cross-section	Current carrying capacity rms AC 50/60 Hz or DC in amps for installation type			
	B1 Single-core cables in conduits or installation ducts	B2 Multi-core cables in conduits or installation ducts	C Multi-core cables, vertically or horizontally on walls/open, without conduits and installation ducts/ with contact	E Multi-core cables, horizontally or vertically on perforated cable racks/open, without conduits and installation ducts/ with contact
mm^2				
Electronics [1]				
0.2	–	4.3	4.4	4.4
0.5	–	7.5	7.5	7.8
0.75	–	9	9.5	10
Power [2]				
0.38	6.2	6.1	7.1	7.4
0.75	8.6	8.5	9.8	10.4
1	10.3	10.1	11.7	12.4
1.5	13.5	13.1	15.2	16.1
2.5	18.3	17.4	21	22
4	24	23	28	30
6	31	30	36	37
10	44	40	50	52
16	59	54	66	70

Derating factors for PVC/PUR-insulated power and signal cables

Ambient air temperature °C (°F)	Derating factor acc. to EN 60204-1, Table D.1
30 (86)	1.15
35 (95)	1.08
40 (104)	1
45 (113)	0.91
50 (122)	0.82
55 (131)	0.71
60 (140)	0.58

Note:

Derating for MOTION-CONNECT 400 analog acc. to EN 60204-1.

[1] One control circuit pair.

[2] One symmetrically loaded three-phase AC cable.

© Siemens 2022

Overview

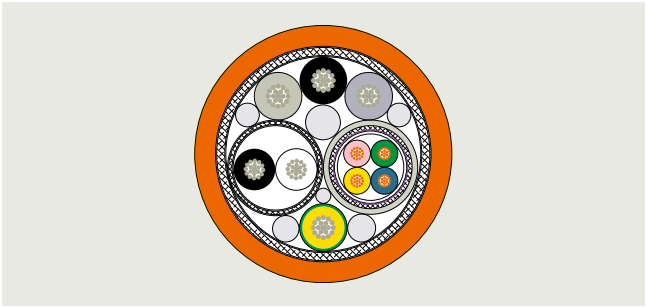

Motor and converter are simply connected to one another by one cable instead of the usual two or three cables. With this One Cable Technology, energy supply, encoder signals and braking signal are brought together in a single cable.

This results in the following advantages:

- Time-saving by laying only one cable
- Smaller installation space and space requirement in cable collars
- Only one cable has to be cleaned. This is advantageous, e.g. in the pharmaceutical industry and where higher requirements are placed upon hygiene
- Can be ordered to the decimeter
- Compact connection system
- Rotatable connectors on the motor side
- Motor with very low interfering contour for restricted installation space
- Bending radius optimized to 2.5 × cable diameter static or 4 × cable diameter dynamic for MOTION-CONNECT 800PLUS

Technical specifications

MOTION-CONNECT 500	6FX5002-8QN04-1...	6FX5002-8QN08-1...	6FX5002-8QN11-1...	6FX5002-8QN21-1...
Cable jacket material	PVC	PVC	PVC	PVC
Connector • Converter side • Motor side	 Siemens IX M12 (SPEED-CONNECT)	 Siemens IX M17 (SPEED-CONNECT)	 Siemens IX M23 (SPEED-CONNECT)	 Siemens IX M23 (SPEED-CONNECT)
Number of cores	10	10	10	10
Cross-section	0.38 mm^2	0.75 mm^2	1.5 mm^2	2.5 mm^2
Cable length, max.	50 m (164 ft)	50 m (164 ft)	50 m (164 ft)	50 m (164 ft)
Cable structure	4G0.38+1Q0.2+1P0.38	4G0.75+1Q0.2+1P0.5	4G1.5+1Q0.2+1P1.5	4G2.5+1Q0.2+1P1.5
Max. number of bends	100000	100000	100000	100000
Number of disconnection points, max.	3 in 50 m (3 in 164 ft)	3 in 50 m (3 in 164 ft)	3 in 50 m (3 in 164 ft)	3 in 50 m (3 in 164 ft)
Degree of protection • Converter side • Motor side	 IP20 IP67	 IP20 IP67	 IP20 IP67	 IP20 IP67
Certificates of suitability	RoHS, cURus, CE	RoHS, cURus, CE	RoHS, cURus, CE	RoHS, cURus, CE
Suitable for SIMOTICS S-1FK2/ S-1FT2/S-1FS2 servomotors	1F.2102, 1F.2 . 03	1F.2 . 04, 1F.2 . 05	1F.2 . 06, 1F.2208, 1F.2210	1F.2 . 06, 1F.2208, 1F.2210

MOTION-CONNECT 800PLUS	6FX8002-8QN04-1...	6FX8002-8QN08-1...	6FX8002-8QN11-1...	6FX8002-8QN21-1...
Cable jacket material	PUR	PUR	PUR	PUR
Connector • Converter side • Motor side	 Siemens IX M12 (SPEED-CONNECT)	 Siemens IX M17 (SPEED-CONNECT)	 Siemens IX M23 (SPEED-CONNECT)	 Siemens IX M23 (SPEED-CONNECT)
Number of cores	10	10	10	10
Cross-section	0.38 mm^2	0.75 mm^2	1.5 mm^2	2.5 mm^2
Cable length, max.	50 m (164 ft)	50 m (164 ft)	50 m (164 ft)	50 m (164 ft)
Cable structure	4G0.38+1Q0.2+1P0.38	4G0.75+1Q0.2+1P0.5	4G1.5+1Q0.2+1P1.5	4G2.5+1Q0.2+1P1.5
Max. number of bends	10 million	10 million	10 million	10 million
Number of disconnection points, max.	3 in 50 m (3 in 164 ft)	3 in 50 m (3 in 164 ft)	3 in 50 m (3 in 164 ft)	3 in 50 m (3 in 164 ft)
Degree of protection • Converter side • Motor side	 IP20 IP67	 IP20 IP67	 IP20 IP67	 IP20 IP67
Certificates of suitability	RoHS, cURus, CE	RoHS, cURus, CE	RoHS, cURus, CE	RoHS, cURus, CE
Suitable for SIMOTICS S-1FK2/ S-1FT2/S-1FS2 servomotors	1F.2102, 1F.2 . 03	1F.2 . 04, 1F.2 . 05	1F.2 . 06, 1F.2208, 1F.2210	1F.2 . 06, 1F.2208, 1F.2210

© Siemens 2022

One Cable Connection (OCC) technology for SINAMICS S210

Technical specifications

MOTION-CONNECT 400	6FX4002-8QN08-1...	6FX4002-8QN11-1...
Cable jacket material	FEP	FEP
Connector • Converter side • Motor side	 Siemens IX M17 (SPEED-CONNECT)	 Siemens IX M23 (SPEED-CONNECT)
Number of cores	10	10
Cross-section	0.75 mm^2	1.5 mm^2
Cable length, max.	50 m (164 ft)	50 m (164 ft)
Cable structure	4x0.75+4x0.34+2x0.5C C	4x1.5+4x0.34+2x0.5C C
Max. number of bends	Not suitable for bending loads	Not suitable for bending loads
Number of disconnection points, max.	3 in 50 m (3 in 164 ft)	3 in 50 m (3 in 164 ft)
Degree of protection • Converter side • Motor side	 IP20 IP67	 IP20 IP67
Certificates of suitability	RoHS, cURus, CE	RoHS, cURus, CE
Suitable for SIMOTICS S-1FS2 servomotors	1FS2104, 1FS2105	1FS2106, 1FS2208

Selection and ordering data

4

Motor connection cable

Version	Description	Connector size	Cross-section mm^2	D_{max} mm (in)	r_{static} mm (in)	$r_{dynamic}$ mm (in)	For motor (Possible for 1FS2 with Q1x)	Article No. (Length code see table)
	Pre-assembled OCC motor connection cable MOTION-CONNECT 500 for predominantly fixed routing with SPEED-CONNECT connector on the motor side and Siemens IX pre-assembled signal connector for the converter side (shield clamp included in the scope of delivery)	M12	0.38	9.7 (0.38)	23.5 (0.93)	195 (7.68)	1FK2102, 1FK2.03-..G 1FT2102, 1FT2.03-..G	**6FX5002-8QN04-1■■■**
		M17	0.75	10.5 (0.41)	25.5 (1.00)	195 (7.68)	1FK2103-..H, 1FK2203-..K, 1FK2.04, 1FK2.05 1FT2103-..H, 1FT2203-..K, 1FT2.04, 1FT2.05 1FS2104, 1FS2105	**6FX5002-8QN08-1■■■**
		M23	1.5	12.7 (0.50)	30.7 (1.21)	195 (7.68)	1FK2.06, 1FK2208, 1FK2210 1FT2.06, 1FT2208, 1FT2210 1FS2106, 1FS2208	**6FX5002-8QN11-1■■■**
		M23	2.5 [1]	13.7 (0.54)	30.7 (1.21)	195 (7.68)	1FK2.06, 1FK2208, 1FK2210 1FT2.06, 1FT2208, 1FT2210	**6FX5002-8QN21-1■■■**
	Pre-assembled OCC motor connection cable MOTION-CONNECT 800PLUS for use with cable carriers with SPEED-CONNECT connector on the motor side and Siemens IX pre-assembled signal connector for the converter side (shield clamp included in the scope of delivery)	M12	0.38	9.7 (0.38)	28.2 (1.11)	38 (1.50)	1FK2102, 1FK2.03-..G 1FT2102, 1FT2.03-..G	**6FX8002-8QN04-1■■■**
		M17	0.75	10.5 (0.41)	30.6 (1.20)	38 (1.50)	1FK2103-..H, 1FK2203-..K, 1FK2.04, 1FK2.05 1FT2103-..H, 1FT2203-..K, 1FT2.04, 1FT2.05 1FS2104, 1FS2105	**6FX8002-8QN08-1■■■**
		M23	1.5	12.7 (0.50)	36.9 (1.45)	92.2 (3.63)	1FK2.06, 1FK2208, 1FK2210 1FT2.06, 1FT2208, 1FT2210 1FS2106, 1FS2208	**6FX8002-8QN11-1■■■**
		M23	2.5 [1]	13.7 (0.54)	39.9 (1.57)	99.7 (3.93)	1FK2.06, 1FK2208, 1FK2210 1FT2.06, 1FT2208, 1FT2210	**6FX8002-8QN21-1■■■**
	Pre-assembled OCC motor connection cable MOTION-CONNECT 400 *) for fixed routing with SPEED-CONNECT connector on the motor side and Siemens IX pre-assembled signal connector for the converter side (shield clamp included in the scope of delivery)	M17	0.75	10.1 (0.40)	97 (3.82)	–	1FS2104, 1FS2105	**6FX4002-8QN08-1■■■**
		M23	1.5	11.8 (0.46)	114 (4.49)	–	1FS2106, 1FS2208	**6FX4002-8QN11-1■■■**

*) Available soon.

[1] For increased requirement regarding routing type and ambient temperature.
See tables on page 4/4.

© Siemens 2022

Selection and ordering data

Version	Description	Connector size	Cross-section mm²	D_{max} mm (in)	r_{static} mm (in)	$r_{dynamic}$ mm (in)	For motor (Possible for 1FS2 with Q1x)	Article No. (Length code see table)
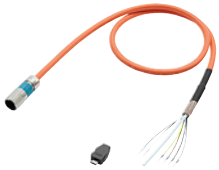	**Partially assembled OCC motor connection cable MOTION-CONNECT 500 for predominantly fixed routing** With SPEED-CONNECT connector on the motor side and Siemens IX signal connector for the converter side enclosed separately (shield clamp included in the scope of delivery)	M12	0.38	9.7 (0.38)	23.5 (0.93)	195 (7.68)	1FK2102, 1FK2.03-..G 1FT2102, 1FT2.03-..G	**6FX5012-8QN04-1■■■**
		M17	0.75	10.5 (0.41)	25.5 (1.00)	195 (7.68)	1FK2103-..H, 1FK2203-..K, 1FK2.04, 1FK2.05 1FT2103-..H, 1FT2203-..K, 1FT2.04, 1FT2.05 1FS2104, 1FS2105	**6FX5012-8QN08-1■■■**
		M23	1.5	12.7 (0.50)	30.7 (1.21)	195 (7.68)	1FK2.06, 1FK2208, 1FK2210 1FT2.06, 1FT2208, 1FT2210 1FS2106, 1FS2208	**6FX5012-8QN11-1■■■**
		M23	2.5 [1]	13.7 (0.54)	30.7 (1.21)	195 (7.68)	1FK2.06, 1FK2208, 1FK2210 1FT2.06, 1FT2208, 1FT2210	**6FX5012-8QN21-1■■■**
	OCC motor connection cable MOTION-CONNECT 800PLUS for use with cable carriers With SPEED-CONNECT connector on the motor side and Siemens IX signal connector for the converter side enclosed separately (shield clamp included in the scope of delivery)	M12	0.38	9.7 (0.38)	28.2 (1.11)	38 (1.50)	1FK2102, 1FK2.03-..G 1FT2102, 1FT2.03-..G	**6FX8012-8QN04-1■■■**
		M17	0.75	10.5 (0.41)	30.6 (1.20)	38 (1.50)	1FK2103-..H, 1FK2203-..K, 1FK2.04, 1FK2.05 1FT2103-..H, 1FT2203-..K, 1FT2.04, 1FT2.05 1FS2104, 1FS2105	**6FX8012-8QN08-1■■■**
		M23	1.5	12.7 (0.50)	36.9 (1.45)	92.2 (3.63)	1FK2.06, 1FK2208, 1FK2210 1FT2.06, 1FT2208, 1FT2210 1FS2106, 1FS2208	**6FX8012-8QN11-1■■■**
		M23	2.5 [1]	13.7 (0.54)	39.9 (1.57)	99.7 (3.93)	1FK2.06, 1FK2208, 1FK2210 1FT2.06, 1FT2208, 1FT2210	**6FX8012-8QN21-1■■■**
	OCC motor connection cable MOTION-CONNECT 400 *) for fixed routing With SPEED-CONNECT connector on the motor side and Siemens IX signal connector for the converter side enclosed separately (shield clamp included in the scope of delivery)	M17	0.75	10.1 (0.40)	97 (3.82)	–	1FS2104, 1FS2105	**6FX4012-8QN08-1■■■**
		M23	1.5	11.8 (0.46)	114 (4.49)	–	1FS2106, 1FS2208	**6FX4012-8QN11-1■■■**

*) Available soon.

[1] For increased requirement regarding routing type and ambient temperature.
See tables on page 4/4.

© Siemens 2022

Selection and ordering data

Extension cable

Version	Description	Connector size	Cross-section mm²	D_{max} mm (in)	r_{static} mm (in)	$r_{dynamic}$ mm (in)	For motor (Possible for 1FS2 with Q1x)	Article No. (Length code see table)
	Pre-assembled OCC extension cable MOTION-CONNECT 500 for predominantly fixed routing with SPEED-CONNECT connectors	M12	0.38	9.7 (0.38)	23.5 (0.93)	195 (7.68)	1FK2102, 1FK2.03-..G 1FT2102, 1FT2.03-..G	**6FX5002-8QE04-1■■■**
		M17	0.75	10.5 (0.41)	25.5 (1.00)	195 (7.68)	1FK2103-..H, 1FK2203-..K, 1FK2.04, 1FK2.05 1FT2103-..H, 1FT2203-..K, 1FT2.04, 1FT2.05 1FS2104, 1FS2105	**6FX5002-8QE08-1■■■**
		M23	1.5	12.7 (0.50)	30.7 (1.21)	195 (7.68)	1FK2.06, 1FK2208, 1FK2210 1FT2.06, 1FT2208, 1FT2210 1FS2106, 1FS2208	**6FX5002-8QE11-1■■■**
		M23	2.5 [1]	13.7 (0.54)	30.7 (1.21)	195 (7.68)	1FK2.06, 1FK2208, 1FK2210 1FT2.06, 1FT2208, 1FT2210	**6FX5002-8QE21-1■■■**
	Pre-assembled OCC extension cable MOTION-CONNECT 800PLUS for use with cable carriers with SPEED-CONNECT connectors	M12	0.38	9.7 (0.38)	28.2 (1.11)	38 (1.50)	1FK2102, 1FK2.03-..G 1FT2102, 1FT2.03-..G	**6FX8002-8QE04-1■■■**
		M17	0.75	10.5 (0.41)	30.6 (1.20)	38 (1.50)	1FK2103-..H, 1FK2203-..K, 1FK2.04, 1FK2.05 1FT2103-..H, 1FT2203-..K, 1FT2.04, 1FT2.05 1FS2104, 1FS2105	**6FX8002-8QE08-1■■■**
		M23	1.5	12.7 (0.50)	36.9 (1.45)	92.2 (3.63)	1FK2.06, 1FK2208, 1FK2210 1FT2.06, 1FT2208, 1FT2210 1FS2106, 1FS2208	**6FX8002-8QE11-1■■■**
		M23	2.5 [1]	13.7 (0.54)	39.9 (1.57)	99.7 (3.93)	1FK2.06, 1FK2208, 1FK2210 1FT2.06, 1FT2208, 1FT2210	**6FX8002-8QE21-1■■■**
	Partially assembled OCC extension cable MOTION-CONNECT 500 for predominantly fixed routing with SPEED-CONNECT connectors (male contacts inserted on the converter side, insulator and connector housing enclosed separately) [2]	M12	0.38	9.7 (0.38)	23.5 (0.93)	195 (7.68)	1FK2102, 1FK2.03-..G 1FT2102, 1FT2.03-..G	**6FX5012-8QE04-1■■■**
		M17	0.75	10.5 (0.41)	25.5 (1.00)	195 (7.68)	1FK2103-..H, 1FK2203-..K, 1FK2.04, 1FK2.05 1FT2103-..H, 1FT2203-..K, 1FT2.04, 1FT2.05 1FS2104, 1FS2105	**6FX5012-8QE08-1■■■**
		M23	1.5	12.7 (0.50)	30.7 (1.21)	195 (7.68)	1FK2.06, 1FK2208, 1FK2210 1FT2.06, 1FT2208, 1FT2210 1FS2106, 1FS2208	**6FX5012-8QE11-1■■■**
		M23	2.5 [1]	13.7 (0.54)	30.7 (1.21)	195 (7.68)	1FK2.06, 1FK2208, 1FK2210 1FT2.06, 1FT2208, 1FT2210	**6FX5012-8QE21-1■■■**
	Partially assembled OCC extension cable MOTION-CONNECT 800PLUS for use with cable carriers with SPEED-CONNECT connectors (male contacts inserted on the converter side, insulator and connector housing enclosed separately) [2]	M12	0.38	9.7 (0.38)	28.2 (1.11)	38 (1.50)	1FK2102, 1FK2.03-..G 1FT2102, 1FT2.03-..G	**6FX8012-8QE04-1■■■**
		M17	0.75	10.5 (0.41)	30.6 (1.20)	38 (1.50)	1FK2103-..H, 1FK2203-..K, 1FK2.04, 1FK2.05 1FT2103-..H, 1FT2203-..K, 1FT2.04, 1FT2.05 1FS2104, 1FS2105	**6FX8012-8QE08-1■■■**
		M23	1.5	12.7 (0.50)	36.9 (1.45)	92.2 (3.63)	1FK2.06, 1FK2208, 1FK2210 1FT2.06, 1FT2208, 1FT2210 1FS2106, 1FS2208	**6FX8012-8QE11-1■■■**
		M23	2.5 [1]	13.7 (0.54)	39.9 (1.57)	99.7 (3.93)	1FK2.06, 1FK2208, 1FK2210 1FT2.06, 1FT2208, 1FT2210	**6FX8012-8QE21-1■■■**

[1] For increased requirement regarding routing type and ambient temperature. See tables on page 4/4.

[2] For the extension cable, special tools for assembling are required. For more information, refer to the installation instructions.

© Siemens 2022

Selection and ordering data

Accessories

OCC components for customer assembly

Version	Description	Cross-section mm^2	For motor (Possible for 1FS2 with Q1x)	Article No. (Length code see table)
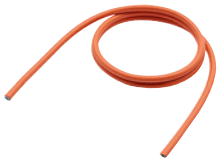	**Sold by the meter, OCC cable MOTION-CONNECT 500** For the self assembly of motor connection or extension cables MOTION-CONNECT 500 for predominantly fixed routing (see table for length codes)	0.38	1FK2102, 1FK2.03-..G 1FT2102, 1FT2.03-..G	**6FX5008-1BE04-■■A0**
		0.75	1FK2103-..H, 1FK2203-..K, 1FK2.04, 1FK2.05 1FT2103-..H, 1FT2203-..K, 1FT2.04, 1FT2.05 1FS2104, 1FS2105	**6FX5008-1BE08-■■A0**
		1.5	1FK2.06, 1FK2208, 1FK2210 1FT2.06, 1FT2208, 1FT2210 1FS2106, 1FS2208	**6FX5008-1BE11-■■A0**
		2.5 [1]	1FK2.06, 1FK2208, 1FK2210 1FT2.06, 1FT2208, 1FT2210	**6FX5008-1BE21-■■A0**
	Sold by the meter, OCC cable MOTION-CONNECT 800PLUS For the self assembly of motor connection or extension cables MOTION-CONNECT 800PLUS for use with cable carriers (see table for length codes)	0.38	1FK2102, 1FK2.03-..G 1FT2102, 1FT2.03-..G	**6FX8008-1BE04-■■A0**
		0.75	1FK2103-..H, 1FK2203-..K, 1FK2.04, 1FK2.05 1FT2103-..H, 1FT2203-..K, 1FT2.04, 1FT2.05 1FS2104, 1FS2105	**6FX8008-1BE08-■■A0**
		1.5	1FK2.06, 1FK2208, 1FK2210 1FT2.06, 1FT2208, 1FT2210 1FS2106, 1FS2208	**6FX8008-1BE11-■■A0**
		2.5 [1]	1FK2.06, 1FK2208, 1FK2210 1FT2.06, 1FT2208, 1FT2210	**6FX8008-1BE21-■■A0**
	Sold by the meter, OCC cable MOTION-CONNECT 400 *) For the self assembly of motor connection or extension cables MOTION-CONNECT 400 for fixed routing (see table for length codes)	0.75	1FS2104, 1FS2105	**6FX4008-1BE08-■■A0**
		1.5	1FS2106, 1FS2208	**6FX4008-1BE11-■■A0**
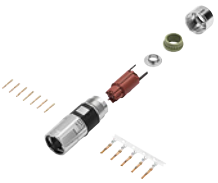	**Motor-side M12 SPEED-CONNECT connector** 10-pole, including all socket contacts	0.38	1FK2102, 1FK2.03-..G 1FT2102, 1FT2.03-..G	**6FX2003-0LU64**
	Motor-side M17 SPEED-CONNECT connector 10-pole, including all socket contacts	0.75	1FK2103-..H, 1FK2203-..K, 1FK2.04, 1FK2.05 1FT2103-..H, 1FT2203-..K, 1FT2.04, 1FT2.05 1FS2104, 1FS2105	**6FX2003-0LU54**
	Motor-side M23 SPEED-CONNECT connector 10-pole, including all socket contacts	1.5 and 2.5	1FK2.06, 1FK2208, 1FK2210 1FT2.06, 1FT2208, 1FT2210 1FS2106, 1FS2208	**6FX2003-0LU34**
	M12 SPEED-CONNECT connector with male thread for extension cable 10-pole, including all pin contacts	0.38	1FK2102, 1FK2.03-..G 1FT2102, 1FT2.03-..G	**6FX2003-0LA64**

*) Available soon.

[1] For increased requirement regarding routing type and ambient temperature.
See tables on page 4/4.

© Siemens 2022

One Cable Connection (OCC) technology for SINAMICS S210

Selection and ordering data

Version	Description	Cross-section mm²	For motor (Possible for 1FS2 with Q1x)	Article No. (Length code see table)
	M17 SPEED-CONNECT connector with male thread for extension cable 10-pole, including all pin contacts	0.75	1FK2103-..H, 1FK2203-..K, 1FK2.04, 1FK2.05 1FT2103-..H, 1FT2203-..K, 1FT2.04, 1FT2.05 1FS2104, 1FS2105	**6FX2003-0LA54**
	M23 SPEED-CONNECT connector with male thread for extension cable 10-pole, including all pin contacts	1.5 and 2.5	1FK2.06, 1FK2208, 1FK2210 1FT2.06, 1FT2208, 1FT2210 1FS2106, 1FS2208	**6FX2003-0LA34**
	Siemens IX signal connector on the converter side Device version in insulation displacement method for field assembly		–	**6FX2003-0DE01**
	Shield clamp For attaching the connection cables to the shield plate of the converter (packing unit 10 items)			
	• For pre-assembled cables with M12 and M17 plugs		–	**6FX2003-7EX10**
	• For pre-assembled cables with M23 plugs		–	**6FX2003-7EX11**

Control cabinet bushing

Version	Description	Article No.
	Mounting flange For cabinet bushing	
	• For connector size M12	**6FX2003-7JX00**
	• For connector size M17	**6FX2003-7HX00**
	• For connector size M23	**6FX2003-7BX00**

4

Length codes for pre-assembled cables (max. 50 m (164 ft))

Description	Article No. supplement		
MOTION-CONNECT cable	**6FX . 0 . 2-8Q . 0 . -1 ■ ■ ■**		
0 m (0 ft)	**A**		
10 m (32.8 ft)	**B**		
20 m (65.6 ft)	**C**		
30 m (98.4 ft)	**D**		
40 m (131 ft)	**E**		
50 m (164 ft)	**F**		
0 m (0 ft)		**A**	
1 m (3.28 ft)		**B**	
2 m (6.56 ft)		**C**	
3 m (9.84 ft)		**D**	
4 m (13.1 ft)		**E**	
5 m (16.4 ft)		**F**	
6 m (19.7 ft)		**G**	
7 m (23.0 ft)		**H**	
8 m (26.2 ft)		**J**	
9 m (29.5 ft)		**K**	
0 m (0 ft)			**0**
0.1 m (0.33 ft)			**1**
0.2 m (0.66 ft)			**2**
0.3 m (0.98 ft)			**3**
0.4 m (1.31 ft)			**4**
0.5 m (1.64 ft)			**5**
0.6 m (1.97 ft)			**6**
0.7 m (2.30 ft)			**7**
0.8 m (2.62 ft)			**8**

Length code for cables sold by the meter

Description	Article No. supplement		
MOTION-CONNECT cable	**6FX . 008-1BE . . -■ ■ A0**		
50 m (164 ft)	**1**	**F**	
100 m (328 ft)	**2**	**A**	
200 m (656 ft)	**3**	**A**	
500 m (1640 ft)	**6**	**A**	

The maximum permissible cable length must be observed.

More information

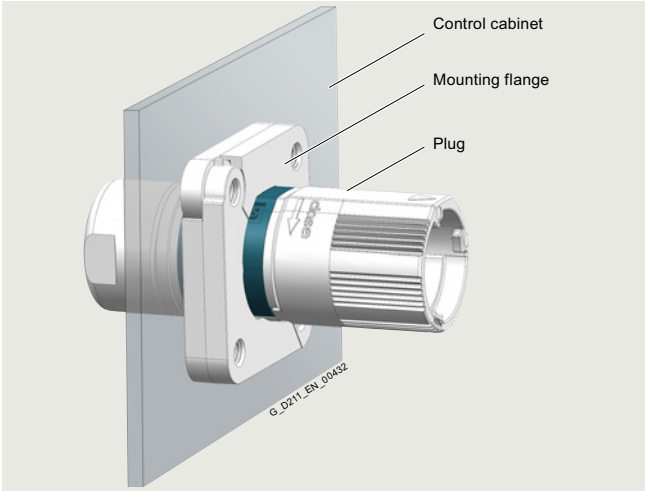

Arrangement of mounting flange and plug in a control cabinet panel

More information, particularly on grounding, is available in the technical documentation on the internet at:
www.siemens.com/sinamics-s210/documentation

© Siemens 2022

SINAMICS SELECTOR App
Mobile selection guide for frequency converters

Siemens has developed the SINAMICS SELECTOR app as a practical tool for finding article numbers for your SINAMICS converter in the power range from 0.1 kW to 630 kW quickly and easily. Whether for SINAMICS V20, SINAMICS G120C, SINAMICS G120P, SINAMICS G120X, SINAMICS G120 or SINAMICS S210: The app will provide you with the correct article numbers conveniently.
How does it work? Simply select your application, the frequency converter you require, the rated power and device options as well as the necessary accessories. Then you can save your selection and send it by email. The preselection serves as the basis for an order specification with the dealer/Siemens.
You will find free downloads for Android and iOS here:
www.siemens.com/sinamics-selector

5/2	**Drive Technology Configurator**
5/3	**TIA Selection Tool**
5/4	**SINAMICS web server for SINAMICS S210**
5/5	**SINAMICS Startdrive commissioning tool**

Security information
Siemens provides products and solutions with industrial security functions that support the secure operation of plants, systems, machines and networks.
In order to protect plants, systems, machines and networks against cyber threats, it is necessary to implement – and continuously maintain – a holistic, state-of-the-art industrial security concept. Siemens' products and solutions constitute one element of such a concept.
Customers are responsible for preventing unauthorized access to their plants, systems, machines and networks. Such systems, machines and components should only be connected to an enterprise network or the internet if and to the extent such a connection is necessary and only when appropriate security measures (e.g. firewalls and/or network segmentation) are in place.
For additional information on industrial security measures that may be implemented, please visit
https://www.siemens.com/industrialsecurity

Siemens' products and solutions undergo continuous development to make them more secure. Siemens strongly recommends that product updates are applied as soon as they are available and that the latest product versions are used. Use of product versions that are no longer supported, and failure to apply the latest updates may increase customer's exposure to cyber threats.
To stay informed about product updates, subscribe to the Siemens Industrial Security RSS Feed under
https://www.siemens.com/cert

© Siemens 2022

Drive Technology Configurator

Overview

The Drive Technology Configurator (DT Configurator) helps you to configure the optimum drive technology products for your application – starting with gearboxes, motors, converters as well as the associated options and components and ending with controllers, software licenses and connection systems. Whether with little or detailed knowledge of products: preselected product groups, deliberate navigation through selection menus and direct product selection through entry of the article number support quick, efficient and convenient configuration.

In addition, comprehensive documentation comprising technical data sheets, 2D dimensional drawings/3D CAD models, operating instructions, certificates, etc. can be selected in the DT Configurator. Immediate ordering is possible by simply transferring a parts list to the shopping cart of the Industry Mall.

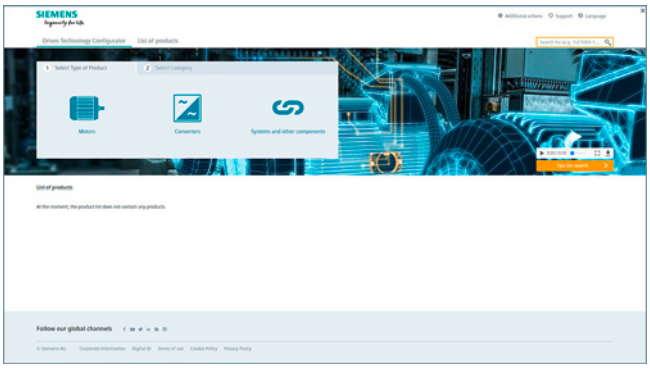

Drive Technology Configurator for efficient drive configuration with the following functions

- Quick and easy configuration of drive products and associated components – gearboxes, motors, converters, controllers, connection systems
- Configuration of drive systems for pump, fan and compressor applications from 1 kW to 2.6 MW
- Retrievable documentation for configured products and components, such as
  - Data sheets in up to 9 languages in PDF or RTF format
  - 2D dimensional drawings/3D CAD models in various formats
  - Terminal box drawing and terminal connection diagram
  - Operating instructions
  - Certificates
  - Start-up calculation for SIMOTICS motors
  - EPLAN macros
- Support with retrofitting in conjunction with Spares On Web www.siemens.com/sow
- Ability to order products directly through the Siemens Industry Mall

Access to the Drive Technology Configurator

The Drive Technology Configurator can be called up without registration and without a login:
www.siemens.com/dt-configurator

© Siemens 2022

Overview

Selection guide and configurator for automation technology

Error-free configuration without expert knowledge through intelligent configurators and selection wizards. Desktop and cloud versions enable cross-team collaboration with maximum flexibility.

There are two versions of the TIA Selection Tool:

- One for downloading and execution on Windows PCs (from Microsoft Windows 10)
- One for running from the cloud, which is launched from mobile devices directly in the browser (we recommend Safari, Chrome and Firefox)

Projects stored in the cloud can be edited with both tools. This makes it possible to work on-the-go using a tablet, at home on a PC – and vice versa, or together with colleagues and customers.

In order to use the full functionality, we recommended setting up a Siemens Industry Mall account for both cases. This gives you access to prices and enables you to save your projects to our cloud.

You can find additional information about the TIA Selection Tool at:
www.siemens.com/tia-selection-tool

Drive dimensioning in the TIA Selection Tool

Application-specific requirements can be determined using drive technology dimensioning in the TIA Selection Tool. This can include motors, gearboxes and converters. The tool supports the configuration and dimensioning of control functions with an open and closed control loop. The technical documentation with features of the technical drive system, as well as a product list for ordering via the Industry Mall can also be compiled.

You can find more information on the SIZER for Siemens Drives engineering tool at
https://support.industry.siemens.com/cs/ww/en/ps/13434/dl

© Siemens 2022

SINAMICS web server for SINAMICS S210

Overview

Web server for efficient commissioning, diagnostics and maintenance – available anywhere, anytime

Thanks to the web server, the SINAMICS S210 drive system offers efficient commissioning, diagnostics and maintenance options. The web server provides access to a multi-faceted range of new options for parameter assignment, drive diagnostics and remote maintenance for any networked PC with a web browser or for tablets and smartphones (via a separate WLAN access point), including:

- Simple and fast commissioning
- Drive traversing via the control panel
- Downloading/uploading a configuration
- Providing a status overview of the drive
- Evaluating warnings and fault messages
- Monitoring and adapting parameter setting

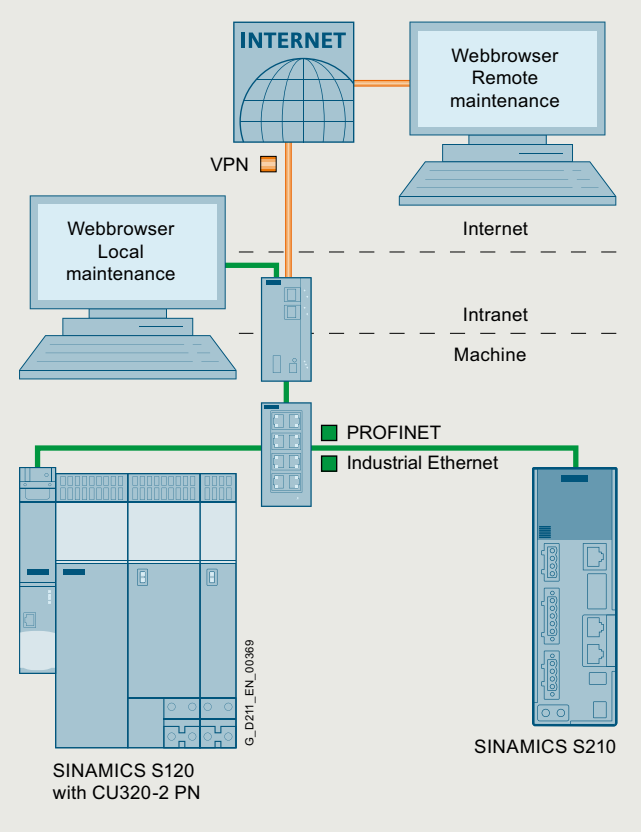

Integration of the SINAMICS web server as shown by the example of SINAMICS S120, SINAMICS S210 and PROFINET communication

The SINAMICS web server is available as of SINAMICS S210 firmware V5.1.

Benefits

Simple and fast commissioning

- No installation of additional commissioning software
- Simple controller optimization with One Button Tuning
- Easy parameterization of Safety Integrated Functions
- Standard pages for limit values and settings
- Comprehensive fault diagnosis
- Firmware update

Shorter machine downtimes

- Efficient diagnostics and maintenance

Direct language selection

- English, French, German, Italian, Spanish, Chinese Simplified

Accessibility

- Via all LAN or PROFINET interfaces
- Tablet and smartphone access via WLAN with separate access point

Two users with different rights profiles

- e.g. for operators and service personnel

Diagnostic functions

- Quick overview of the current configuration and the state of the drive
- Understandable diagnostic information and messages, including the causes of issues and possible remedies, are displayed in plain text in multiple languages

Freely configurable parameter lists

- Monitoring parameters for diagnostic purposes, for example for operating personnel
- Adjustment of the parameter lists using filters, parameter groups and the configuration of personal lists

Access security

- Protection against unauthorized access to the drive information

Application

The web server is ideal for applications in which special commissioning software or version dependencies are not desired. Easy commissioning, diagnostics and maintenance are possible both locally and remotely, provided appropriate security measures are applied.

© Siemens 2022

Overview

SINAMICS Startdrive is integrated in the TIA Portal and is a tool for the configuration, commissioning and diagnostics of the SINAMICS family of converters.

The SINAMICS Startdrive commissioning tool has been optimized with regard to user friendliness and consistent use of the TIA Portal benefits of a common working environment for PLC, HMI and drives. Time-saving and guided step-by-step commissioning with maximum flexibility is complemented by user-friendly graphic function views for all drive functions, including functional safety (Safety Integrated) and drive-based technology functions (e.g. EPos). The automatic message display, the powerful real-time trace and the context-sensitive online help make converter diagnostics very easy.

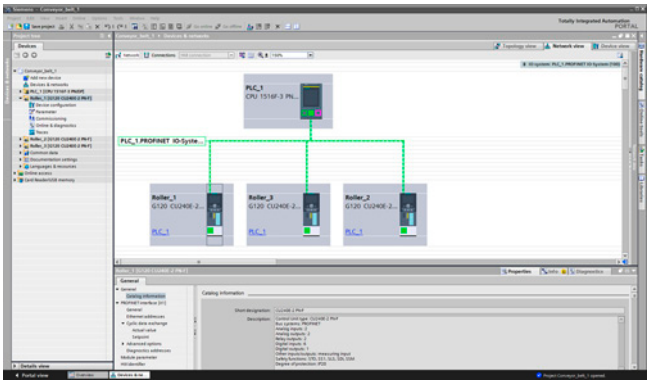

The software packages based on the TIA Portal are harmonized with each other and offer important benefits, the main advantage being a shared project storage. The TIA Portal enables simple integration of SINAMICS converters in your automation solution. Thanks to the standardization of operator actions and the integration in general TIA Portal operating concepts (e.g. UMAC, Openness) as well as standard TIA Portal functions (e.g. Undo/Redo), familiarization is easy both for drive experts as well as SIMATIC users. Special focus is placed on the interaction between SIMATIC and SINAMICS, especially when connecting the SINAMICS drives to SIMATIC technology objects.

Integration

Supported frequency converters

SINAMICS Startdrive Basic enables complete commissioning, diagnostics, parameterization, optimization and connection to the PLC for the following SINAMICS converters integrated in SINAMICS Startdrive:

- SINAMICS G120, G120C, G120D, G120P
- SINAMICS G115D
- SINAMICS G130, G150
- SINAMICS S120, S150
- SINAMICS S210
- SINAMICS MV

SINAMICS Startdrive Advanced

With SINAMICS Startdrive Advanced (available as of V15) you benefit from powerful engineering functions that save you considerable time and ultimately costs.

- Advanced functions for SINAMICS Startdrive: Safety acceptance test for SINAMICS G120, SINAMICS S120 and SINAMICS S210
  - Safety Activation Test
  - Improved optimization options in the drive for CU320-2 PN/DP and CU310-2 PN-based drive units: Extended measuring functions (available as of V5.2 SP3)
  - Prompted acceptance test wizard for all drive-based Safety Integrated functions (Basic and Extended Safety)
  - Automatic and safety function-specific generation of traces to analyze the machine behavior
  - Generation of an acceptance report as Excel file (xlsx format, can also be used with OpenOffice)
  - Available for SINAMICS G120, G120C, G115D, G120D, G120P, S120 and S210
- Also contains all Startdrive Basic functions
- License key only required, no additional installation

New in V17

Startdrive Basic V17

- Extension for UMAC: Additional function right for drive parameter changes including DCC
- Extension of the SINAMICS S210 family: Support of the SINAMICS firmware V5.2 SP3
- Extension of the SINAMICS S120 family: Support of CU320-2 DP (in V4.8 or higher) for SINAMICS S120 Booksize and Chassis
- Extension of the SINAMICS MV family: Support of the SINAMICS firmware V5.2 SP2
- Extensions for CU320-2 PN/DP and CU310-2 PN-based drive units
  - Support of the SINAMICS firmware V5.2 SP3
  - User-defined parameter list
  - Data set switchover (drive, motor, encoder and command data sets)
  - Improved optimization option in the drive (Bode diagram)
  - Extensions for CU320-2 Integrated in SIMATIC Drive Controller
  - EPOS (basic positioner)
  - DCC (Drive Control Chart)
  - Improved interaction between drives and SIMATIC technology objects
  - Transfer of optimization parameters from One Button Tuning (OBT) of the drive to the technology object
  - Display of drive configuration status in the technology object
  - Support of new SINAMICS Technology Extensions (TEC) function, see https://support.industry.siemens.com/cs/ww/en/view/109771648
- Extension of the SINAMICS G120 family:
  - Support of the SINAMICS G115D distributed drive
  - Improved AS-i connection for SINAMICS G115D AS-i (in combination with SIMATIC ET200SP AS-i Master)
- Extension of technology object "BasicPosControl"
  - Physical units
  - Entry of mechanical data
- Extension of Openness for drive units
  - Support of the SINAMICS G115D distributed drive
  - More information on Startdrive Openness can be found at https://support.industry.siemens.com/cs/ww/en/view/109763491

© Siemens 2022

Integration

Startdrive Advanced V17

- Extension of safety acceptance test
  - Safety Activation Test
  - Support of the SINAMICS G115D distributed drive
- Extension for CU320-2 PN/DP and CU310-2 PN-based drive units: Improved optimization options in the drive: Extended measuring functions (available as of V5.2 SP3)

Installation versions

SINAMICS Startdrive can be installed as an optional package to SIMATIC STEP 7 or as a stand-alone application (without SIMATIC STEP 7).

System requirements

The following table shows the recommended hardware and system equipment for the operation of SINAMICS Startdrive.

Hardware	Recommendation
Computer	As of SIMATIC FIELD PG M5 Advanced (or comparable PC)
Processor	Intel Core i5-8400H (2.5 ... 4.2 GHz; 4 cores + hyper-threading; 8 MB Smart Cache)
RAM	16 GB or more (32 GB for large projects)
Hard disk	SSD with at least 50 GB available memory
Screen resolution	15.6"' Full HD display (1920 × 1080 or larger)
Operating systems	• **Windows 10 (64 bit)** - Windows 10 Professional Version 1909, 2004, 2009/20H2 - Windows 10 Enterprise 1909, 2004, 2009/20H2 - Windows 10 IoT Enterprise 2016 LTSB - Windows 10 IoT Enterprise 2019 LTSC • **Windows Server (64 bit)** - Windows 10 Professional Version 1909, 2004, 2009/20H2 - Windows 10 Enterprise 1909, 2004, 2009/20H2 - Windows 10 IoT Enterprise 2016 LTSB - Windows 10 IoT Enterprise 2019 LTSC

Compatibility with other products

- SINAMICS Startdrive V17 operates with STEP 7, WinCC and Scout TIA V17 in one framework
- SINAMICS Startdrive V17 can be installed on the same computer as other versions of SINAMICS Startdrive V12 to V16
- SINAMICS Startdrive can be installed on the same computer as SINAMICS MICROMASTER STARTER

Supported virtualization platforms

SINAMICS Startdrive can be installed in a virtual machine. For this purpose, one of the following virtualization platforms in the specified version or a newer version can be used:

- Windows 10 Professional Version 1909, 2004, 2009/20H2
- Windows 10 Enterprise 1909, 2004, 2009/20H2
- Windows 10 IoT Enterprise 2016 LTSB
- Windows 10 IoT Enterprise 2019 LTSC

Supported security programs

The following security programs have been tested with SINAMICS Startdrive V17:

- Virus scanners:
  - Symantec Endpoint Protection 14.2
  - Trend Micro OfficeScan 12.0
  - McAfee Endpoint Security (ENS) 10.6
  - Kaspersky Endpoint Security 11.3
  - Windows Defender
  - Qihoo 360 "Safe Guard 12.1" + "Virus Scanner"
- Encryption software:
  - Microsoft Bitlocker
- Host-based Intrusion Detection System
  - McAfee Application Control 8.2

Selection and ordering data

Description	Article No.
SINAMICS Startdrive Basic V17 commissioning tool Single license and certificate of license English, French, German, Italian, Spanish, Chinese Simplified	
• On DVD-ROM	**6SL3072-4HA02-0XA0**
• Software download (email address required for delivery)	**6SL3072-4HA02-0XG0**
SINAMICS Startdrive Advanced V17 commissioning tool License key (floating license) English, French, German, Italian, Spanish, Chinese Simplified	
• On DVD-ROM with license key on USB flash drive	**6SL3072-4HA02-0XA5**
• Software download incl. license key (email address required for delivery)	**6SL3072-4HA02-0XG5**
Upgrade SINAMICS Startdrive Advanced V15 ... V16 to V17	
• On DVD-ROM with license key on USB flash drive	**6SL3072-4HA02-0XE5**
• Software download incl. license key (email address required for delivery)	**6SL3072-4HA02-0XK5**
Software Update Service with SINAMICS Startdrive Advanced in the TIA Portal Delivery is performed according to the number of ordered SUS products (e.g. 10 upgrade license keys (floating license) with 10 DVD-ROMs, 10 USB flash drives, etc.)	
• On DVD-ROM with upgrade license key on USB flash drive	**6SL3072-4AA02-0XL8**
• Software download incl. license key (email address required for delivery)	**6SL3072-4AA02-0XY8**

More information

The SINAMICS Startdrive Basic commissioning tool is available free on the internet at
www.siemens.com/startdrive

© Siemens 2022

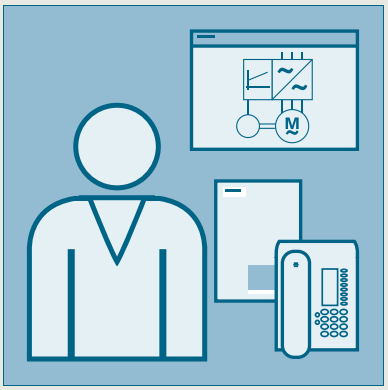

6/2	**Partner**
6/3	**Industry Services**
6/4	Industry Services – Portfolio overview
6/5	Online Support
6/6	**Training**
6/6	SITRAIN – Digital Industry Academy
6/7	SINAMICS S210 training case
6/8	**Applications**
6/9	**Drives Options Partner**
6/10	**mySupport documentation**
6/11	**Documentation**
6/12	General documentation
6/12	SINAMICS S210 documentation

© Siemens 2022

Partner at Siemens

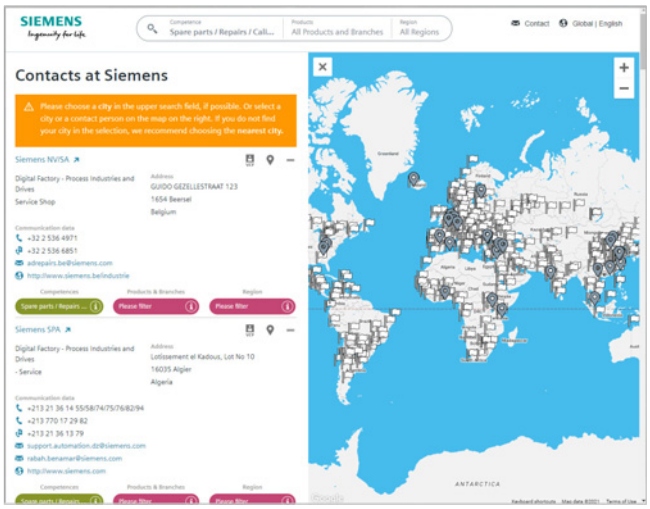

At your service locally, around the globe for consulting, sales, training, service, support, spare parts on the entire portfolio of Siemens.

Your partner can be found in our Personal Contacts Database at:
www.siemens.com/automation-contact

You start by selecting

- the required competence,
- products and branches,
- a country and a city

or by a

- location search or free text search.

© Siemens 2022

Overview

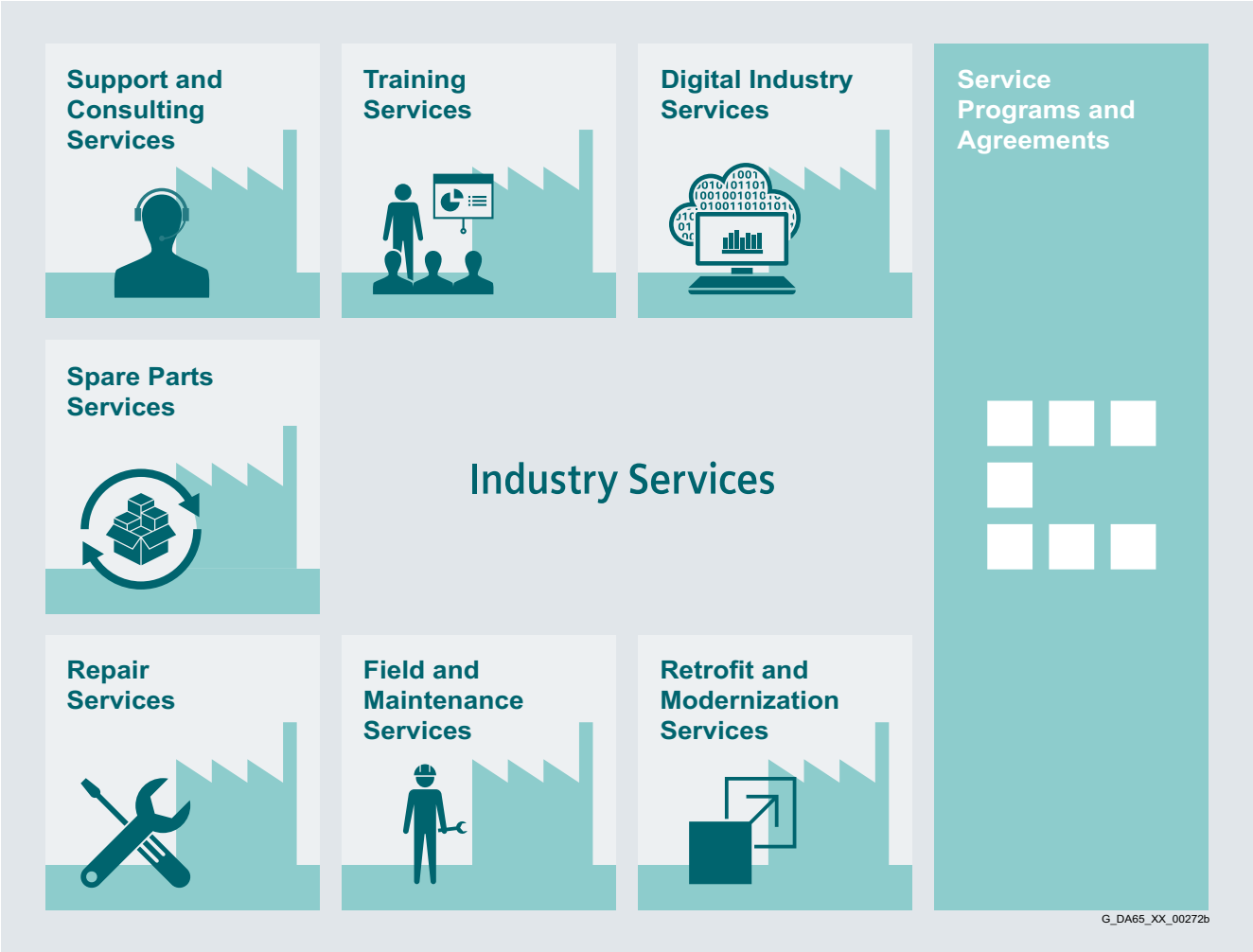

Keep your business running and shaping your digital future – with Industry Services

Optimizing the productivity of your equipment and operations can be a challenge, especially with constantly changing market conditions. Working with our service experts makes it easier. We understand your industry's unique processes and provide the services needed so that you can better achieve your business goals.

You can count on us to maximize your uptime and minimize your downtime, increasing your operations' productivity and reliability. When your operations have to be changed quickly to meet a new demand or business opportunity, our services give you the flexibility to adapt. Of course, we take care that your production is protected against cyber threats. We assist in keeping your operations as energy and resource efficient as possible and reducing your total cost of ownership. As a trendsetter, we ensure that you can capitalize on the opportunities of digitalization and by applying data analytics to enhance decision making: You can be sure that your plant reaches its full potential and retains this over the longer lifespan.

You can rely on our highly dedicated team of engineers, technicians and specialists to deliver the services you need – safely, professionally and in compliance with all regulations. We are there for you, where you need us, when you need us.

www.siemens.com/industryservices

© Siemens 2022

Industry Services – Portfolio overview

Overview

Digital Industry Services

Digital Industry Services make your industrial processes transparent to gain improvements in productivity, asset availability, and energy efficiency.

Production data is generated, filtered and translated with intelligent analytics to enhance decision-making.

This is done whilst taking data security into consideration and with continuous protection against cyber-attack threats.
www.siemens.com/global/en/products/services/industry/digital-industry-services.html

Training Services

From the basics and advanced to specialist skills, SITRAIN courses provide expertise right from the manufacturer – and encompass the entire spectrum of Siemens products and systems for the industry.

Worldwide, SITRAIN courses are available wherever you need a training course in more than 170 locations in over 60 countries.
https://support.industry.siemens.com/cs/ww/en/sc/2226

Support and Consulting Services

Industry Online Support site for comprehensive information, application examples, FAQs and support requests.

Technical and Engineering Support for advice and answers for all inquiries about functionality, handling, and fault clearance. The Service Card as prepaid support for value added services such as Priority Call Back or Extended Support offers the clear advantage of quick and easy purchasing.

Information & Consulting Services, e.g. SIMATIC System Audit; clarity about the state and service capability of your automation system or Lifecycle Information Services; transparency on the lifecycle of the products in your plants.
https://support.industry.siemens.com/cs/ww/en/sc/2235

Spare Parts

Spare Parts Services are available worldwide for smooth and fast supply of spare parts – and thus optimal plant availability. Genuine spare parts are available for up to ten years. Logistic experts take care of procurement, transport, custom clearance, storage and order management. Reliable logistics processes ensure that components reach their destination as needed.

Since not all spare parts can be kept in stock at all times, Siemens offers a preventive measure for spare parts provisioning on the customer's premises with optimized **Spare Parts Packages** for individual products, custom-assembled drive components and entire integrated drive trains – including risk consulting.

Asset Optimization Services help you design a strategy for parts supply where your investment and carrying costs are reduced and the risk of obsolescence is avoided.
https://support.industry.siemens.com/cs/ww/en/sc/2110

Repair Services

Repair Services are offered on-site and in regional repair centers for fast restoration of faulty devices' functionality.

Also available are extended repair services, which include additional diagnostic and repair measures, as well as emergency services.
https://support.industry.siemens.com/cs/ww/en/sc/2154

Field and Maintenance Services

Siemens specialists are available globally to provide expert field and maintenance services, including commissioning, functional testing, preventive maintenance and fault clearance.

All services can be included in customized service agreements with defined reaction times or fixed maintenance intervals.
https://support.industry.siemens.com/cs/ww/en/sc/2265

Retrofit and Modernization Services

Provide a cost-effective solution for the expansion of entire plants, optimization of systems or upgrading existing products to the latest technology and software, e.g. migration services for automation systems.

Service experts support projects from planning through commissioning and, if desired over the entire extended lifespan, e.g. Retrofit for Integrated Drive Systems for an extended lifetime of your machines and plants.
https://support.industry.siemens.com/cs/ww/en/sc/2286

Service Programs and Agreements

A technical Service Program or Agreement enables you to easily bundle a wide range of services into a single annual or multi-year agreement.

You pick the services you need to match your unique requirements or fill gaps in your organization's maintenance capabilities.

Programs and agreements can be customized as KPI-based and/or performance-based contracts.
https://support.industry.siemens.com/cs/ww/en/sc/2275

© Siemens 2022

Overview

Siemens Industry and Online Support with some 1.7 million visitors per month is one of the most popular web services provided by Siemens. It is the central access point for comprehensive technical know-how about products, systems and services for automation and drives applications as well as for process industries.

In connection with the challenges and opportunities related to digitalization you can look forward to continued support with innovative offerings.

© Siemens 2022

SITRAIN – Digital Industry Academy

Time for learning

Today's demands on our knowledge are every bit as diverse and dynamic as our profession itself. We keep learning more and longer – for our work, for our career and for ourselves. Advancing digitalization entails new topics and is also changing the way we absorb and process knowledge. SITRAIN – Digital Industry Academy offers the right source of knowledge here, which we can use anytime in just the way we need it. The time for learning is now.

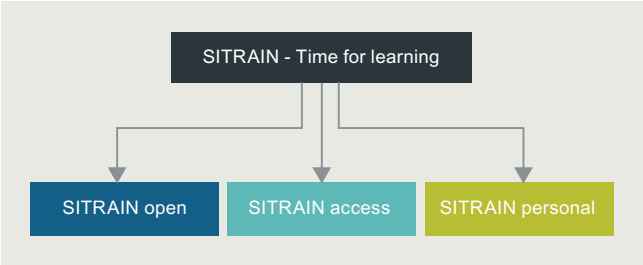

Knowledge for every need

With its three areas – SITRAIN open, SITRAIN access and SITRAIN personal – SITRAIN offers you an all-encompassing range of options for an ongoing expansion of your knowledge and skills, suited for every type of learner. And SITRAIN uses advancing digitalization to continuously expand content and offer new training methods.

Knowledge you can always find

SITRAIN open bundles useful information, worthwhile data and up-to-date expert knowledge about Siemens products for industry. Search it anytime, find anything – and always the right stuff.

Knowledge that gets you ahead

SITRAIN access is learning in the digital age. It offers you individualized ways to build your knowledge and access to exclusive digital training courses. Take advantage of sustainable learning success with a wide range of learning methods. Improve your skills – whether working in groups with others, or by yourself. Whenever, wherever and however you need to.

Knowledge you can experience

We all want to learn from the best. And SITRAIN personal's training courses let you benefit from our well-practiced trainers' expert knowledge, along with direct access to our training equipment. That's the best way to convey knowledge – whether at your company or in our training classrooms.

Find your local offer here

SITRAIN – Digital Industry Academy
Customer Support Germany

Tel.: +49 911 895-7575
Email: sitrain.digital.industry.academy.de@siemens.com

SITRAIN – Digital Industry Academy

www.siemens.com/sitrain

- SITRAIN open: www.siemens.com/sitrain-open
- SITRAIN access: www.siemens.com/sitrain-access
- SITRAIN personal: www.siemens.com/sitrain-personal

© Siemens 2022

Overview

SINAMICS S210 training case

The SINAMICS S210 training case (version with 2 axes and PROFINET) is a convincing demonstration system thanks to its compact design. It is suitable for direct presentations as well as for tests in technical departments. The training case enables the functions of SINAMICS S210 servo drive system to be demonstrated and tested quickly and easily.

It contains the following components:

- 2 × SINAMICS S210 servo converters, 0.1 kW, 230 V 1 AC
- 2 × SIMOTICS S-1FK2 servomotors, High Dynamic (1 × singleturn, 1 × multiturn, without break)
- 2 × One Cable Connection (OCC) motor connection cable
- Rail, prepared for installation of a controller, e.g. SIMATIC S7-1500 (controller not included in scope of delivery)

The SINAMICS S210 training case is supplied as a trolley with a hood.

Technical specifications

SINAMICS S210 training case	6AG1067-1AA33-0AA0
Supply voltage	230 V 1 AC
Dimensions	
• Width	420 mm (16.54 in)
• Height	580 mm (22.83 in)
• Depth	340 mm (13.39 in)
Weight, approx.	21 kg (46.3 lb)

Selection and ordering data

Description	Article No.
SINAMICS S210 training case	**6AG1067-1AA33-0AA0**

© Siemens 2022

Overview

Our understanding of an application is the customer-specific solution of an automation task based on standard hardware and software components. In this respect, industry knowledge and technological expertise are just as important as expert knowledge about how our products and systems work. We are setting ourselves this challenge with more than 280 application engineers in 20 countries.

Application centers

We currently have application centers in:

- Germany:
  Head Office in Erlangen and in other German regions, e.g. in Munich, Nuremberg, Stuttgart, Mannheim, Frankfurt, Chemnitz, Cologne, Bielefeld, Bremen, Hanover, Hamburg
- Belgium: Brussels
- Brazil: Sao Paulo
- China: Beijing and 12 regions
- Denmark: Ballerup
- France: Paris
- Great Britain: Manchester
- India: Mumbai
- Italy: Bologna, Milan
- Japan: Tokyo, Osaka
- The Netherlands: The Hague
- Austria: Vienna
- Poland: Warsaw
- Sweden: Göteborg
- Switzerland: Zurich, Lausanne
- Spain: Madrid
- South Korea: Seoul
- Taiwan: Taipei
- Turkey: Istanbul
- USA: Atlanta

These application centers specialize in the use of SIMATIC/SIMOTION/SINAMICS. You therefore can rely on automation and drive specialists for implementing successful applications. By involving your personnel at an early stage in the process, we can provide a solid basis for rapid knowledge transfer, maintenance and further development of your automation solution.

Advice on applications and implementation

We offer a variety of consultation services to help you find the optimum solution for the SIMATIC/SIMOTION/SINAMICS application you want to implement:

The quotation phase includes

- clarification of technical questions,
- discussion of machine concepts and customer-specific solutions,
- selection of suitable technology and
- suggestions for implementation.

A technical feasibility study is also performed at the outset. In this way, difficult points of the application can be identified and solved early on. We can also configure and implement your application as a complete solution from a single source.

A large number of proven standard applications are available for use during the implementation phase. This saves engineering costs.

The system can be commissioned by experienced, competent personnel, if required. This saves time and trouble.

If servicing is required, we can support you on site or remotely. For further information about servicing, please see the section "Industry Services".

On-site application training

Training for the implemented applications can also be organized and carried out on site. This training for machine manufacturers and their customers does not deal with individual products, but the entire hardware and software system (for example, automation, drives and visualization).

From an initial concept to successful installation and commissioning: We provide complete support for SIMATIC/SIMOTION/SINAMICS! Contact your Siemens representative.

You can find further information at
www.siemens.com/machinebuilding

© Siemens 2022

Overview

Siemens Product Partners for Drives Options

Individual options for our drives

In order to meet as many customer requirements as possible in the field of drive technology, in addition to its own products, Siemens also relies on the individual and complementary services of selected partners.

We are increasingly focusing on the standard drive options, and our Siemens Product Partners for Drives Options supplement our drives with individual drive options.

This gives Siemens a unique flexibility to meet all application requirements. Naturally, we support our Siemens Product Partners for Drives Options in tailoring their options perfectly to our drives.

For you as our customer, there are multiple benefits:

- The Siemens Product Partners for Drives Options meet the same high standards of quality and performance that we place on our own products
- Drive options can be adapted to individual requirements/ designs
- The Siemens Product Partners for Drives Options know our Siemens converter portfolio and can advise you individually and quickly

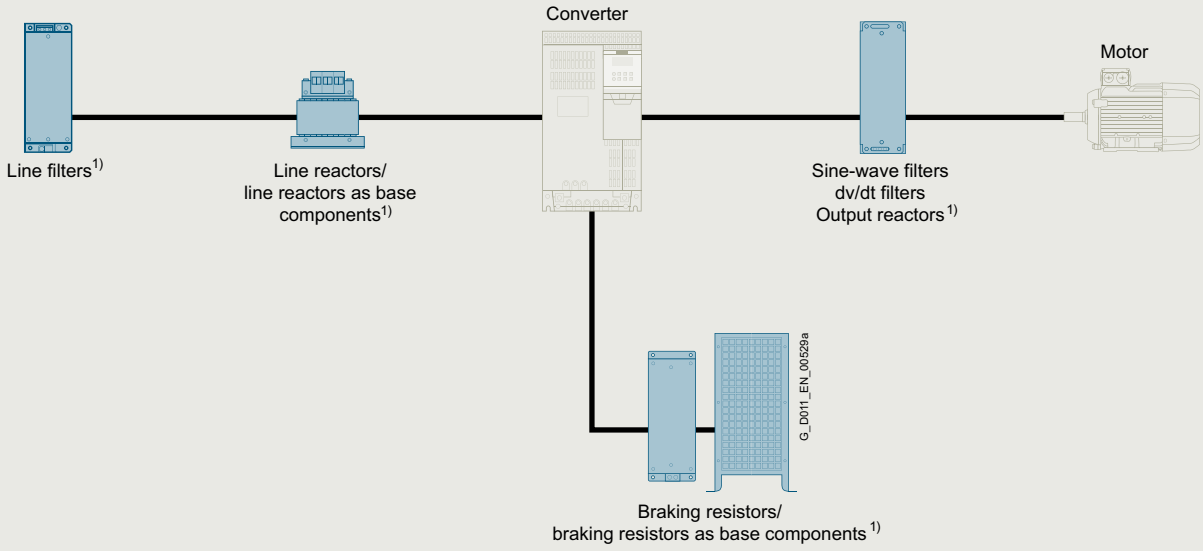

1) Options that can be supplied from Siemens as well as from Product Partners for Drives Options.

Schematic circuit diagram

More information

You can find more information on the internet at
www.siemens.com/drives-options-partner

© Siemens 2022

Overview

mySupport documentation – Compiling personal documents

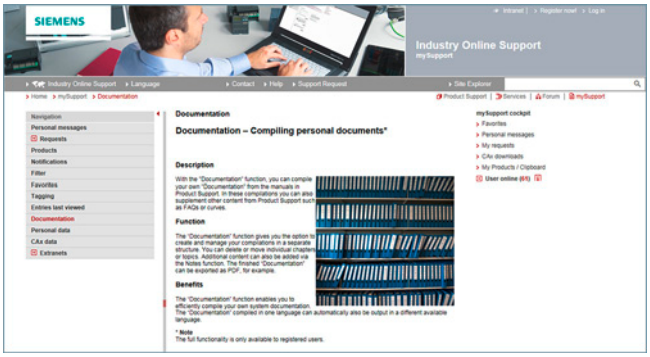

mySupport documentation is a web-based system for generating personalized documentation based on standard documents and is part of the Siemens Industry Online Support portal.

In mySupport, a personal document library can be created in the "Documentation" category. This library can be accessed online in mySupport or also be generated in various formats for offline use.

Previously, this functionality was available in the My Documentation Manager for configurable manuals. Due to the integration in mySupport, all entries of the Industry Online Support can now be imported into the personal document library, including FAQs or product notifications.

If you have already worked with the My Documentation Manager, all of the previously created libraries will continue to be available without restrictions in mySupport.

In addition, the personal library in mySupport can be shared with other mySupport users. In this way, a collection of relevant documents can be created very effectively and used together with other mySupport users all over the world.

You must register/log in for configuring and generating/managing.

Benefits

- Display
  View, print or download standard documents or personalized documents
- Configure
  Transfer standard documents or parts of them to personalized documents
- Generate/Manage
  Generate and manage personalized documents in the formats PDF, RTF or XML in all available languages

Function

Opening mySupport documentation in the Industry Online Support portal

- Via the product support, entry type "Manual":
  https://support.industry.siemens.com/cs/ww/en/ps/man
  By clicking on the required version of the manual and then "Show and configure", the manual opens in a modular view, where you can navigate from topic to topic. Here the direct link to a topic can be used and made available to other users. The selected document can be added to the personal library via "mySupport Cockpit" > "Add to mySupport documentation".
- Via the direct link
  https://support.industry.siemens.com/my/ww/en/documentation/advanced
  After logon/registration, the online help is displayed as the current document.

More information

You can find additional information on the internet at

- https://support.industry.siemens.com/my/ww/en/documentation
- https://support.industry.siemens.com/cs/helpcenter/en/index.htm?#persoenliche_bibliothek_aufbauen.htm

© Siemens 2022

Overview

A high-quality programmable control or drive system can be used to maximum effect only if the user is aware of the performance of the products used as a result of intensive training and good technical documentation.

This is becoming more important due to the shorter innovation cycles of modern automation products and the convergence of electronics and mechanical engineering.

A comprehensive range of documentation is available which includes a Getting Started guide, operating instructions, installation manuals and a list manual.

The documents are available in hardcopy form or as a PDF file for downloading from the internet.

Information and documentation relating to SINUMERIK, SINAMICS, SIMOTION and SIMOTICS are available on the internet at
https://support.industry.siemens.com/cs/document/109476679

Application

Explanations of the manuals:

- **Operating Instructions**
  contain all the information needed to install the device and make electrical connections, information about commissioning and a description of the converter functions.
  Phases of use: Control cabinet construction, commissioning, operation, maintenance and servicing.
- **Hardware Installation Manual**
  contains all relevant information about the intended use of the components of a system (technical specifications, interfaces, dimensional drawings, characteristics, or possible applications), information about installation and electrical connections and information about maintenance and servicing.
  Phases of use: Control cabinet configuration/construction, maintenance and servicing.
- **Operating and Installation Instructions**
  (for converter and accessories)
  contain all relevant information about the intended use of the components, such as technical specifications, interfaces, dimensional drawings, characteristics, or possible applications.
  Phases of use: Control cabinet configuration/construction.
- **Manual/Configuration Manual**
  contains all necessary information about the intended use of the components of a system, e.g. technical specifications, interfaces, dimensional drawings, characteristics, or possible applications.
  Phases of use: Cabinet configuration/setup, circuit diagram configuration/drawing.
- **Commissioning Manual**
  contains all information relevant to commissioning after installation and wiring. It also contains all safety and warning notices relevant to commissioning in addition to overview drawings.
  Phases of use: Commissioning of components that have already been connected, configuration of system functions.
- **List Manual**
  contains all parameters, function diagrams, and faults/alarms for the product/system as well as their meanings and setting options. It contains parameter data and fault/alarm descriptions with functional correlations.
  Phases of use: Commissioning of components that have already been connected, configuration of system functions, fault cause/diagnosis.
- **Getting Started**
  provides information about getting started for the first-time user as well as references to additional information. It contains information about the basic steps to be taken during commissioning. The information in the other documentation should be carefully observed for all of the other work required.
  Phases of use: Commissioning of components that have already been connected.
- **Function Manual Drive Functions**
  contains all the relevant information about individual drive functions: Description, commissioning and integration in the drive system.
  Phases of use: Commissioning of components that have already been connected, configuration of system functions.

© Siemens 2022

General documentation

Overview

Description	Article No.
Decentralization with PROFIBUS DP/DPV1	Via bookstore
• German	**ISBN 978-3-89578-189-6**
• English	**ISBN 978-3-89578-218-3**
Automating with PROFINET: Industrial Communication Based on Industrial Ethernet	Via bookstore
• German	**ISBN 978-3-89578-293-0**
• English	**ISBN 978-3-89578-294-7**

SINAMICS S210 documentation

Overview

A **Quick Installation Guide** is supplied in hard copy form in English with every SINAMICS S210. Further documentation, such as the operating instructions, is available free on the internet at:
www.siemens.com/sinamics-s210/documentation

Detailed information on the SINAMICS S210 drive system, including the latest technical documentation (brochures, tutorials, dimensional drawings, certificates, manuals and operating instructions), is available on the internet at:
www.siemens.com/sinamics-s210

and is also available via the Drive Technology Configurator (DT Configurator) on the internet.
The DT Configurator can be found in the Siemens Industry Mall at the following address:
www.siemens.com/sinamics-s210/configuration

© Siemens 2022

Appendix

7/2	Certificates of suitability (approvals)
7/4	Software licenses
7/6	Conversion tables
7/8	Metal surcharges
7/11	Conditions of sale and delivery

© Siemens 2022

Certificates of suitability (approvals)

Overview

Many of the products in this catalog fulfill requirements, e.g. for UL, CSA or FM and are labeled with the corresponding approval designation.

All of the certificates of suitability, approvals, certificates, declarations of conformity, test certificates, e.g. CE, UL, Safety Integrated etc. have been performed with the associated system components as they are described in the Catalogs and Configuration Manuals.

The certificates are only valid if the products are used with the described system components, are installed according to the Installation Guidelines and used for their intended purpose.

In other cases, the vendor of these products is responsible for arranging for the issue of new certificates.

Test code	Tested by	Device series/ Component	Test standard	Product category/ File-No.
UL: Underwriters Laboratories Independent public testing body in North America				
	UL according to UL standard	SINUMERIK	Standard UL 508, CSA C22.2 No. 142	NRAQ/7.E164110 NRAQ/7.E217227
		SIMOTION	Standard UL 508, CSA C22.2 No. 142	NRAQ/7.E164110
	UL according to CSA standard	SINAMICS	Standard UL 508, 508C, 61800-5-1 CSA C22.2 No. 142, 274	NRAQ/7.E164110, NMMS/2/7/8.E192450, NMMS/2/7/8.E203250, NMMS/7.E214113, NMMS/7.E253831
	UL according to UL and CSA standards			NMMS/2/7/8.E121068 NMMS/7.E355661 NMMS/7.E323473
	UL according to UL standard	SIMODRIVE	Standard UL 508C, CSA C22.2 No. 274	NMMS/2/7/8.E192450 NMMS/7.E214113
	UL according to CSA standard	SIMOTICS	Standard UL 1004-1, 1004-6, 1004-8, CSA C22.2 No. 100	PRGY2/8.E227215 PRHZ2/8.E93429 PRHJ2/8.E342747 PRGY2/8.E253922 PRHZ2/8.E342746
	UL according to UL and CSA standards			
		Line/motor reactors	Standard UL 508, 506, 5085-1, 5085-2, 1561, CSA C22.2 No. 14, 47, 66.1-06, 66.2-06	XQNX2/8.E257859 NMTR2/8.E219022 NMMS2/8.E333628 XPTQ2/8.E257852 XPTQ2/8.E103521 NMMS2/8.E224872 XPTQ2/8.E354316 XPTQ2/8.E198309 XQNX2/8.E475972
		Line filters, dv/dt filters, sine-wave filters	UL 1283, CSA C22.2 No. 8	FOKY2/8.E70122
		Resistors	UL 508, 508C, CSA C22.2 No. 14, 274	NMTR2/8.E224314 NMMS2/8.E192450 NMTR2/8.E221095 NMTR2/8.E226619
TUV: TUV Rheinland of North America Inc. Independent public testing body in North America, Nationally Recognized Testing Laboratory (NRTL) TÜV: TÜV SÜD Product Service Independent public testing body in Germany, Nationally Recognized Testing Laboratory (NRTL) for North America				
	TUV according to UL and CSA standards	SINAMICS	NRTL listing according to standard UL 508C	U7V 12 06 20078 013 U7 11 04 20078 009 U7 11 04 20078 010 U7 11 04 20078 011
		SIMOTION	NRTL listing according to standard UL 508	U7V 13 03 20078 01
		SIMODRIVE	NRTL listing according to standard UL 508C, CSA C22.2. No. 14	CU 72090702
		Motion Control Encoder	NRTL listing according to UL 61010-1 CSA C22.2 No. 61010-1	U8V 10 06 20196 024

© Siemens 2022

Overview

Test code	Tested by	Device series/ Component	Test standard	Product category/ File-No.
CSA: Canadian Standards Association Independent public testing body in Canada				
	CSA according to CSA standard	SINUMERIK	Standard CSA C22.2 No. 142	2252-01 : LR 102527
FMRC: Factory Mutual Research Corporation Independent public testing body in North America				
	FM according to FM standard	SINUMERIK	Standard FMRC 3600, FMRC 3611, FMRC 3810, ANSI/ISA S82.02.1	–
EAC: Ivanovo-Certificate Independent public testing body in the Russian Federation				
	EAC in accordance with the EAC Directive	SINAMICS SINUMERIK SIMOTION	Standard IEC 61800-5-1/-2, IEC 61800-3	–
RCM: Australian Communications and Media Authority Independent public testing body in Australia				
	RCM according to EMC standard	SINAMICS SINUMERIK SIMOTION	Standard IEC AS 61800-3, EN 61800-3	–
KC: National Radio Research Agency Independent public testing body in South Korea				
	KC according to EMC standard	SINAMICS SINUMERIK SIMOTION	Standard KN 11	–
BIA Federal Institute for Occupational Safety				
–	Functional safety	SINAMICS SINUMERIK SIMOTION	Standard EN 61800-5-2	–
TÜV SÜD Rail				
–	Functional safety	SINAMICS SINUMERIK SIMOTION	Standard EN 61800-5-2	–

More information about certificates can be found online at:
https://support.industry.siemens.com/cs/ww/en/ps/cert

© Siemens 2022

Software licenses

Overview

Software types

Software requiring a license is categorized into types.
The following software types have been defined:

- Engineering software
- Runtime software

Engineering software

This includes all software products for creating (engineering) user software, e.g. for configuring, programming, parameterizing, testing, commissioning or servicing.

Data generated with engineering software and executable programs can be duplicated for your own use or for use by third-parties free-of-charge.

Runtime software

This includes all software products required for plant/machine operation, e.g. operating system, basic system, system expansions, drivers, etc.

The duplication of the runtime software and executable programs created with the runtime software for your own use or for use by third-parties is subject to a charge.

You can find information about license fees according to use in the ordering data (e.g. in the catalog). Examples of categories of use include per CPU, per installation, per channel, per instance, per axis, per control loop, per variable, etc.

Information about extended rights of use for parameterization/configuration tools supplied as integral components of the scope of supply can be found in the readme file supplied with the relevant product(s).

License types

Siemens Industry Automation & Drive Technologies offers various types of software license:

- Floating license
- Single license
- Rental license
- Rental floating license
- Trial license
- Demo license
- Demo floating license

Floating license

The software may be installed for internal use on any number of devices by the licensee. Only the concurrent user is licensed. The concurrent user is the person using the program. Use begins when the software is started.
A license is required for each concurrent user.

Single license

Unlike the floating license, a single license permits only one installation of the software per license.

The type of use licensed is specified in the ordering data and in the Certificate of License (CoL). Types of use include for example per instance, per axis, per channel, etc.

One single license is required for each type of use defined.

Rental license

A rental license supports the "sporadic use" of engineering software. Once the license key has been installed, the software can be used for a specific period of time (the operating hours do not have to be consecutive).
One license is required for each installation of the software.

Rental floating license

The rental floating license corresponds to the rental license, except that a license is not required for each installation of the software. Rather, one license is required per object (for example, user or device).

Trial license

A trial license supports "short-term use" of the software in a non-productive context, e.g. for testing and evaluation purposes. It can be transferred to another license.

Demo license

The demo license supports the "sporadic use" of engineering software in a non-productive context, for example, use for testing and evaluation purposes. It can be transferred to another license. After the installation of the license key, the software can be operated for a specific period of time, whereby usage can be interrupted as often as required.

One license is required per installation of the software.

Demo floating license

The demo floating license corresponds to the demo license, except that a license is not required for each installation of the software. Rather, one license is required per object (for example, user or device).

Certificate of License (CoL)

The CoL is the licensee's proof that the use of the software has been licensed by Siemens. A CoL is required for every type of use and must be kept in a safe place.

Downgrading

The licensee is permitted to use the software or an earlier version/release of the software, provided that the licensee owns such a version/release and its use is technically feasible.

Delivery versions

Software is constantly being updated.
The following delivery versions

- PowerPack
- Upgrade

can be used to access updates.

Existing bug fixes are supplied with the ServicePack version.

PowerPack

PowerPacks can be used to upgrade to more powerful software. The licensee receives a new license agreement and CoL (Certificate of License) with the PowerPack. This CoL, together with the CoL for the original product, proves that the new software is licensed.
A separate PowerPack must be purchased for each original license of the software to be replaced.

Upgrade

An upgrade permits the use of a new version of the software on the condition that a license for a previous version of the product is already held.
The licensee receives a new license agreement and CoL with the upgrade. This CoL, together with the CoL for the previous product, proves that the new version is licensed.
A separate upgrade must be purchased for each original license of the software to be upgraded.

© Siemens 2022

Overview

ServicePack

ServicePacks are used to debug existing products. ServicePacks may be duplicated for use as prescribed according to the number of existing original licenses.

License key

Siemens Industry Automation & Drive Technologies supplies software products with and without license keys.

The license key serves as an electronic license stamp and is also the "switch" for activating the software (floating license, rental license, etc.).

The complete installation of software products requiring license keys includes the program to be licensed (the software) and the license key (which represents the license).

Software Update Service (SUS)

As part of the SUS contract, all software updates for the respective product are made available to you free of charge for a period of one year from the invoice date. The contract will automatically be extended for one year if it is not canceled three months before it expires.

The possession of the current version of the respective software is a basic condition for entering into an SUS contract.

You can download explanations concerning license conditions from https://mall.industry.siemens.com/legal/ww/en/terms_of_trade_en.pdf

© Siemens 2022

Appendix

Conversion tables

Rotary inertia (to convert from A to B, multiply by entry in table)

A \ B	lb-in^2	lb-ft^2	lb-in-s^2	lb-ft-s^2 slug-ft^2	kg-cm^2	kg-cm-s^2	gm-cm^2	gm-cm-s^2	oz-in^2	oz-in-s^2
lb-in^2	1	6.94×10^{-3}	2.59×10^{-3}	2.15×10^{-4}	2.926	2.98×10^{-3}	2.92×10^{3}	2.984	16	4.14×10^{-2}
lb-ft^2	144	1	0.3729	3.10×10^{-2}	421.40	0.4297	4.21×10^{5}	429.71	2304	5.967
lb-in-s^2	386.08	2.681	1	8.33×10^{-2}	1.129×10^{3}	1.152	1.129×10^{6}	1.152×10^{3}	6.177×10^{3}	16
lb-ft-s^2 slug-ft^2	4.63×10^{3}	32.17	12	1	1.35×10^{4}	13.825	1.355×10^{7}	1.38×10^{4}	7.41×10^{4}	192
kg-cm^2	0.3417	2.37×10^{-3}	8.85×10^{-4}	7.37×10^{-5}	1	1.019×10^{-3}	1000	1.019	5.46	1.41×10^{-2}
kg-cm-s^2	335.1	2.327	0.8679	7.23×10^{-2}	980.66	1	9.8×10^{5}	1000	5.36×10^{3}	13.887
gm-cm^2	3.417×10^{-4}	2.37×10^{-6}	8.85×10^{-7}	7.37×10^{-8}	1×10^{-3}	1.01×10^{-6}	1	1.01×10^{-3}	5.46×10^{-3}	1.41×10^{-5}
gm-cm-s^2	0.335	2.32×10^{-3}	8.67×10^{-4}	7.23×10^{-5}	0.9806	1×10^{-3}	980.6	1	5.36	1.38×10^{-2}
oz-in^2	0.0625	4.34×10^{-4}	1.61×10^{-4}	1.34×10^{-5}	0.182	1.86×10^{-4}	182.9	0.186	1	2.59×10^{-3}
oz-in-s^2	24.13	0.1675	6.25×10^{-2}	5.20×10^{-3}	70.615	7.20×10^{-2}	7.09×10^{4}	72.0	386.08	1

Torque (to convert from A to B, multiply by entry in table)

A \ B	lb-in	lb-ft	oz-in	N-m	kg-cm	kg-m	gm-cm	dyne-cm
lb-in	1	8.333×10^{-2}	16	0.113	1.152	1.152×10^{-2}	1.152×10^{3}	1.129×10^{6}
lb-ft	12	1	192	1.355	13.825	0.138	1.382×10^{4}	1.355×10^{7}
oz-in	6.25×10^{-2}	5.208×10^{-3}	1	7.061×10^{-3}	7.200×10^{-2}	7.200×10^{-4}	72.007	7.061×10^{4}
N-m	8.850	0.737	141.612	1	10.197	0.102	1.019×10^{4}	1×10^{7}
kg-cm	0.8679	7.233×10^{-2}	13.877	9.806×10^{-2}	1	10^{-2}	1000	9.806×10^{5}
kg-m	86.796	7.233	1.388×10^{3}	9.806	100	1	1×10^{5}	9.806×10^{7}
gm-cm	8.679×10^{-4}	7.233×10^{-5}	1.388×10^{-2}	9.806×10^{-5}	1×10^{-3}	1×10^{-5}	1	980.665
dyne-cm	8.850×10^{-7}	7.375×10^{-8}	1.416×10^{-5}	10^{-7}	1.0197×10^{-6}	1.019×10^{-8}	1.019×10^{-3}	1

Length (to convert from A to B, multiply by entry in table)

A \ B	inches	feet	cm	yd	mm	m
inches	1	0.0833	2.54	0.028	25.4	0.0254
feet	12	1	30.48	0.333	304.8	0.3048
cm	0.3937	0.03281	1	1.09×10^{-2}	10	0.01
yd	36	3	91.44	1	914.4	0.914
mm	0.03937	0.00328	0.1	1.09×10^{-3}	1	0.001
m	39.37	3.281	100	1.09	1000	1

Power (to convert from A to B, multiply by entry in table)

A \ B	hp	Watts
hp (English)	1	745.7
(lb-in) (deg./s)	2.645×10^{-6}	1.972×10^{-3}
(lb-in) (rpm)	1.587×10^{-5}	1.183×10^{-2}
(lb-ft) (deg./s)	3.173×10^{-5}	2.366×10^{-2}
(lb-ft) (rpm)	1.904×10^{-4}	0.1420
Watts	1.341×10^{-3}	1

Force (to convert from A to B, multiply by entry in table)

A \ B	lb	oz	gm	dyne	N
lb	1	16	453.6	4.448×10^{5}	4.4482
oz	0.0625	1	28.35	2.780×10^{4}	0.27801
gm	2.205×10^{-3}	0.03527	1	1.02×10^{-3}	N.A.
dyne	2.248×10^{-6}	3.59×10^{-5}	980.7	1	0.00001
N	0.22481	3.5967	N.A.	100000	1

Mass (to convert from A to B, multiply by entry in table)

A \ B	lb	oz	gm	kg	slug
lb	1	16	453.6	0.4536	0.0311
oz	6.25×10^{-2}	1	28.35	0.02835	1.93×10^{-3}
gm	2.205×10^{-3}	3.527×10^{-2}	1	10^{-3}	6.852×10^{-5}
kg	2.205	35.27	10^{3}	1	6.852×10^{-2}
slug	32.17	514.8	1.459×10^{4}	14.59	1

Rotation (to convert from A to B, multiply by entry in table)

A \ B	rpm	rad/s	degrees/s
rpm	1	0.105	6.0
rad/s	9.55	1	57.30
degrees/s	0.167	1.745×10^{-2}	1

© Siemens 2022

Temperature Conversion

°F	°C	°C	°F
0	–17.8	–10	14
32	0	0	32
50	10	10	50
70	21.1	20	68
90	32.2	30	86
98.4	37	37	98.4
212	100	100	212
subtract 32 and multiply by $^5/_9$		multiply by $^9/_5$ and add 32	

Mechanism Efficiencies

Acme-screw with brass nut	~0.35–0.65
Acme-screw with plastic nut	~0.50–0.85
Ball-screw	~0.85–0.95
Chain and sprocket	~0.95–0.98
Preloaded ball-screw	~0.75–0.85
Spur or bevel-gears	~0.90
Timing belts	~0.96–0.98
Worm gears	~0.45–0.85
Helical gear (1 reduction)	~0.92

Friction Coefficients

Materials	μ
Steel on steel (greased)	~0.15
Plastic on steel	~0.15–0.25
Copper on steel	~0.30
Brass on steel	~0.35
Aluminum on steel	~0.45
Steel on steel	~0.58

Mechanism	μ
Ball bushings	<0.001
Linear bearings	<0.001
Dove-tail slides	~0.2++
Gibb ways	~0.5++

Material Densities

Material	lb-in^3	gm-cm^3
Aluminum	0.096	2.66
Brass	0.299	8.30
Bronze	0.295	8.17
Copper	0.322	8.91
Hard wood	0.029	0.80
Soft wood	0.018	0.48
Plastic	0.040	1.11
Glass	0.079–0.090	2.2–2.5
Titanium	0.163	4.51
Paper	0.025–0.043	0.7–1.2
Polyvinyl chloride	0.047–0.050	1.3–1.4
Rubber	0.033–0.036	0.92–0.99
Silicone rubber, without filler	0.043	1.2
Cast iron, gray	0.274	7.6
Steel	0.280	7.75

Wire Gauges[1)]

Cross-section mm^2	Standard Wire Gauge (SWG)	American Wire Gauge (AWG)
0.2	25	24
0.3	23	22
0.5	21	20
0.75	20	19
1.0	19	18
1.5	17	16
2.5	15	13
4	13	11
6	12	9
10	9	7
16	7	6
25	5	3
35	3	2
50	0	1/0
70	000	2/0
95	00000	3/0
120	0000000	4/0
150	–	6/0
185	–	7/0

1) The table shows approximate SWG/AWG sizes nearest to standard metric sizes; the cross-sections do not match exactly.

© Siemens 2022

Explanation of the raw material/metal surcharges [1)]

Surcharge calculation

To compensate for variations in the price of the raw materials silver, copper, aluminum, lead, gold, dysprosium[2)] and/or neodym[2)], surcharges are calculated on a daily basis using the so-called metal factor for products containing these raw materials. A surcharge for the respective raw material is calculated as a supplement to the price of a product if the basic official price of the raw material in question is exceeded.

The surcharges are calculated in accordance with the following criteria:

- Basic official price of the raw material
  Basic official price from the day prior to receipt of the order or prior to release order (daily price) for[3)]
  - Silver (sales price, processed)
  - Gold (sales price, processed)

  and for[4)]
  - Copper (lower DEL notation + 1 %)
  - Aluminum (aluminum in cables)
  - Lead (lead in cables)
- Metal factor of the products
  Certain products are displayed with a metal factor. The metal factor determines the official price (for those raw materials concerned) as of which the metal surcharges are applied and the calculation method used (weight or percentage method). An exact explanation is given below.

Structure of the metal factor

The metal factor consists of several digits; the first digit indicates whether the percentage method of calculation refers to the list price or a possible discounted price (customer net price) (L = list price / N = customer net price).

The remaining digits indicate the method of calculation used for the respective raw material. If no surcharge is added for a raw material, a "-" is used.

1st digit	List or customer net price using the percentage method
2nd digit	for silver (AG)
3rd digit	for copper (CU)
4th digit	for aluminum (AL)
5th digit	for lead (PB)
6th digit	for gold (AU)
7th digit	for dysprosium (Dy)[2)]
8th digit	for neodym (Nd)[2)]

Weight method

The weight method uses the basic official price, the daily price and the raw material weight. In order to calculate the surcharge, the basic official price must be subtracted from the daily price. The difference is then multiplied by the raw material weight.

The basic official price can be found in the table below using the number (1 to 9) of the respective digit of the metal factor. The raw material weight can be found in the respective product descriptions.

Percentage method

Use of the percentage method is indicated by the letters A-Z at the respective digit of the metal factor.

The surcharge is increased - dependent on the deviation of the daily price compared with the basic official price - using the percentage method in "steps" and consequently offers surcharges that remain constant within the framework of this "step range". A higher percentage rate is charged for each new step. The respective percentage level can be found in the table below.

Metal factor examples

L E A – – – – –

- Basis for % surcharge: List price
- Silver Basis 150 €, Step 50 €, 0.5 %
- Copper Basis 150 €, Step 50 €, 0.1 %
- No surcharge for aluminum
- No surcharge for lead
- No surcharge for gold
- No surcharge for dysprosium
- No surcharge for neodym

N – A 6 – – – –

- Basis for % surcharge: Customer net price
- No surcharge for silver
- Copper Basis 150 €, Step 50 €, 0.1 %
- Aluminum acc. to weight, basic offic. price 225 €
- No surcharge for lead
- No surcharge for gold
- No surcharge for dysprosium
- No surcharge for neodym

– – 3 – – – – –

- No basis necessary
- No surcharge for silver
- Copper acc. to weight, basic official price 150 €
- No surcharge for aluminum
- No surcharge for lead
- No surcharge for gold
- No surcharge for dysprosium
- No surcharge for neodym

1) Refer to the separate explanation on the next page regarding the raw materials dysprosium and neodym (= rare earths).
2) For a different method of calculation, refer to the separate explanation for these raw materials on the next page.
3) Source: Umicore, Hanau (www.metalsmanagement.umicore.com).
4) Source: Schutzvereinigung DEL-Notiz e.V. (www.del-notiz.org).

© Siemens 2022

Explanation of the raw material/metal surcharges for dysprosium and neodym (rare earths)

Surcharge calculation

To compensate for variations in the price of the raw materials silver[1], copper[1], aluminum[1], lead[1], gold[1], dysprosium and/or neodym, surcharges are calculated on a daily basis using the so-called metal factor for products containing these raw materials. The surcharge for dysprosium and neodym is calculated as a supplement to the price of a product if the basic official price of the raw material in question is exceeded.

The surcharge is calculated in accordance with the following criteria:

- Basic official price of the raw material[2]
  Three-month basic average price (see below) in the period before the quarter in which the order was received or the release order took place (= average official price) for
  - dysprosium (Dy metal, 99 % min. FOB China; USD/kg)
  - neodym (Nd metal, 99 % min. FOB China; USD/kg)
- Metal factor of the products
  Certain products are displayed with a metal factor. The metal factor indicates (for those raw materials concerned) the basic official price as of which the surcharges for dysprosium and neodym are calculated using the weight method. An exact explanation of the metal factor is given below.

Three-month average price

The prices of rare earths vary according to the foreign currency, and there is no freely accessible stock exchange listing. This makes it more difficult for all parties involved to monitor changes in price. In order to avoid continuous adjustment of the surcharges, but to still ensure fair, transparent pricing, an average price is calculated over a three-month period using the average monthly foreign exchange rate from USD to EUR (source: European Central Bank). Since not all facts are immediately available at the start of each month, a one-month buffer is allowed before the new average price applies.

Examples of calculation of the average official price:

Period for calculation of the average price:	Period during which the order/release order is effected and the average price applies:
Sep 2012 - Nov 2012	Q1 in 2013 (Jan - Mar)
Dec 2012 - Feb 2013	Q2 in 2013 (Apr - Jun)
Mar 2013 - May 2013	Q3 in 2013 (Jul - Sep)
Jun 2013 - Aug 2013	Q4 in 2013 (Oct - Dec)

Structure of the metal factor

The metal factor consists of several digits; the first digit is not relevant to the calculation of dysprosium and neodym.

The remaining digits indicate the method of calculation used for the respective raw material. If no surcharge is added for a raw material, a "-" is used.

1st digit	List or customer net price using the percentage method
2nd digit	for silver (AG)[1]
3rd digit	for copper (CU)[1]
4th digit	for aluminum (AL)[1]
5th digit	for lead (PB)[1]
6th digit	for gold (AU)[1]
7th digit	for dysprosium (Dy)
8th digit	for neodym (Nd)

Weight method

The weight method uses the basic official price, the average price and the raw material weight. In order to calculate the surcharge, the basic official price must be subtracted from the average price. The difference is then multiplied by the raw material weight.

The basic official price can be found in the table below using the number (1 to 9) of the respective digit of the metal factor. Your Sales contact can inform you of the raw material weight.

Metal factor examples

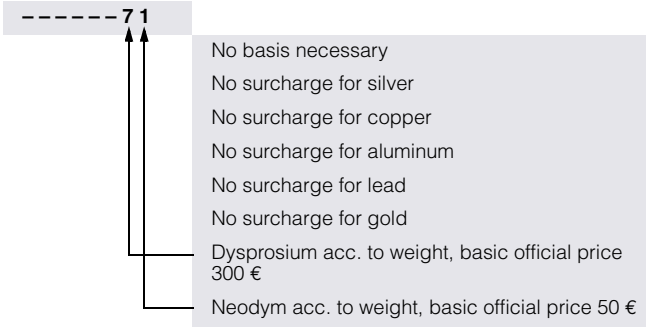

[1] For a different method of calculation, refer to the separate explanation for these raw materials on the previous page.

[2] Source: Asian Metal Ltd (www.asianmetal.com)

© Siemens 2022

Appendix

Metal surcharges

Values of the metal factor

Percentage method	Basic official price in €	Step range in €	% surcharge 1st step	% surcharge 2nd step	% surcharge 3rd step	% surcharge 4th step	% surcharge per additional step
			Price in €	Price in €	Price in €	Price in €	
			150.01 - 200.00	200.01 - 250.00	250.01 - 300.00	300.01 - 350.00	
A	150	50	0.1	0.2	0.3	0.4	0.1
B	150	50	0.2	0.4	0.6	0.8	0.2
C	150	50	0.3	0.6	0.9	1.2	0.3
D	150	50	0.4	0.8	1.2	1.6	0.4
E	150	50	0.5	1.0	1.5	2.0	0.5
F	150	50	0.6	1.2	1.8	2.4	0.6
G	150	50	1.0	2.0	3.0	4.0	1.0
H	150	50	1.2	2.4	3.6	4.8	1.2
I	150	50	1.6	3.2	4.8	6.4	1.6
J	150	50	1.8	3.6	5.4	7.2	1.8
			175.01 - 225.00	225.01 - 275.00	275.01 - 325.00	325.01 - 375.00	
O	175	50	0.1	0.2	0.3	0.4	0.1
P	175	50	0.2	0.4	0.6	0.8	0.2
R	175	50	0.5	1.0	1.5	2.0	0.5
			225.01 - 275.00	275.01 - 325.00	325.01 - 375.00	375.01 - 425.00	
S	225	50	0.2	0.4	0.6	0.8	0.2
U	225	50	1.0	2.0	3.0	4.0	1.0
V	225	50	1.0	1.5	2.0	3.0	1.0
W	225	50	1.2	2.5	3.5	4.5	1.0
			150.01 - 175.00	175.01 - 200.00	200.01 - 225.00	225.01 - 250.00	
Y	150	25	0.3	0.6	0.9	1.2	0.3
			400.01 - 425.00	425.01 - 450.00	450.01 - 475.00	475.01 - 500.00	
Z	400	25	0.1	0.2	0.3	0.4	0.1
	Price basis (1st digit)						
L	Calculation based on the list price						
N	Calculation based on the customer net price (discounted list price)						
Weight method	**Basic official price in €**						
1	50	Calculation based on raw material weight					
2	100						
3	150						
4	175						
5	200						
6	225						
7	300						
8	400						
9	555						
Miscellaneous							
-	No metal surcharge						

© Siemens 2022

1. General Provisions

By using this catalog you can purchase products (hardware, software and services) described therein from Siemens Aktiengesellschaft subject to the following Terms and Conditions of Sale and Delivery (hereinafter referred to as "T&C"). Please note that the scope, the quality and the conditions for supplies and services, including software products, by any Siemens entity having a registered office outside Germany, shall be subject exclusively to the General Terms and Conditions of the respective Siemens entity. The following T&C apply exclusively for orders placed with Siemens Aktiengesellschaft, Germany.

1.1 For customers with a seat or registered office in European Union

For customers with a seat or registered office in European Union, the following terms and conditions apply subordinate to T&C:

- for products, which include specific terms and conditions in the description text, these specific terms and conditions shall apply and subordinate thereto,
- for stand-alone software products and software products forming a part of a product or project, the "General License Conditions for Software Products for Automation and Drives for Customers with a Seat or registered Office in Germany"[1)] and/or
- for consulting services the “Allgemeine Geschäftsbedingungen für Beratungsleistungen der Division DF – Deutschland” (available only in German) and/or
- for other services, the „Supplementary Terms and Conditions for Services (“BL”)[1)] and/or
- for other supplies the "General Conditions for the Supply of Products and Services of the Electrical and Electronics Industry"[1)].
  In case such supplies should contain Open Source Software, the conditions of which shall prevail over the "General Conditions for the Supply of Products and Services of the Electrical and Electronics Industry"[1)], a notice will be contained in the scope of delivery in which the applicable conditions for Open Source Software are specified. This shall apply mutatis mutandis for notices referring to other third party software components.

1.2 For customers with a seat or registered office outside European Union

For customers with a seat or registered office outside European Union, the following terms and conditions apply subordinate to T&C:

- for products, which include specific terms and conditions in the description text, these specific terms and conditions shall apply and subordinate thereto,
- for consulting services the "Standard Terms and Conditions for Consulting Services of the Division DF for Customers with a Seat or Registered Office Outside of Germany"[1)] and/or
- for other services the "International Terms & Conditions for Services"[1)] supplemented by "Software Licensing Conditions"[1)] and/or
- for other supplies of hard- and software the "International Terms & Conditions for Products"[1)] supplemented by "Software Licensing Conditions"[1)]

1.3 For customers with master or framework agreement

To the extent our supplies and/or services offered are covered by an existing master or framework agreement, the terms and conditions of that agreement shall apply instead of T&C.

2. Prices

The prices are in € (Euro) ex point of delivery, exclusive of packaging.

The sales tax (value added tax) is not included in the prices. It shall be charged separately at the respective rate according to the applicable statutory legal regulations.

Prices are subject to change without prior notice. We will charge the prices valid at the time of delivery.

To compensate for variations in the price of raw materials (e.g. silver, copper, aluminum, lead, gold, dysprosium and neodym), surcharges are calculated on a daily basis using the so-called metal factor for products containing these raw materials.
A surcharge for the respective raw material is calculated as a supplement to the price of a product if the basic official price of the raw material in question is exceeded.

The metal factor of a product indicates the basic official price (for those raw materials concerned) as of which the surcharges on the price of the product are applied, and with what method of calculation.

You will find a detailed explanation of the metal factor on the page headed "Metal surcharges".

To calculate the surcharge (except in the cases of dysprosium and neodym), the official price from the day prior to that on which the order was received or the release order was effected is used.

To calculate the surcharge applicable to dysprosium and neodym ("rare earths"), the corresponding three-month basic average price in the quarter prior to that in which the order was received or the release order was effected is used with a one-month buffer (details on the calculation can be found in the explanation of the metal factor).

3. Additional Terms and Conditions

The dimensions are in mm. In Germany, according to the German law on units in measuring technology, data in inches apply only to devices for export.

Illustrations are not binding.

Insofar as there are no remarks on the individual pages of this catalog – especially with regard to data, dimensions and weights given – these are subject to change without prior notice.

[1)] The text of the Terms and Conditions of Siemens AG can be downloaded at
https://mall.industry.siemens.com/legal/ww/en/terms_of_trade_en.pdf

© Siemens 2022

4. Export Regulations

We shall not be obligated to fulfill any agreement if such fulfillment is prevented by any impediments arising out of national or international foreign trade or customs requirements or any embargoes and/or other sanctions.

Export may be subject to license. We shall indicate in the delivery details whether licenses are required under German, European and US export lists.

Our products are controlled by the U.S. Government (when labeled with "ECCN" unequal "N") and authorized for export only to the country of ultimate destination for use by the ultimate consignee or end-user(s) herein identified. They may not be resold, transferred, or otherwise disposed of, to any other country or to any person other than the authorized ultimate consignee or end-user(s), either in their original form or after being incorporated into other items, without first obtaining approval from the U.S. Government or as otherwise authorized by U.S. law and regulations. Products labeled with "AL" unequal "N" are subject to European / national export authorization.

The export indications can be viewed in advance in the description of the respective goods on the Industry Mall, our online catalog system. Only the export labels "AL" and "ECCN" indicated on order confirmations, delivery notes and invoices are authoritative.

Products without label, with label "AL:N" / "ECCN:N", or label "AL:9X9999" / "ECCN: 9X9999" may require authorization from responsible authorities depending on the final end-use, or the destination.

If you transfer goods (hardware and/or software and/or technology as well as corresponding documentation, regardless of the mode of provision) delivered by us or works and services (including all kinds of technical support) performed by us to a third party worldwide, you shall comply with all applicable national and international (re-)export control regulations. In any event of such transfer of goods, works and services you shall comply with the (re-) export control regulations of the Federal Republic of Germany, of the European Union and of the United States of America.

Prior to any transfer of goods, works and services provided by us to a third party you shall in particular check and guarantee by appropriate measures that

- there will be no infringement of an embargo imposed by the European Union, by the United States of America and/ or by the United Nations by such transfer, by brokering of contracts concerning those goods, works and services or by provision of other economic resources in connection with those goods, works and services, also considering the limitations of domestic business and prohibitions of by-passing those embargos;
- such goods, works and services are not intended for use in connection with armaments, nuclear technology or weapons, if and to the extent such use is subject to prohibition or authorization, unless required authorization is provided;
- the regulations of all applicable Sanctioned Party Lists of the European Union and the United States of America concerning the trading with entities, persons and organizations listed therein are considered.

If required to enable authorities or us to conduct export control checks, you, upon request by us, shall promptly provide us with all information pertaining to the particular end customer, the particular destination and the particular intended use of goods, works and services provided by us, as well as any export control restrictions existing.

You acknowledge that under the EU embargo regulations against Iran, Syria and Russia respectively the sale of certain listed goods and related services is subject to authorization by the competent export control authorities of the European Union. If (i) the goods or services ordered by you are destined for Iran, Syria or Russia, and (ii) the contract for our supplies and/or services is subject to prior authorization of the competent export control authorities of the European Union, the contract between you and us shall come into force in this respect only upon granting of such authorization.

The products listed in this catalog may be subject to European/German and/or US export regulations. Any export requiring approval is therefore subject to authorization by the relevant authorities.

Errors excepted and subject to change without prior notice.

© Siemens 2022

Easy product selection and ordering: Industry Mall

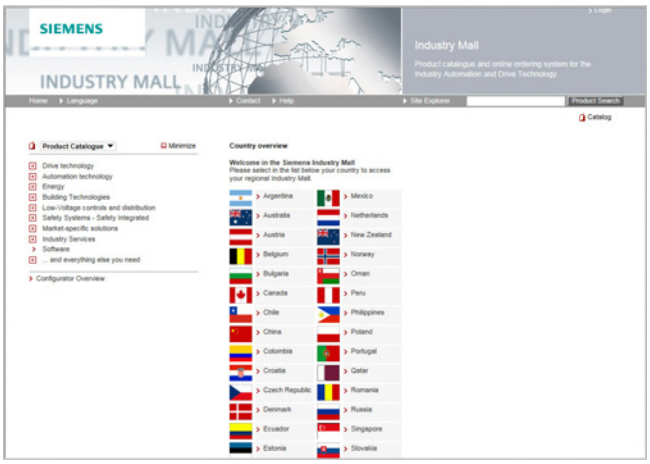

Industry Mall

The Industry Mall is a Siemens AG internet ordering platform. It provides you with online access to a comprehensive product spectrum that is presented in an informative, well-organized way.

Powerful search functions help you select the required products, while configurators enable you to configure complex product and system components quickly and easily. CAx data are also available for you to use.

Data transfer allows the entire procedure, from selection through ordering to tracking and tracing, to be carried out online. Availability checks, individual customer discounting, and quotation preparation are also possible.

www.siemens.com/industrymall

Downloading catalogs

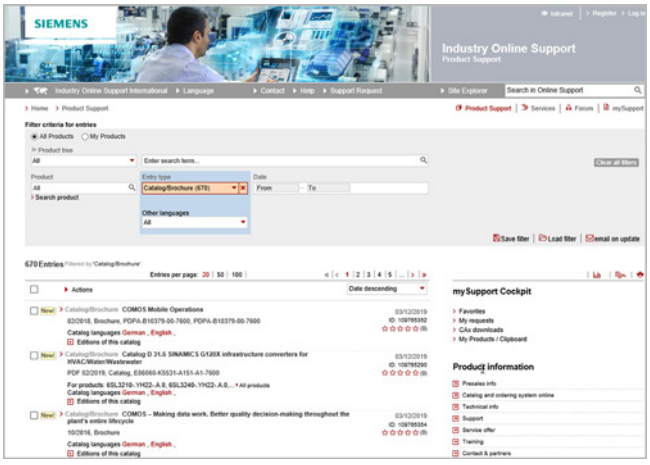

Siemens Industry Online Support

You can download catalogs and brochures in PDF format from Siemens Industry Online Support without having to register.

The filter box makes it possible to perform targeted searches.

www.siemens.com/industry-catalogs

Ordering printed catalogs

Please contact your local Siemens branch if you are interested in ordering printed catalogs.
Addresses can be found at
www.siemens.com/automation-contact

© Siemens 2022

Get more information

SINAMICS S210 servo drive system:
www.siemens.com/sinamics-s210

SIMOTICS electric motors:
www.siemens.com/simotics

Motion Control Systems and Solutions for production machine and machine tool equipment:
www.siemens.com/motioncontrol

Local partners worldwide:
www.siemens.com/automation-contact

Published by
Siemens AG

Digital Industries
Motion Control
Postfach 31 80
91050 Erlangen, Germany

For the U.S. published by
Siemens Industry Inc.

100 Technology Drive
Alpharetta, GA 30005
United States

PDF (Article No. E86060-K5532-A101-A7-7600)
V6.MKKATA.GMC.170
KG 0222 272 En
Produced in Germany
© Siemens 2022

Security information

Siemens provides products and solutions with industrial security functions that support the secure operation of plants, systems, machines and networks.

In order to protect plants, systems, machines and networks against cyber threats, it is necessary to implement – and continuously maintain – a holistic, state-of-the-art industrial security concept. Siemens' products and solutions constitute one element of such a concept.

Customers are responsible for preventing unauthorized access to their plants, systems, machines and networks. Such systems, machines and components should only be connected to an enterprise network or the internet if and
to the extent such a connection is necessary and only
when appropriate security measures (e.g. firewalls and/or network segmentation) are in place.

For additional information on industrial security measures that may be implemented, please visit
https://www.siemens.com/industrialsecurity

Siemens' products and solutions undergo continuous development to make them more secure. Siemens strongly recommends that product updates are applied as soon as they are available and that the latest product versions are used. Use of product versions that are no longer supported, and failure to apply the latest updates may increase customer's exposure to cyber threats.

To stay informed about product updates, subscribe to the Siemens Industrial Security RSS Feed under
https://www.siemens.com/cert

Subject to changes and errors. The information given in this document only contains general descriptions and/or performance features which may not always specifically reflect those described, or which may undergo modification in the course of further development of the products. The requested performance features are binding only when they are expressly agreed upon in the concluded contract.

All product designations may be trademarks or other rights of Siemens AG, its affiliated companies or other companies whose use by third parties for their own purposes could violate the rights of the respective owner.